8410

(Gas/LPG)

(000000-)

Sweeper-Scrubber Parts Manual

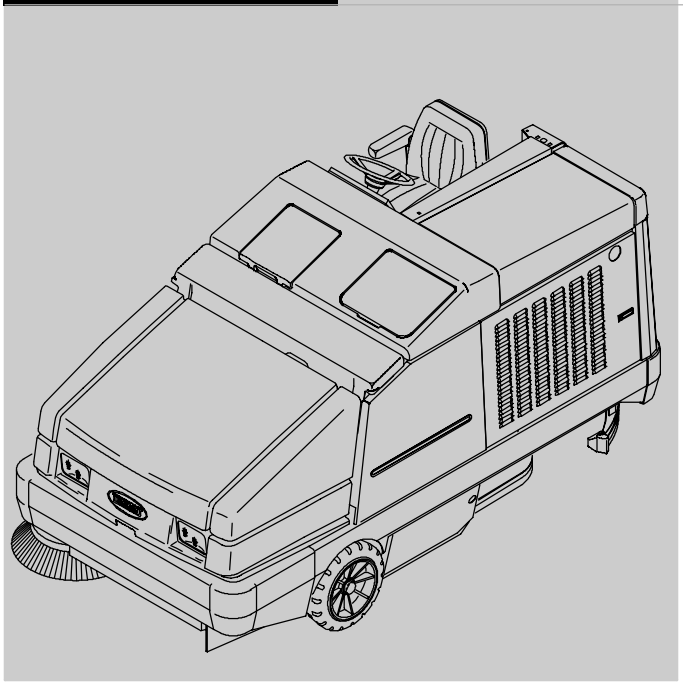

The Safe Scrubbing Alternative

ES® Extended Scrub System

North America / International

MM390
Rev. 15 (05-2007)

www.tennantco.com

When ordering replacement parts, use the illustrated parts list section in this manual. Before ordering parts or supplies, be sure to have your machine model number and serial number available. Only use TENNANT Company supplied or equivalent parts. Parts and supplies may be ordered online, by phone, or mail from any authorized parts and service center, distributor or from any of the manufacturer's subsidiaries.

This machine will provide excellent service. However, the best results will be obtained at minimum costs if:

- The machine is operated with reasonable care.
- The machine is maintained regularly - per the machine maintenance instructions provided.
- The machine is maintained with manufacturer supplied or equivalent parts.

MACHINE DATA

Please fill out at time of installation for future reference.

Model No. – _____

Serial No. – _____

Machine Options – _____

Sales Rep. – _____

Sales Rep. phone no. – _____

Customer Number – _____

Installation Date – _____

Tennant Company
PO Box 1452
Minneapolis, MN 55440
Phone: (800) 553-8033 or (763) 513-2850
www.tennantco.com

Thermo-Sentry and FaST-PAK are US registered and unregistered trademarks of Tennant Company.

Specifications and parts are subject to change without notice.

Copyright © 1996, 1997, 1999 - 2006, 2007 TENNANT Company, Printed in U.S.A.

HOW TO USE THIS MANUAL

This section on *HOW TO USE THIS MANUAL* will tell you how to:

- Find important machine information for ordering correct repair parts.
- Find TENNANT part numbers.
- Order TENNANT parts and supplies.

IMPORTANT INFORMATION

When placing an order for parts, the machine model and machine serial number are important. Refer to the *MACHINE DATA* box which is filled out during the installation of your machine. The *MACHINE DATA* box is located on the inside of the front cover of this manual.

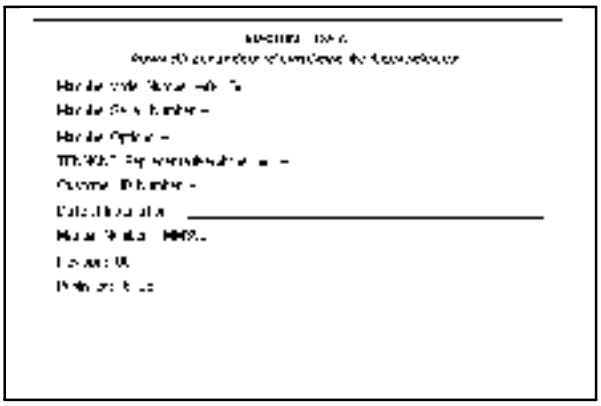

The model number of your machine is on the side of the machine.

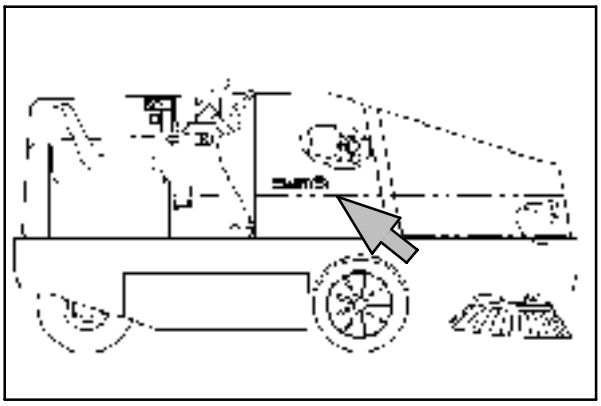

The serial number of your machine is printed on the machine data plate located as shown.

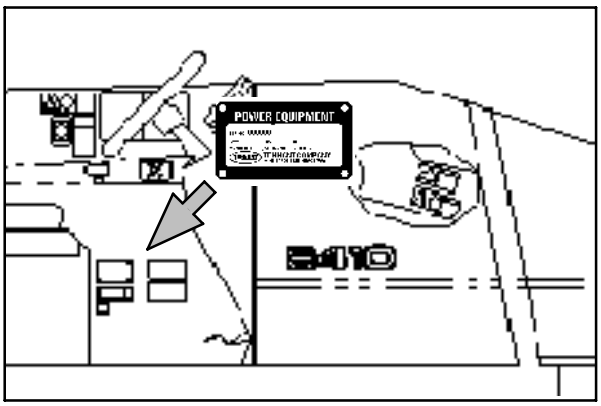

FINDING A TENNANT PART NUMBER

This manual contains the following sections:

- HOW TO USE THIS MANUAL
- STANDARD PARTS
- OPTIONS
- BREAKDOWNS
- CROSS REFERENCE

The STANDARD PARTS section lists repair parts for standard machines. They are grouped in this general order:

- General wear parts.
- Machine frame and related parts.
- Machine propelling system.
- Scrubbing components.
- Electrical parts.

The OPTION section lists repair parts of options.

The BREAKDOWN section lists available repair parts of major components.

All sections in this manual consist of parts illustrations and corresponding parts lists.

The parts illustrations are numbered with ***Ref*** numbers which refer to corresponding parts lists.

The parts lists include a number of columns of information:

- ***Ref*** – column refers to the reference number on the parts illustration.
  ∇ – indicates the part is an assembly.
  ▲ – indicates the part is included in the assembly listed just before it.

- ***TENNANT Part No.*** – column lists the TENNANT part number for the part.

- ***Serial Number*** – column indicates the set of machines the part number is applicable to. Serial numbers change when the machine design has been modified. The most current design of the machine is shown in the main illustration, older designs are boxed in a corner of the illustration.

- ***Description*** – column is a brief description of the part.

- ***Qty.*** – column lists the quantity of that part used in that area of the machine.

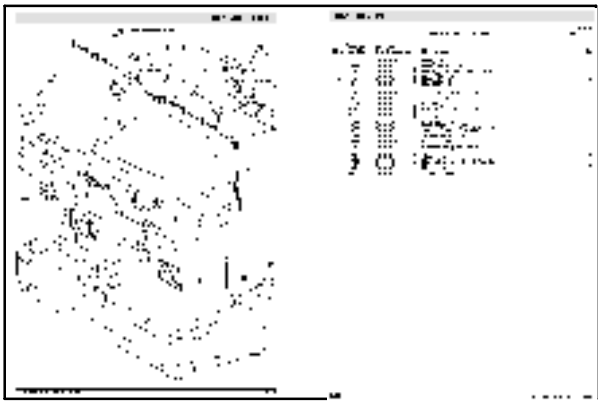

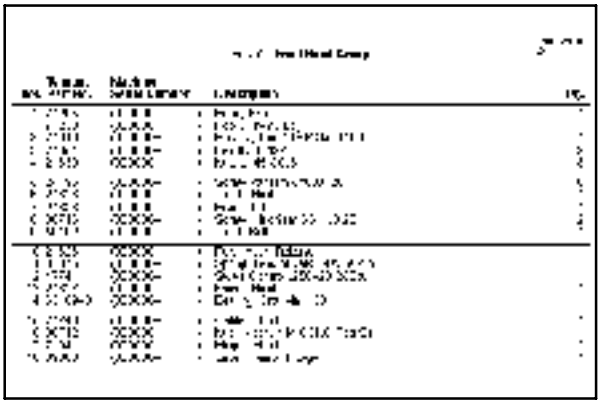

NOTE: If a service kit is installed on your machine, be sure to keep the INSTRUCTION BULLETIN which came with the kit. It contains repair parts numbers needed for ordering future parts.

NOTE: Fasteners used in this machine may be metric or non-metric. Take care when replacing hardware to replace with same thread size.

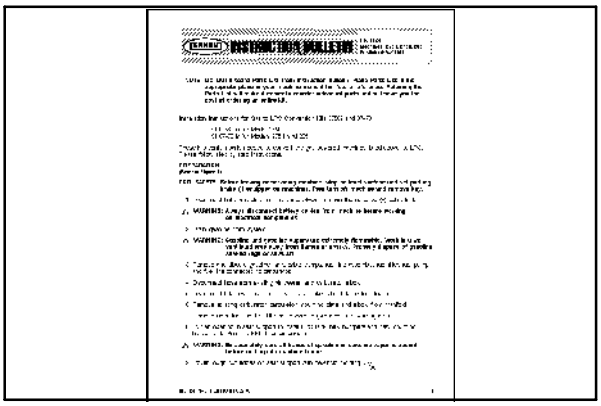

PLACING AN ORDER

Orders may be placed by phone, fax, or by mail. Phone orders may need written confirmation. Follow the steps below to insure prompt delivery:

1. Identify the model number of your machine.
2. Identify the serial number of your machine.
3. Find the part number of the part you need. Do not order by page number or reference number. If you are not able to find the part number, call your TENNANT representative for help or send the old part as a sample.
4. Determine the quantity of the part you need.
5. Provide the following company information:
   - Company name
   - Customer ID Number
   - Shipping address
   - Billing address
   - First and last name of person ordering parts
   - Telephone number
   - Purchase order number
6. Provide definitive shipping instructions.

Any claim for loss or damage to a shipment in transit should be filed promptly with the transportation company making the delivery. Shipments will be complete unless the packing list or order acknowledgement indicates items back ordered.

If parts received are suspected to be incorrect or defective, please contact the TENNANT representative from whom you ordered the part. They will give authorization for return and/or handle replacement shipments when required.

SECTION 2

Contents **Page**

Fig. 1 – General Recommended Maintenance Items 2-3
Fig. 2 – Brushes, Replacement 2-4
Fig. 3 – Main Frame And Skirt Group 2-6
Fig. 4 – Main Frame Left Brush Door Group 2-8
Fig. 5 – Main Frame Right Brush Door Group . . 2-10
Fig. 6 – Main Frame Seat and Shroud Group . . 2-12
Fig. 7 – Main Frame Engine Side Door and Cover Group 2-14
Fig. 8 – Main Frame Tank Panel Group 2-16
Fig. 9 – Hopper Lift Arms Group 2-18
Fig. 10 – Hopper and Dump Door Group 2-20
Fig. 11 – Hopper Hood and Bumper Group 2-22
Fig. 12 – Hopper Filter Box Group 2-24
Fig. 13 – Hopper Cylinder and Dust Door Group 2-26
Fig. 14 – Hopper Solenoid Valve Group 2-28
Fig. 15 – Vacuum Fan Group, Sweeper 2-30
Fig. 16 – Hopper Pressure Switch Group 2-32
Fig. 17 – Engine and Alternator Group (000000–013227) 2-34
Fig. 18 – Engine Mount Group (000000–013227) 2-36
Fig. 19 – Engine Group (013228–013999) 2-38
Fig. 20 – Engine Group (014000–014999) 2-40
Fig. 21 – Engine Group (015000–) 2-42
Fig. 22 – Engine Alternator Group (013228–013999) 2-44
Fig. 23 – Engine Alternator Group (014000–014999) 2-46
Fig. 24 – Engine Alternator Group (015000–) 2-48
Fig. 25 – Engine Oil Filter and Drain Group (013228–) 2-50
Fig. 26 – Engine Carburetor & Governor Group, Gasoline (000000–013227) 2-52
Fig. 27 – Engine EFI Group, Gas (013228–013999) 2-54
Fig. 28 – Engine EFI Group, Gas (014000–014999) 2-56
Fig. 29 – Engine Electronic Fuel Ignition Group, Gas (015000–) 2-58
Fig. 30 – Engine Carburetor & Governor Group, LPG (000000–013227) 2-60
Fig. 31 – Engine Vaporizer Group, LPG (000000–013087) 2-62
Fig. 32 – Engine Vaporizer Group, LPG (013088–013227) 2-64
Fig. 33 – Engine EFI and Vaporizer Group, LPG (013228–013999 version 1) 2-66
Fig. 34 – Engine EFI and Vaporizer Group, LPG (013228–013999 version 2) 2-68
Fig. 35 – Engine Electronic Fuel Ignition and Vaporizer Group, LPG (014000–014999) 2-70
Fig. 36 – Engine Electronic Fuel Ignition and Vaporizer Group, LPG (015000–) 2-74
Fig. 37 – Engine Air Cleaner Group (000000–013227) 2-78
Fig. 38 – Engine Air Cleaner Group (013228–013999) 2-80
Fig. 39 – Engine Air Cleaner Group (014000–014999) 2-82
Fig. 40 – Engine Air Cleaner Group (015000–) 2-84
Fig. 41 – Engine Muffler Group (000000–013227) 2-86
Fig. 42 – Engine Muffler Group (013228–013999) 2-88
Fig. 43 – Engine Muffler Group (014000–014999) 2-90
Fig. 44 – Engine Muffler Group (015000–) 2-92
Fig. 45 – Engine Fuel Tank Group, Gasoline (000000–013227) 2-94
Fig. 46 – Engine Fuel Tank Group, Gasoline (013228–013999) 2-96
Fig. 47 – Engine Fuel Tank Group, Gasoline (014000–014999) 2-98
Fig. 48 – Engine Fuel Tank Group, Gasoline (015000–) 2-100
Fig. 49 – Engine Fuel Tank Group, LPG (000000–013227) 2-102
Fig. 50 – Engine Fuel Tank Group, LPG (013228–013999) 2-104
Fig. 51 – Engine Fuel Tank Group, LPG (014000–014999) 2-106
Fig. 52 – Engine Fuel Tank Group, LPG (015000–) 2-108
Fig. 53 – Engine Radiator and Hydraulic Cooler Group (000000–012179) . . . 2-110
Fig. 54 – Engine Radiator and Hydraulic Cooler Group (012180–013227) . . . 2-112
Fig. 55 – Engine Radiator and Hydraulic Cooler Group (013228–) . . . 2-114
Fig. 56 – Engine Radiator Housing and Fan Motor Group (000000–014999) 2-116
Fig. 57 – Engine Radiator Housing and Fan Motor Group (015000–) 2-118
Fig. 58 – Engine Radiator Hose and Hydraulic Filter Group (000000–013227) 2-120
Fig. 59 – Engine Radiator Hose and Hydraulic Filter Group (013228–013999) 2-122
Fig. 60 – Engine Radiator Hose and Hydraulic Filter Group (014000–014999) 2-124
Fig. 61 – Engine Radiator Hose and Hydraulic Filter Group (015000–) 2-126
Fig. 62 – Engine Battery Group 2-128
Fig. 63 – Wheel Group, Rear Drive 2-130
Fig. 64 – Wheels and Brakes Group, Front 2-132
Fig. 65 – Brake Pedals Group 2-134
Fig. 66 – Directional Control Group (000000–013227) 2-136

Contents **Page**

Fig. 67 – Directional Control Group (013228–) 2-138
Fig. 68 – Hydraulic Pumps Group (000000–013227) 2-140
Fig. 69 – Hydraulic Pumps Group (013228–) 2-142
Fig. 70 – Hydraulic Schematic 2-144
Fig. 71 – Hydraulic Hose Group (000000–013227) 2-148
Fig. 72 – Hydraulic Hose Group (000000–013227) 2-150
Fig. 73 – Hydraulic Hose Group (013228–) 2-152
Fig. 74 – Hydraulic Hose Group (013228–) 2-154
Fig. 75 – Hydraulic Reservoir Group 2-156
Fig. 76 – Hydraulic Reservoir Group, LPG (015000–) 2-158
Fig. 77 – Sweeper Main Hydraulic Valve Group 2-160
Fig. 78 – Sweeper Side Brush Lift Group 2-162
Fig. 79 – Sweeper Side Brush Motor and Pivot Group 2-164
Fig. 80 – Sweeper Main Brush Lift Group 2-166
Fig. 81 – Sweeper Main Brush Drive Group . . . 2-168
Fig. 82 – Scrub Brush Frame Group 2-170
Fig. 83 – Scrub Brush Group, Left 2-172
Fig. 84 – Scrub Brush Group, Center 2-174
Fig. 85 – Scrub Brush Group, Right 2-176
Fig. 86 – Scrub Hydraulic Control Solenoid Valve Group 2-178
Fig. 87 – Scrub Right Side Squeegee Group . . 2-180
Fig. 88 – Scrub Left Side Squeegee Group . . . 2-182
Fig. 89 – Scrub Rear Squeegee Linkage Group 2-184
Fig. 90 – Scrub Rear Squeegee Lift Group 2-186
Fig. 91 – Scrub Rear Squeegee Frame Group . 2-188
Fig. 92 – Scrub Solution Control Group (000000–013311) 2-190
Fig. 93 – Scrub Solution Control Group (013312–014211) 2-192
Fig. 94 – Scrub Solution Control Group (014212–) 2-194
Fig. 95 – Scrub Solution Tank Group 2-196
Fig. 96 – Scrub Recovery Tank Group 2-198
Fig. 97 – Scrub Solution and Recovery Tank Drain Group 2-200
Fig. 98 – FaST Solution Pump Group (014215–) 2-202
Fig. 99 – FaST Air Pump and Detergent Group (014215–) 2-204
Fig. 100 – FaST Foam Filter Group (014215–) 2-206
Fig. 101 – FaST Electrical Group (014215–) 2-208
Fig. 102 – Vacuum Fan Group, Scrubber (000000–013227) 2-212
Fig. 103 – Vacuum Fan Group, Scrubber (013228–013999) 2-214

Contents **Page**

Fig. 104 – Vacuum Fan Group, Scrubber (014000–) 2-216
Fig. 105 – Steering Group 2-218
Fig. 106 – Electrical Instrument Panel Assembly Main Group 2-220
Fig. 107 – Electrical Instrument Panel Auxilary Group 2-222
Fig. 108 – Electrical Circuit Breaker and Relay Group 2-224
Fig. 109 – Electrical Schematic (000000–013227) 2-226
Fig. 110 – Electrical Schematic (013228–013999) 2-230
Fig. 111 – Electrical Schematic (014000–014214) 2-236
Fig. 112 – Electrical Schematic (014215–) 2-242
Fig. 113 – Wire Harnesses Group (000000–013227) 2-248
Fig. 114 – Wire Harnesses Group (013228–013999) 2-258
Fig. 115 – Wire Harnesses Group (014000–) 2-266
Fig. 116 – Wire Harnesses Group, Gas/LPG Engine (015000–) 2-279
Fig. 117 – Wire Harnesses Schematic, Gas Engine (015000–) 2-280
Fig. 118 – Wire Harnesses Schematic, LPG Engine (015000–) 2-283
Fig. 119 – Wire Harnesses Group, Gas/LPG, Adaptor (015000–) 2-286
Fig. 120 – Label Group 2-288

10236 - 8410, G, LP

Fig. 1 - General Recommended Maintenance Items

	Ref.	Part No.	Serial Number	Description	Qty.
▽		72067	(000000-)	Maint. Kit, Skirts, 355 Line	1
▲		59687	(000000-)	Seal, Door, Dump, Side	2
▲		59688	(000000-)	Strap, Door, Dump, Side	2
▲		55864	(000000-)	Cord, Sponge	1
▲		59685	(000000-)	Seal, Door, Dump	1
▲		59686	(000000-)	Strap, Door, Dump	1
▽		72068	(000000-)	Maint. Kit, Seals 355 Line	1
▲		59680	(000000-)	Skirt, Lip	1
▲		59681	(000000-)	Skirt, Lip	1
▲		55890	(000000-)	Strap, Main Lip	1
▲		54089	(000000-)	Skirt, Side, Sbdc,	1
▲		54013	(000000-)	Plate, Retainer	1
▲		54014	(000000-)	Plate, Retainer, Front	1
▽		84079	(000000-)	Maint Kit, 400hr [8410 Gas, Ford]	1
▲		60846AM	(000000-)	Spark Plug	4
▲		39703-2	(000000-)	Filter Element,Oil	1
▲		58120	(000000-)	Filter Element, Air	1
▲		36050	(000000-)	Filter, Fuel	1
▲		65221	(000000-)	Element, Filter	1
▲		83692	(000000-)	Belt, V, 46.4l, Cogged [Hc38]	1
▲		84936	(000000-)	Belt, Timing, Cam Fd	1
▲		78730	(000000-)	Cap, Breather, Hyd, 8.5 Ds	1
▲		31613	(000000-)	Strainer, Hyd, 25 Gpm 100 Mesh	1
▽		84080	(000000-)	Maint Kit, 400hr [8410 Lpg, Ford]	1
▲		60846AM	(000000-)	Spark Plug	4
▲		39703-2	(000000-)	Filter Element,Oil	1
▲		58120	(000000-)	Filter Element, Air	1
▲		65221	(000000-)	Element, Filter	1
▲		83692	(000000-)	Belt, V, 46.4l, Cogged [Hc38]	1
▲		84936	(000000-)	Belt, Timing, Cam Fd	1
▲		78730	(000000-)	Cap, Breather, Hyd, 8.5 Ds	1
▲		31613	(000000-)	Strainer, Hyd, 25 Gpm 100 Mesh	1
		73995	(000000-)	Gasket	1
		65869-5	(000000-)	Oil, Hydr. 15/40	2
▽		398346	(000000-)	Maint Kit, 800hr [8410 Gas/Lpg/Dsl]	1
▲		59687	(000000-)	Seal, Door, Dump, Side	2
▲		59688	(000000-)	Strap	2
▲		55864	(000000-)	Seal, Rbr, Clsd, 1.50d 40.3l	1
▲		59686	(000000-)	Strap Bracket	1
▲		59680	(000000-)	Skirt, Neo, .12, 08.00w 40.76l, 05 Sl	1
▲		59681	(000000-)	Skirt, Neo, .18, 04.00w 40.76l, 05 Sl	1
▲		55890	(000000-)	Retainer, Skirt, Hppr, Rear	1
▲		54089	(000000-)	Skirt, Neo, .12, 05.88w 34.32l, 07 H&S	1
▲		54013	(000000-)	Retainer, Skirt, Hppr, Side, Rear	1
▲		54014	(000000-)	Retainer, Skirt, Hppr, Side, Front	1
		1021878	(014215-)	Detergent Pkg, 4 Liter, Sgl [Tco 665]	1

Fig. 2 - Brushes, Replacement

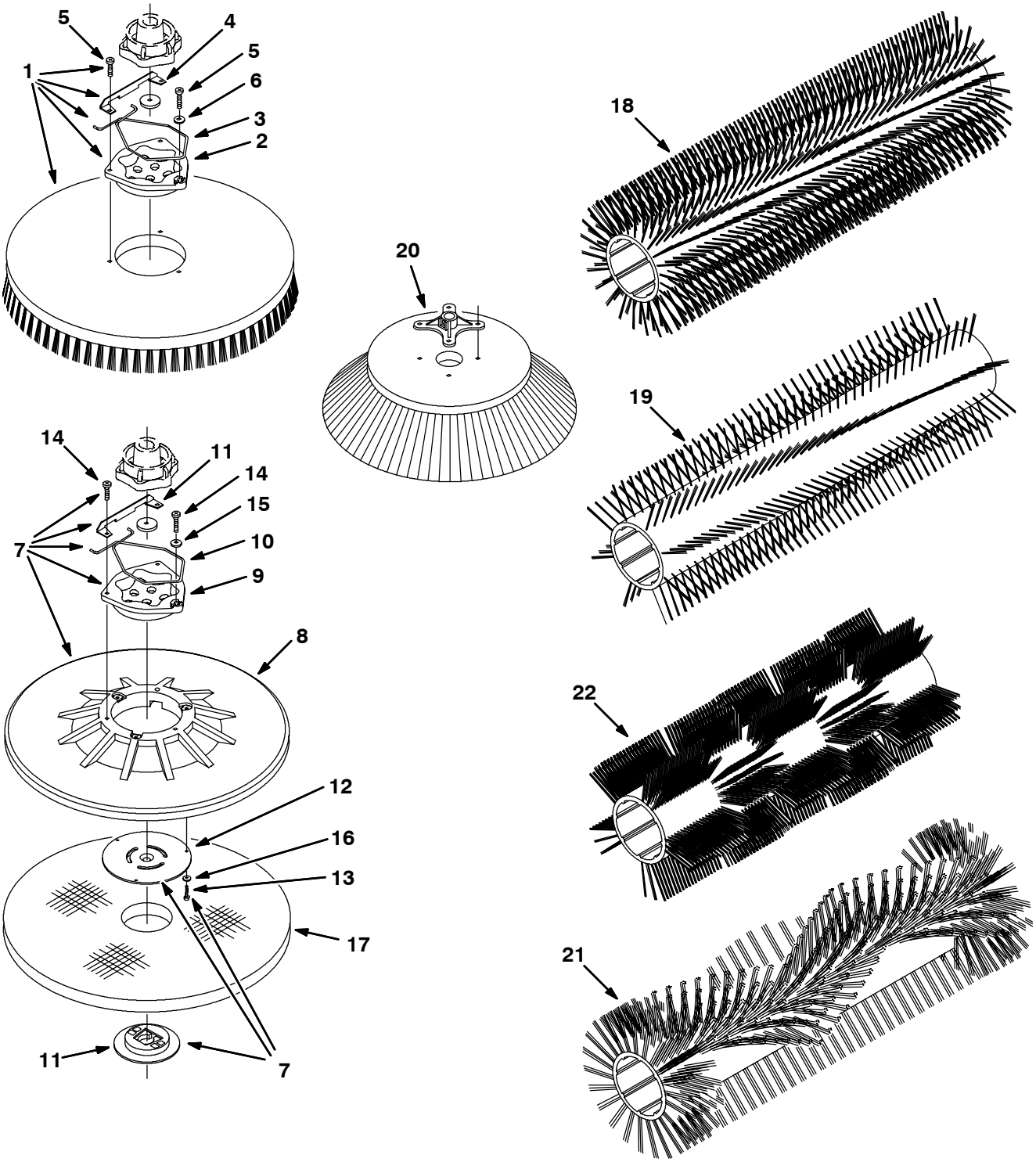

09058 - 8410

	Ref.	Part No.	Serial Number	Description	Qty.
▽	1	05725	(000000–)	Brush Assy, Disk, Scb, 16.0 D, H.D. Polypropylene	3
▲	2	15539	(000000–)	Hub, Drive, Brush, Disk, 3hole 5.8bc[6t]	1
▲	3	14838	(000000–)	Spring, Wir, 0.16d, Brush Retaining	1
▲	4	24299	(000000–)	Bracket, Retainer, Spring	1
▲	5	32746	(000000–)	Screw, Pan, M6 X 1.0 X 35, Ss	3
▲	6	01684	(000000–)	Washer, Flat, 0.25, Ss	1

Fig. 2 - Brushes, Replacement

	Ref.	Part No.	Serial Number	Description	Qty.
▽	1	05724	(000000–)	Brush Assy, Disk, Scb, 16.0 D, Soft Nylon	3
▲	2	15539	(000000–)	Hub, Drive, Brush, Disk, 3hole 5.8bc[6t]	1
▲	3	14838	(000000–)	Spring, Wir, 0.16d, Brush Retaining	1
▲	4	24299	(000000–)	Bracket, Retainer, Spring	1
▲	5	32746	(000000–)	Screw, Pan, M6 X 1.0 X 35, Ss	3
▲	6	01684	(000000–)	Washer, Flat, 0.25, Ss	1
▽	1	05726	(000000–)	Brush Assy, Disk, Scb, 16.0d, Super Abrasive	3
▲	2	15539	(000000–)	Hub, Drive, Brush, Disk, 3hole 5.8bc[6t]	1
▲	3	14838	(000000–)	Spring, Wir, 0.16d, Brush Retaining	1
▲	4	24299	(000000–)	Bracket, Retainer, Spring	1
▲	5	32746	(000000–)	Screw, Pan, M6 X 1.0 X 35, Ss	3
▲	6	01684	(000000–)	Washer, Flat, 0.25, Ss	1
▽	1	05036	(000000–)	Brush Assy, Disk, Scb, 16.0 D, Bassine 500	3
▲	2	15539	(000000–)	Hub, Drive, Brush, Disk, 3hole 5.8bc[6t]	1
▲	3	14838	(000000–)	Spring, Wir, 0.16d, Brush Retaining	1
▲	4	24299	(000000–)	Bracket, Retainer, Spring	1
▲	5	32746	(000000–)	Screw, Pan, M6 X 1.0 X 35, Ss	3
▲	6	01684	(000000–)	Washer, Flat, 0.25, Ss	1
▽	1	30241	(000000–)	Brush Assy, Disk, Scb, 16.0d, Polypropylene	3
▲	2	15539	(000000–)	Hub, Drive, Brush, Disk, 3hole 5.8bc[6t]	1
▲	3	14838	(000000–)	Spring, Wir, 0.16d, Brush Retaining	1
▲	4	24299	(000000–)	Bracket, Retainer, Spring	1
▲	5	32746	(000000–)	Screw, Pan, M6 X 1.0 X 35, Ss	3
▲	6	01684	(000000–)	Washer, Flat, 0.25, Ss	1
▽	7	370016	(000000–)	Disk Assy, Pad Drive, 16d Rep.By397916	3
▲	8	370076	(000000–)	Disk, Pad Drive,W/Face,16d Rep.By397976	1
▲	9	15539	(000000–)	Hub, Drive, Brush, Disk, 3hole 5.8bc[6t]	1
▲	10	14838	(000000–)	Spring, Wir, 0.16d, Brush Retaining	1
▲	11	24299	(000000–)	Bracket, Retainer, Spring	1
▲	12	370090	(000000–)	Retainer, Centering, Pad Rep.By370095	1
▲	13	09198	(000000–)	Screw, Pan, M4 X 0.7 X 35, Ss	3
▲	14	32746	(000000–)	Screw, Pan, M6 X 1.0 X 35, Ss	3
▲	15	01684	(000000–)	Washer, Flat, 0.25, Ss	1
▲	16	41579	(000000–)	Washer, Flat, #08, Ss	3
	17	370092	(000000–)	Pad, Stripping, 16.0d [Hi Prod 1pad=1pc]	3
	17	63248–1	(000000–)	Pad, Stripping, 16.0d, Brown [1pad=1pc]	3
	17	63248–2	(000000–)	Pad, Scb, 16.0d, Blu [1pad=1pc]	3
	17	63248–3	(000000–)	Pad, Buff, 16.0d, Red	3
	17	63248–4	(000000–)	Pad, Polish, 16.0d, White [1pad=1pc]	3
	18	54922	(000000–)	Brush, Swp, Nylon	1
	18	54927	(000000–)	Brush, Swp, Union mix Wire	1
	19	54923	(000000–)	Brush, Swp, Nylon	1
	19	54925	(000000–)	Brush, Swp, Polypropylene & Wire	1
	19	66018	(000000–)	Brush, Swp, Patrol, Nylon	1
	19	66019	(000000–)	Brush, Swp, Polypropylene	1
	19	59440	(000000–)	Brush, Swp, Wire	1
	19	69963	(000000–)	Brush, Swp, Polypropylene & Wire	1
	20	59431	(000000–)	Brush, Disk, Swp, Polypropylene	1
	20	59432	(000000–)	Brush, Disk, Swp, Flat Wire	1
	20	08013N	(000000–)	Brush, Disk, Swp, Nylon	1
	21	370008	(000000–)	Brush, Swp, 45l, Wedge, Polypropylene	1
	22	370009	(000000–)	Brush, Swp, 45l, Wndw, Polypropylene	1

Fig. 3 - Main Frame And Skirt Group

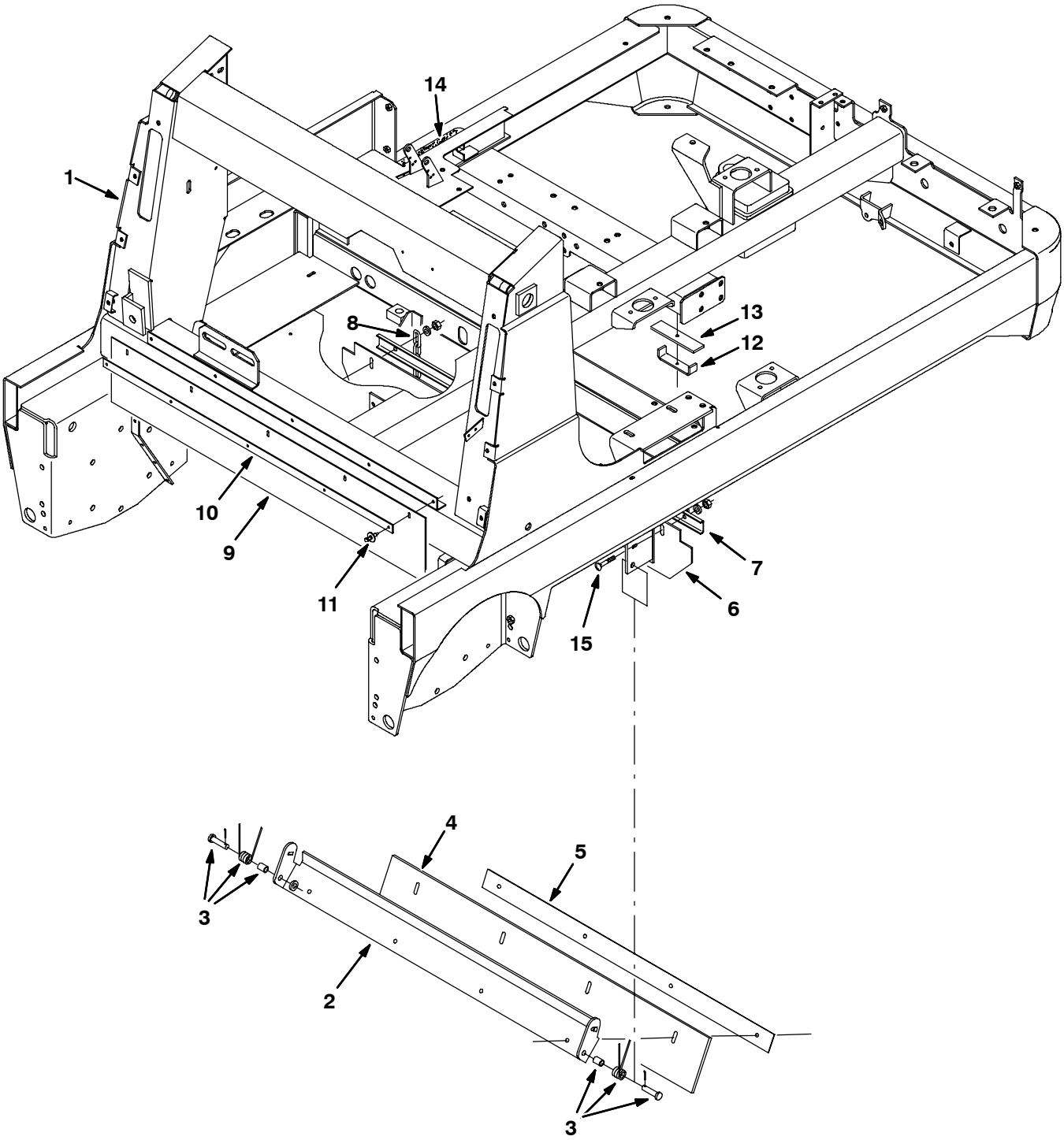

10989 - ALL

Fig. 3 - Main Frame And Skirt Group

Ref.	Part No.	Serial Number	Description	Qty.
1	83725	(000000-)	Frame Wldt	1
2	54182	(000000-)	Bracket, Flap, Recirculation	1
3	69904	(000000-)	Spring Assy, Recirculation	1
4	54190	(000000-)	Blade, Deflector	1
5	54184	(000000-)	Strip, Retainer, Seal	1
6	54197	(000000-)	Skirt, Seal Main Brush	1
7	54192	(000000-)	Channel, Retainer, Seal, Rear	1
8	09342	(000000-)	Chain, Link#2/0, 5 Links Plain	1
9	56872	(000000-)	Skirt,Hoppertop	1
10	56890	(000000-)	Strap, Backing Hopper	1
11	72968	(000000-)	Rivet, Plastic .250X.898	5
12	77297	(000000-)	Bracket, Hose, Clamp Down	1
13	77298	(000000-)	Isolator, Rubber .25X1.50X6.00	1
14	82839	(000000-)	Pad, Tread	1
15	69915	(000000-)	Bolt, Carrm 8X1.25	4

Fig. 4 - Main Frame Left Brush Door Group

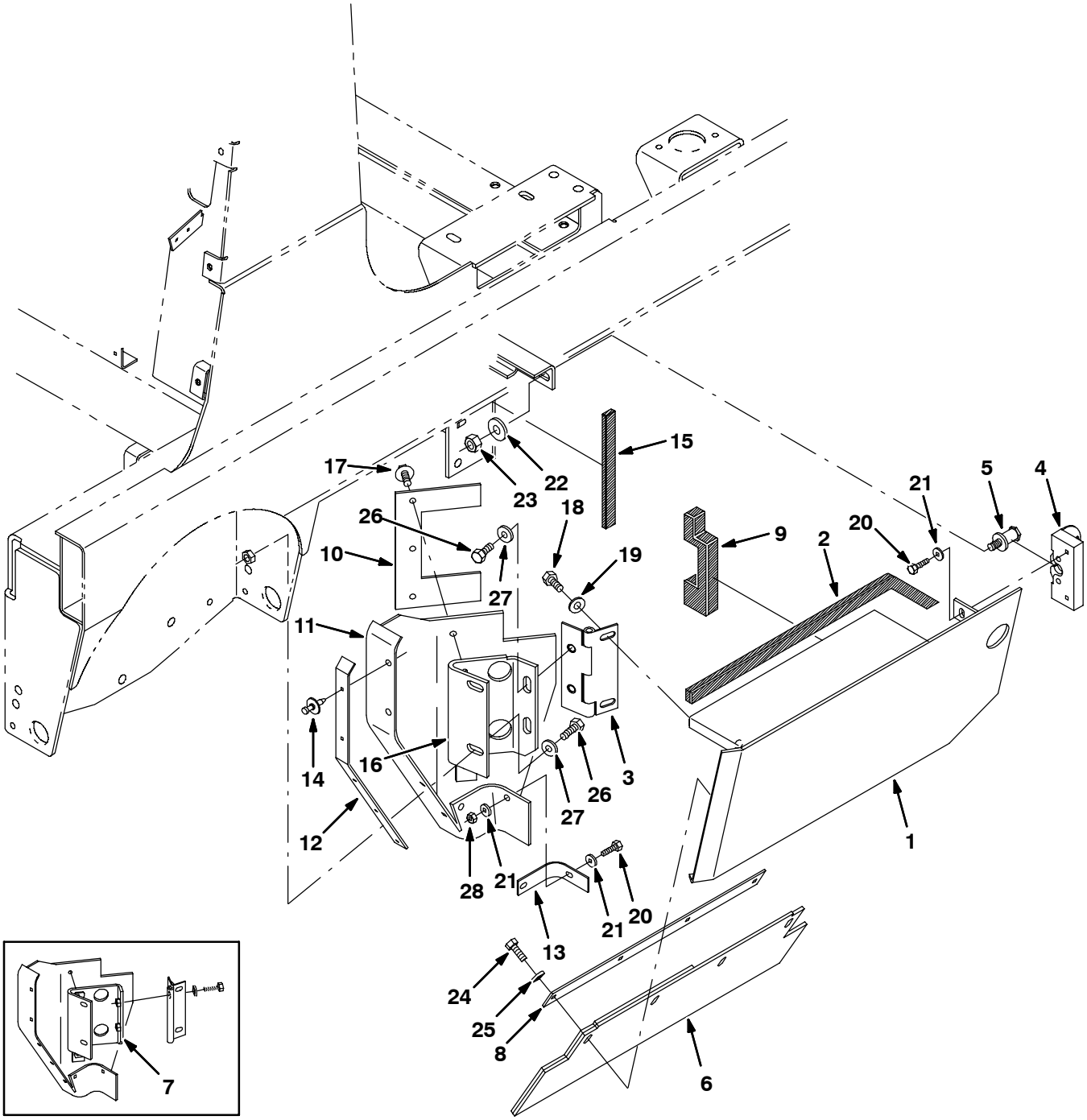

08982 - ALL

Fig. 4 - Main Frame Left Brush Door Group

Ref.	Part No.	Serial Number	Description	Qty.
1	72888	(000000-)	Door Wldt, Brush, Lh	1
2	69931	(000000-)	Seal, Foam Rubber	1
3	72120	(000000-)	Hinge, Door, Brush	1
4	59514	(000000-)	Latch	1
5	59192	(000000-)	Latch, Bolt	1
6	70275	(000000-)	Skirt, Brushdoor	1
7	9001245	(000000-014164)	Bracket Kit, Door Hinge, Ci, Lh	1
8	55433	(000000-)	Strip, Retainer, Skirt	1
9	59538	(000000-)	Seal, Door, Brush	1
10	59692	(000000-)	Strap, Deflector	1
11	72069	(000000-)	Skirt, Deflection	2
12	56914	(000000-)	Strap	2
13	58770	(000000-)	Strip, Retainer	2
14	72968	(000000-)	Rivet, Plastic .250X.898	5
15	375410	(000000-)	Seal, Foam Rubber	1
16	1020530	(014165-)	Bracket, Mtg, Hinge, Lh	1
17	76099	(014165-)	Screw, Hex, M8 X 1.25 X 25, Fmg	3
18	09291	(014165-)	Screw, Hex, M10 X 1.5 X 20, Ss	2
19	01686	(014165-)	Washer, Flat, 0.44b 1.00 .08, Ss	2
20	09007	(014165-)	Screw, Hex, M6 X 1.0 X 25, Ss	4
21	01684	(014165-)	Washer, Flat, 0.25 Ss	6
22	41619	(014165-)	Washer, Flat, 0.56b 1.38d .11, Ss	1
23	07788	(014165-)	Nut, Hex, Std, M12 X 1.75, Ss	1
24	09010	(014165-)	Screw, Hex, M8 X 1.25 X 25, Ss	4
25	01685	(014165-)	Washer, Flat, 0.31 Ss	4
26	09028	(014165-)	Screw, Hex, M10 X 1.5 X 25, Ss	4
27	01686	(014165-)	Washer, Flat, 0.44b 1.00 .08, Ss	4
28	08712	(014165-)	Nut, Hex, Lock, M6 X 1.0, Ss, Nl	2

Fig. 5 - Main Frame Right Brush Door Group

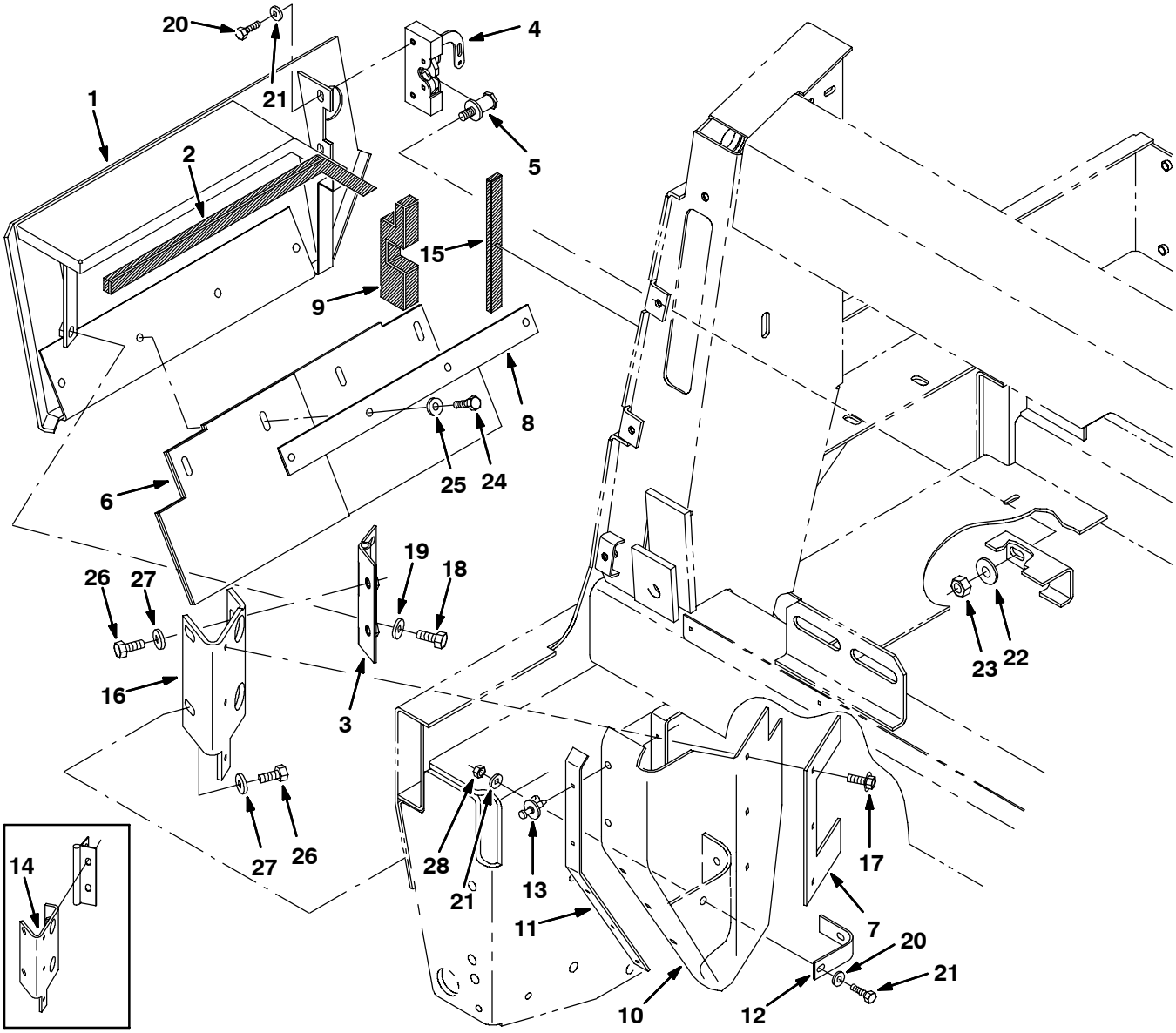

08980 - ALL

Fig. 5 - Main Frame Right Brush Door Group

Ref.	Part No.	Serial Number	Description	Qty.
1	72887	(000000-)	Door Wldt, Brush, Rh	1
2	69931	(000000-)	Seal, Foam Rubber	1
3	72120	(000000-)	Hinge, Door, Brush	1
4	72884	(000000-)	Latch, Hook	1
5	59192	(000000-)	Latch, Bolt	1
6	70276	(000000-)	Skirt, Brushdoor	1
7	59692	(000000-)	Strap, Deflector	1
8	55433	(000000-)	Strip, Retainer, Skirt	1
9	59537	(000000-)	Seal, Door, Brush	1
10	72069	(000000-)	Skirt, Deflection	1
11	56914	(000000-)	Strap	1
12	58770	(000000-)	Strip, Retainer	2
13	72968	(000000-)	Rivet, Plastic .250X.898	5
14	9001246	(000000-014164)	Bracket Kit, Door Hinge, Ci, Rh	1
15	375410	(000000-)	Seal, Foam Rubber	1
16	1019481	(014165-)	Bracket, Mtg, Hinge, Rh	1
17	76099	(014165-)	Screw, Hex, M8 X 1.25 X 25, Fmg	3
18	09291	(014165-)	Screw, Hex, M10 X 1.5 X 20, Ss	2
19	01686	(014165-)	Washer, Flat, 0.44b 1.00 .08, Ss	2
20	09007	(014165-)	Screw, Hex, M6 X 1.0 X 25, Ss	4
21	01684	(014165-)	Washer, Flat, 0.25 Ss	6
22	41619	(014165-)	Washer, Flat, 0.56b 1.38d .11, Ss	1
23	07788	(014165-)	Nut, Hex, Std, M12 X 1.75, Ss	1
24	09010	(014165-)	Screw, Hex, M8 X 1.25 X 25, Ss	4
25	01685	(014165-)	Washer, Flat, 0.31 Ss	4
26	09028	(014165-)	Screw, Hex, M10 X 1.5 X 25, Ss	4
27	01686	(014165-)	Washer, Flat, 0.44b 1.00 .08, Ss	4
28	08712	(014165-)	Nut, Hex, Lock, M6 X 1.0, Ss, Nl	2

Fig. 6 - Main Frame Seat and Shroud Group

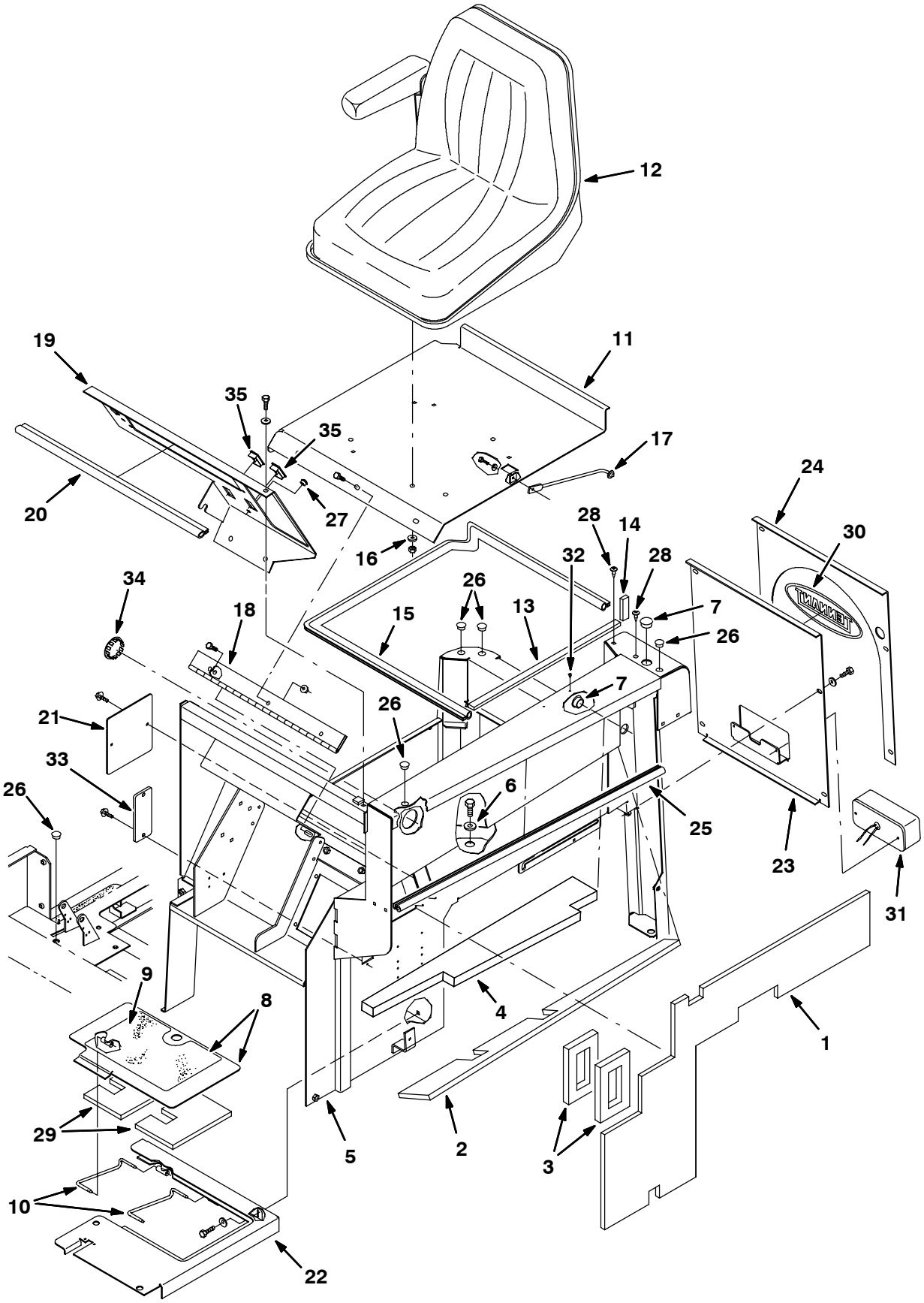

10993 - 8410, G, LP, NA

Fig. 6 - Main Frame Seat and Shroud Group

	Ref.	Part No.	Serial Number	Description	Qty.
	1	84048	(000000-)	Insulation, Acoustic	1
	2	84049	(000000-)	Insulation Acoustic	1
	3	22775	(000000-)	Insulation, Acoustic .75Thk Ec	2
	4	84050	(000000-)	Insulation Acoustic	1
	5	9000595	(000000-)	Shroud Wldt, Station, Oprtr, W/Label	1
	6	13248	(000000-)	Washer .400B 1.12D .12Cr Znc	1
	7	01493	(000000-)	Plugbtn 1.00H .03-.12 Blacknyl	2
▽	8	84098	(000000-)	Cover Wldt, Battery W/Tread	1
▲	9	32270	(000000-)	Tread, Floor, Non-Skid	1
	10	77211	(000000-)	Rod, Hinge	2
	11	83772	(000000-)	Plate, Seat	1
▽	12	77235	(000000-)	Seat, Michigan	1
▲		369810	(000000-)	Kit, Replacement, Armrest	1
▲		388134	(000000-)	Armrest, Molded	1
	13	78855	(000000-)	Seal, Seat, Inner	1
	14	84040	(000000-)	Seal, Ure .50 X .75 X 2.5L	1
	15	84039	(000000-)	Seal, Bulb, Sd-0106 65.00 Lg	1
	16	41186	(000000-)	Washer-Belleville .31 Pltd	4
	17	54615	(000000-)	Rod, Seat	1
	18	75272	(000000-)	Hinge, Seat	1
	19	1022388	(000000-)	Panel, Instmt, Upper, [8410]	1
	20	84041	(000000-)	Seal, Bulb, Sd-0168 25.00 Lg	1
	21	83822	(000000-)	Cover, Linkage, Brush Pressure, Ce	1
	22	10620	(000000-)	Plate Wldt, Floor	1
	23	10642	(000000-)	Door, Rear, Rh	1
	24	10644	(000000-)	Door, Rear, Lpg, Rh	1
	25	83842	(000000-)	Seal, Bulb, Sd-0106 36.10 Lg	1
	26	01314	(000000-)	Plugbtn .38H .03-.12 Blacknyl	5
	27	56992	(000000-)	Plugbtn .50H .03-.12 Blacknyl	1
	28	72970	(000000-)	Rivet, Plastic .250Dx.898	2
	29	72814	(000000-)	Insulation, Acoustic	2
	30	09806	(000000-)	Label, Tennant Logo-10.5 Blue	1
84030 ~~▽~~	31	~~59949~~	(000000-)	Taillight Assy	1
~~▲~~		~~45780~~	~~(000000-)~~	~~Bulb, 12V .5A~~	~~1~~
	32	02731	(000000-)	Canoe Clip	2
	33	22746	(000000-)	Pane, Plstc	1
	34	47178-6	(014215-)	Button, Plug, 2.00h .04-.19 [Chm Stl]	1
	35	762521	(014215-)	Plug, Panl, Switch	2

Fig. 7 - Main Frame Engine Side Door and Cover Group

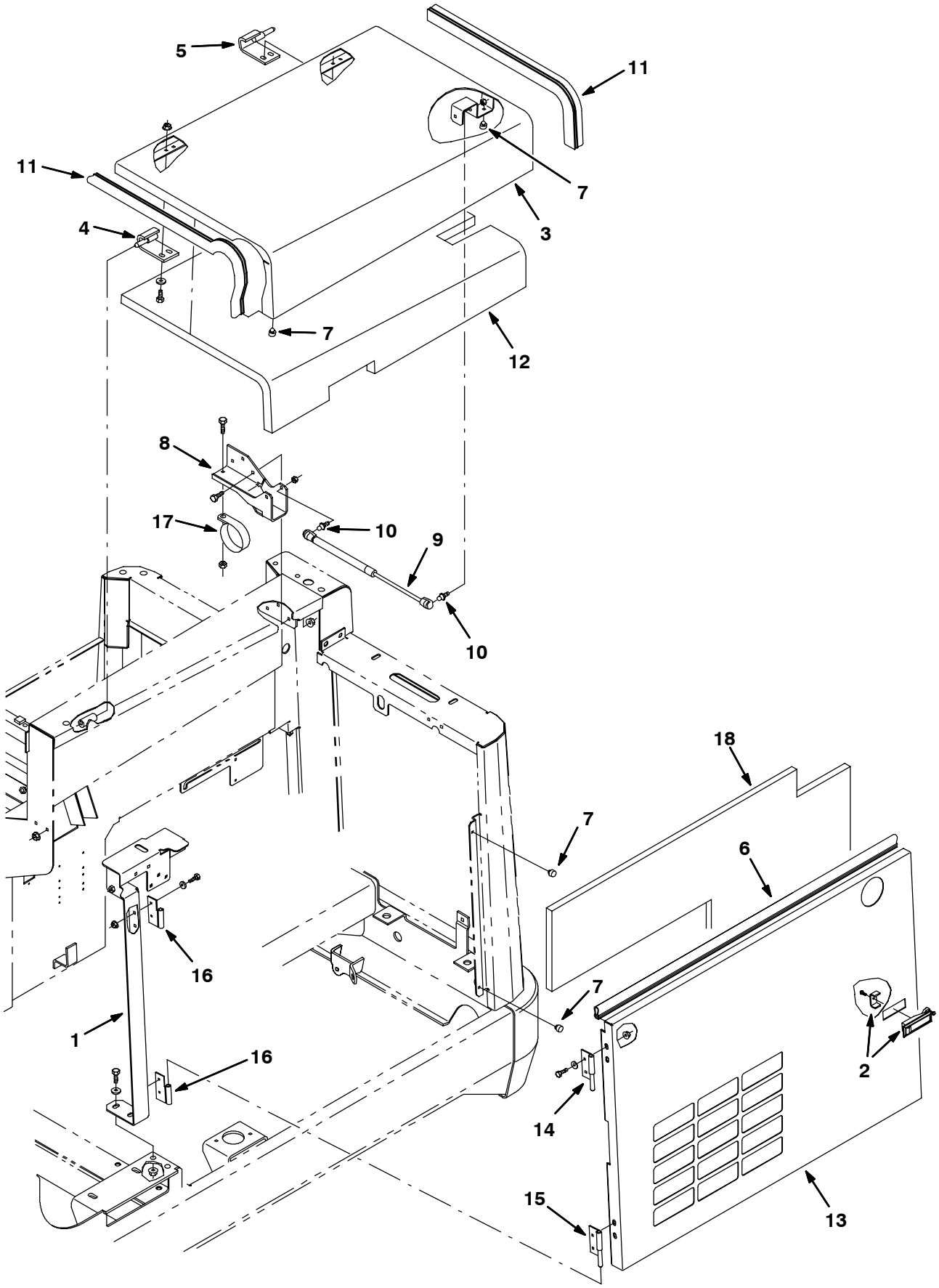

11005 - ALL

Fig. 7 - Main Frame Engine Side Door and Cover Group

Ref.	Part No.	Serial Number	Description	Qty.
1	84065	(000000-)	Angle Wldt, Panel	1
2	64533	(000000-)	Latch, Trigger	1
3	83827	(000000-)	Cover Wldt, Engine, Top	1
4	83816	(000000-)	Hinge Wldt, W/Pin Engine Cover	1
5	83839	(000000-)	Hinge Wldt, W/Pin Engine Cover	1
6	83843	(000000-)	Seal, Bulb, Sd-0504 40.25 Lg	1
7	51787	(000000-)	Bumper, Rubber	4
8	83856	(000000-)	Bracket, Mtg, Gas Spring	1
9	84018	(000000-)	Spring-Gas 90Lb 5.98Stroke	1
10	58494	(000000-)	Stud, Ball, Gas Spring	2
11	84035	(000000-)	Seal, Bulb, Sd-0504 27.12 Lg	2
12	83873	(000000-)	Insulation, S/Foam	1
13	1013944	(000000-)	Door, Eng, Side	1
14	70628	(000000-)	Hinge, W/Pin	1
15	64543	(000000-)	Hinge, W/Pin	1
16	64545	(000000-)	Hinge	2
17	34312	(000000-)	Clamp, Loop, 3.0 I.D.	1
18	1014136	(000000-)	Insulation, Acstc, 0.8 27.6w 40.7l	1

Fig. 8 - Main Frame Tank Panel Group

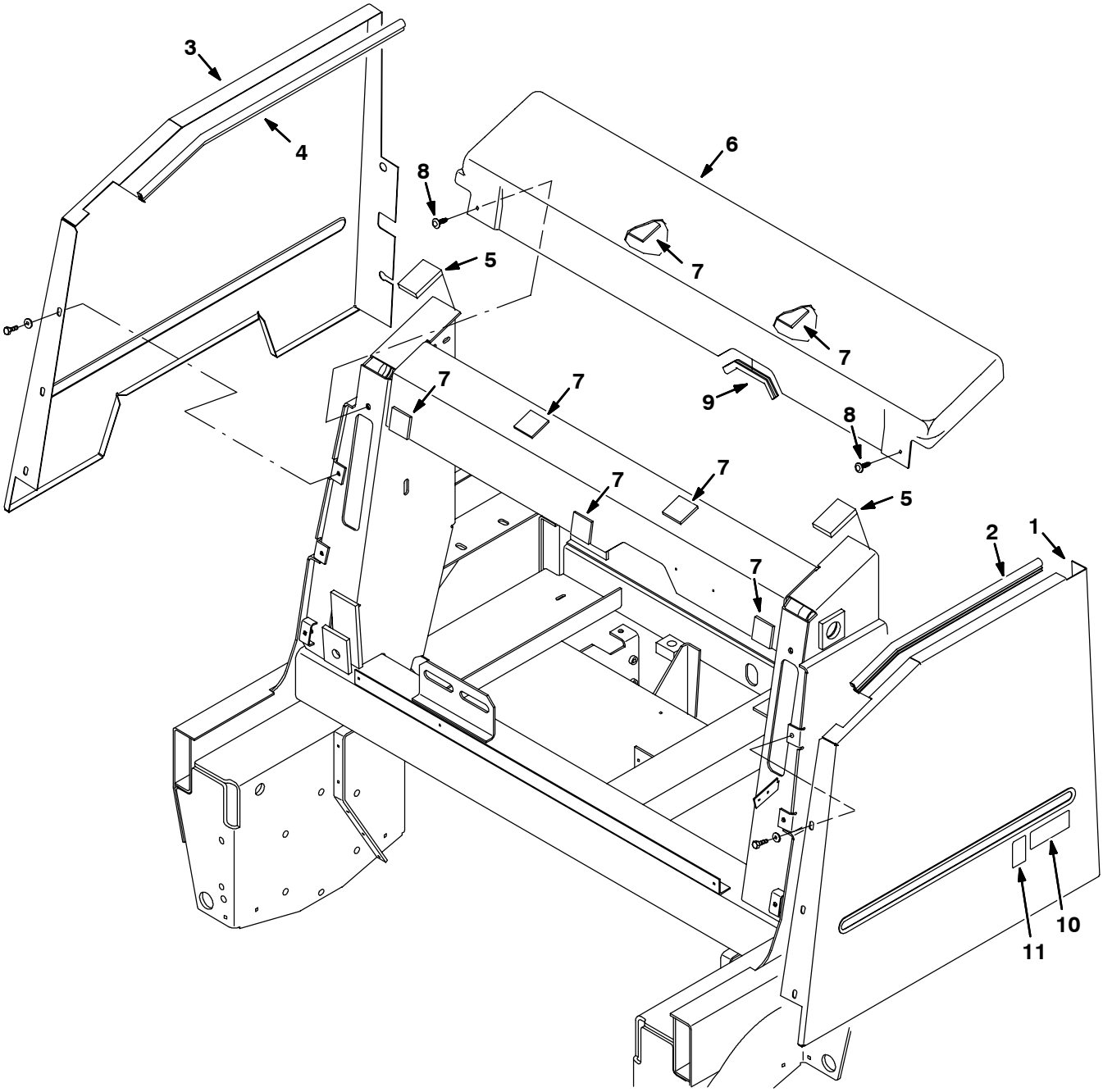

11171 - 8410, NA

Fig. 8 - Main Frame Tank Panel Group

	Ref.	Part No.	Serial Number	Description	Qty.
	1	83775	(000000-)	Panel, Lh	1
	2	84038	(000000-)	Seal, Bulb, Sd-0504 21.25 Lg	1
	3	83778	(000000-)	Panel, Rh	1
	4	84037	(000000-)	Seal, Bulb, Sd-0504 29.50 Lg	2
	5	72824	(000000-)	Insulation, Acoustic	1
▽	6	84100	(000000-)	Cover, Lintel 8410 W/Fasteners	1
▲	7	83979	(000000-)	Fastener, Velcro 2.0W 2L T400	7
	8	84086	(000000-)	Clip, Christmas Tree	2
	9	62595-16	(000000-)	Molding, Trim 11-14Ga 8.50	1
	10	1005416	(014215-)	Label, Fast	1
	11	1015012	(014215-)	Label [Nfsi Certification]	1

Fig. 9 - Hopper Lift Arms Group

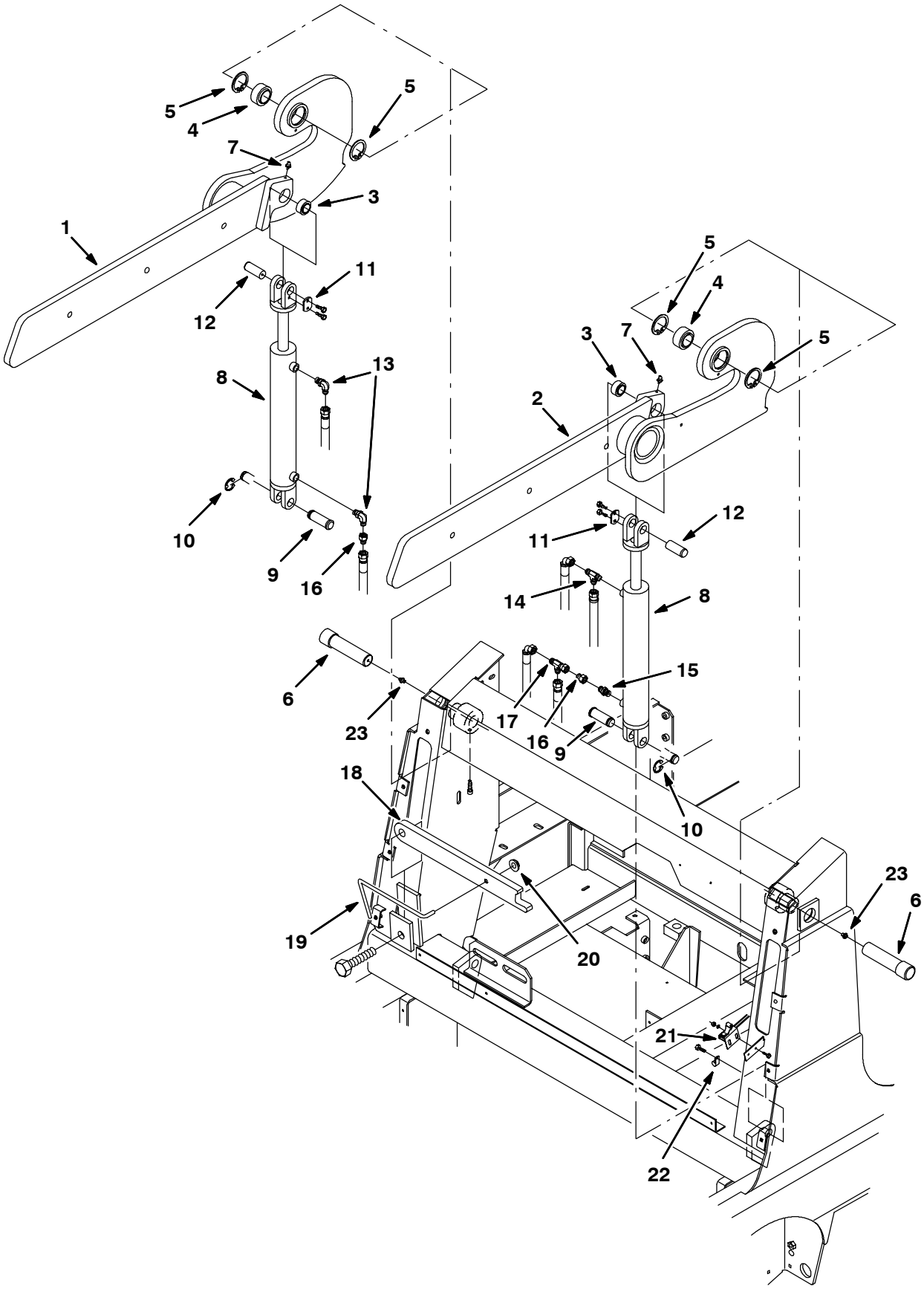

09006 - ALL

Fig. 9 - Hopper Lift Arms Group

Ref.	Part No.	Serial Number	Description	Qty.
1	78906	(000000-)	Arm Assy, Lift, Rh W/Label	1
2	78907	(000000-)	Arm Assy, Lift, Lh W/Label	1
3	73302	(000000-)	Bearing, Self Align, Sealed	2
4	72895	(000000-)	Bearing, Self Align, Sealed	2
5	59542	(000000-)	Ring, Retaining, Intl 2.00Dia	4
6	73068	(000000-)	Pin, Lift Arm	2
7	07259	(000000-)	Ftg, Grease.25-28Th Strt .47L	4
8	379120	(000000-)	Cylinder, Hyd 2.0B 12.0S 2500	2
9	73077	(000000-)	Pin, Clevis, Grooved	2
10	72899	(000000-)	Ring, Retaining, Ext, .88 Dia	2
11	72897	(000000-)	Plate, Pin, Clevis, Upper	2
12	72898	(000000-)	Pin, Clevis, Upper	2
13	77097	(000000-)	Ftg-Hyd E90 Jm04/Om04	2
14	34390	(000000-)	Ftg-Hyd Tee Jm04Jmom	1
15	55586	(000000-)	Ftg-Hyd Str Jm04/Om04	1
16	16455	(000000-)	Ftg-Hyd Rst Jm04/.047	2
17	57988	(000000-)	Ftg-Hyd Tee Jm04Jmjf	1
18	78936	(000000-)	Arm Assy, Safety W/Label	1
19	72805	(000000-)	Handle, Arm, Safety	1
20	59849	(000000-)	Nut, Retainer R/.312 Dia	1
21	59965	(000000-)	Switch, Roller	1
22	46236	(000000-)	Clamp-Cable	1
23	09718	(000000-)	Ftg, Grease.25-28Th 90 .75L	2

Fig. 10 - Hopper and Dump Door Group

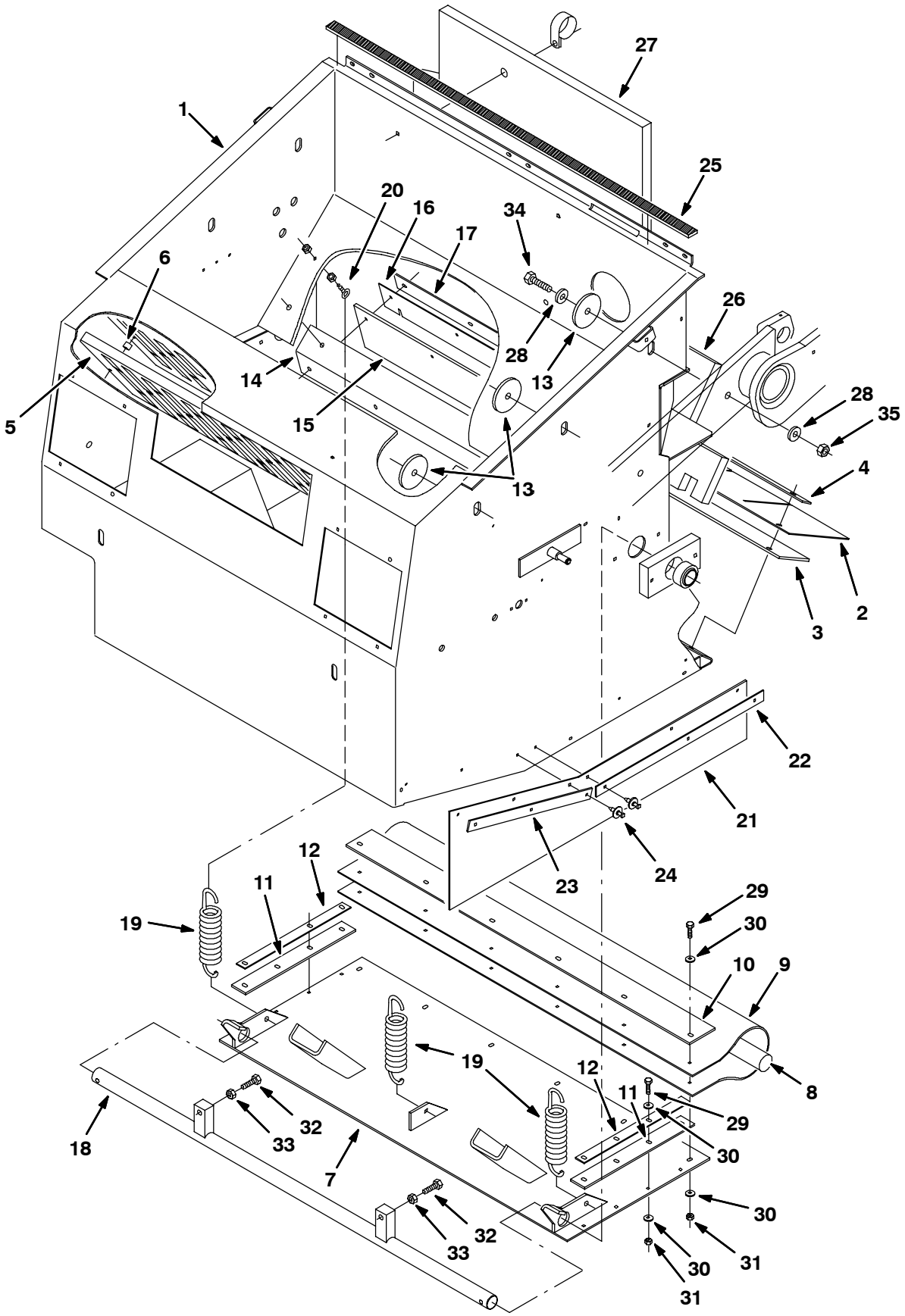

11181 - ALL

Fig. 10 - Hopper and Dump Door Group

Ref.	Part No.	Serial Number	Description	Qty.
1	21211	(000000-)	Hopper Wldt	1
2	59680	(000000-)	Skirt, Lip	1
3	59681	(000000-)	Skirt, Lip	1
4	55890	(000000-)	Strap, Main Lip	1
5	55021	(000000-)	Panel, Perma-Filter	1
6	82483	(000000-)	Tube,Spacer,.41Dx.32Bx1.Ol	2
7	374507	(000000-)	Door, Dump	1
8	55864	(000000-)	Cord, Sponge	1
9	59685	(000000-)	Seal, Door, Dump	1
10	59686	(000000-)	Strap, Door, Dump	1
11	59687	(000000-)	Seal, Door, Dump, Side	2
12	59688	(000000-)	Strap, Door, Dump, Side	2
13	72159	(000000-)	Washer, .562B 3.03D .25Hr.Znc	6
14	55879	(000000-)	Angle, Hopper	1
15	58103	(000000-)	Seal, Door, Hopper	1
16	59105	(000000-)	Seal, Door, Hopper	1
17	55884	(000000-)	Strap	1
18	55889	(000000-)	Rod Wldt, Pivot	1
19	55892	(000000-)	Spring, Tension	3
20	11893	(000000-)	Bolt-Eye, .25-20Zinc.56D 2.00L	3
21	54089	(000000-)	Skirt, Side, Sbdc,	1
22	54013	(000000-)	Plate, Retainer	1
23	54014	(000000-)	Plate, Retainer, Front	1
24	72968	(000000-)	Rivet, Plastic .250X.898	6
25	72071	(000000-)	Seal, Foam Rubber	1
26	72980	(000000-)	Insulation, Acoustic, Hopper,	1
27	72981	(000000-)	Insulation,Acoustic,Hopper,Upp	1
28	36328	(000000-)	Washer-Belleville .50 Pltd	12
29	09007	(000000-)	Screw, Hex, M6 X 1.0 X 25, Ss	14
30	32490	(000000-)	Washer, Flat, 0.25 Std	28
31	08708	(000000-)	Nut, Hex, Lock, M6 X 1.0, Nl	14
32	33612	(000000-)	Screw, Hex, M10 X 1.25 X 35, 8.8	2
33	66185	(000000-)	Nut, Hex, Std, M10 X 1.25	2
34	73377	(000000-)	Screw, Hex, M12 X 1.75 X 60, 10.9	6
35	08711	(000000-)	Nut, Hex, Lock, M12 X 1.75,Nl	6

Fig. 11 - Hopper Hood and Bumper Group

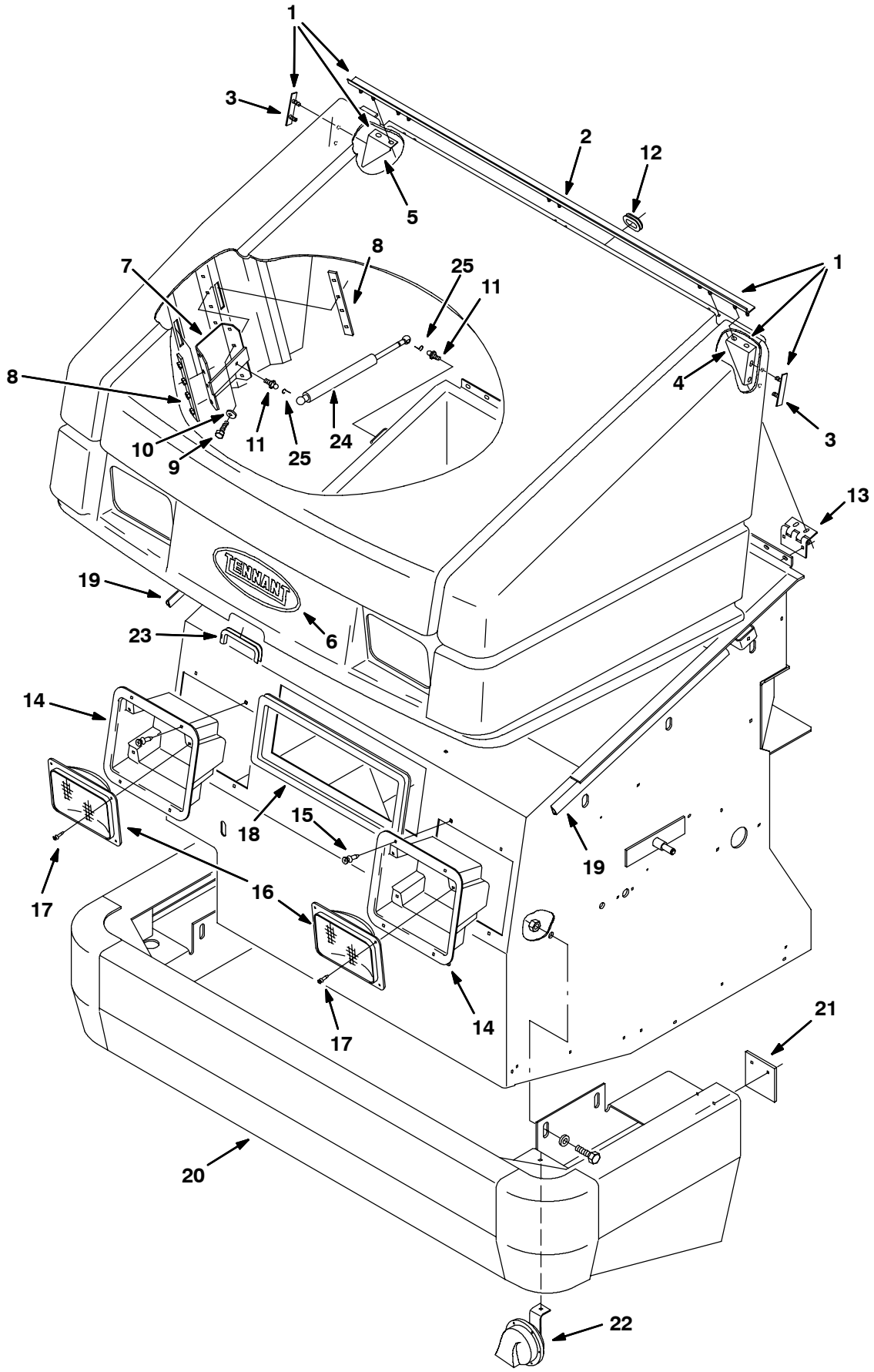

11179 - 8410, NA

Fig. 11- Hopper Hood and Bumper Group

	Ref.	Part No.	Serial Number	Description	Qty.
▽	1	10688	(000000-)	Cover Assy, Hppr	1
▲	2	59442	(000000-)	Strip, Mtg	1
▲	3	59738	(000000-)	Strip, Mtg, Gusset	2
▲	4	59737	(000000-)	Bracket, Gusset, Corner, Lh	1
▲	5	59739	(000000-)	Bracket, Gusset, Corner, Rh	1
	6	17200	(000000-)	Label, Logo, Tennant, Oval, 254l,Blu/Grn	1
▽		70182	(000000-)	Bracket Kit, Spring, Replmt	1
▲	7	70185	(000000-)	Bracket Wldt, Spring, Gas, Hppr Cover	2
▲	8	70178	(000000-)	Plate Wldt, Backing	4
▲	9	12274	(000000-)	Screw, Hex, M6 X 1.0 X 20, 8.8, Nl	2
▲	10	32490	(000000-)	Washer, Flat, 0.25 Std	4
	11	58494	(000000-)	Stud, Ball, .39d .31-16, Gasspring	4
	12	10632-1	(000000-)	Grommet, Rbr, 1.06id, F/1.4h, .19 Matl	1
	13	58500	(000000-)	Hinge, .25pin .13 2.7w 03.0l 4/H&S	3
	14	59004	(000000-)	Housing, Headlight, Hppr	2
	15	72971	(000000-)	Rivet, Plstc, .325d X 0.787	8
	16	58524	(000000-)	Headlight, 12vdc, 50watt [#70744]	2
	17	72969	(000000-)	Rivet, Plstc, .181d X 0.720	8
	18	74409	(000000-)	Seal, Lip, 90, 1.3w . Grip 050.0l	1
	19	77375	(000000-)	Duct, Vyl, 0.40 X 0.75 .25d 24.0l	2
	20	72065	(000000-)	Bumper Wldt, Front	1
	21	59448	(000000-)	Skirt, Neo, .25, 03.50w 03.50l, 02 Hole	2
	22	369704	(000000-)	Horn, 12vdc, Dba [Wolo]	1
	23	62595-6	(000000-)	Molding, Trim, Pvc, .08-.11 07.5l	1
	24	64535	(000000-)	Gasspring, 120lb, 7.1strk	2
	25	64595	(000000-)	Clip, Safety, Gasspring	4

Fig. 12 - Hopper Filter Box Group

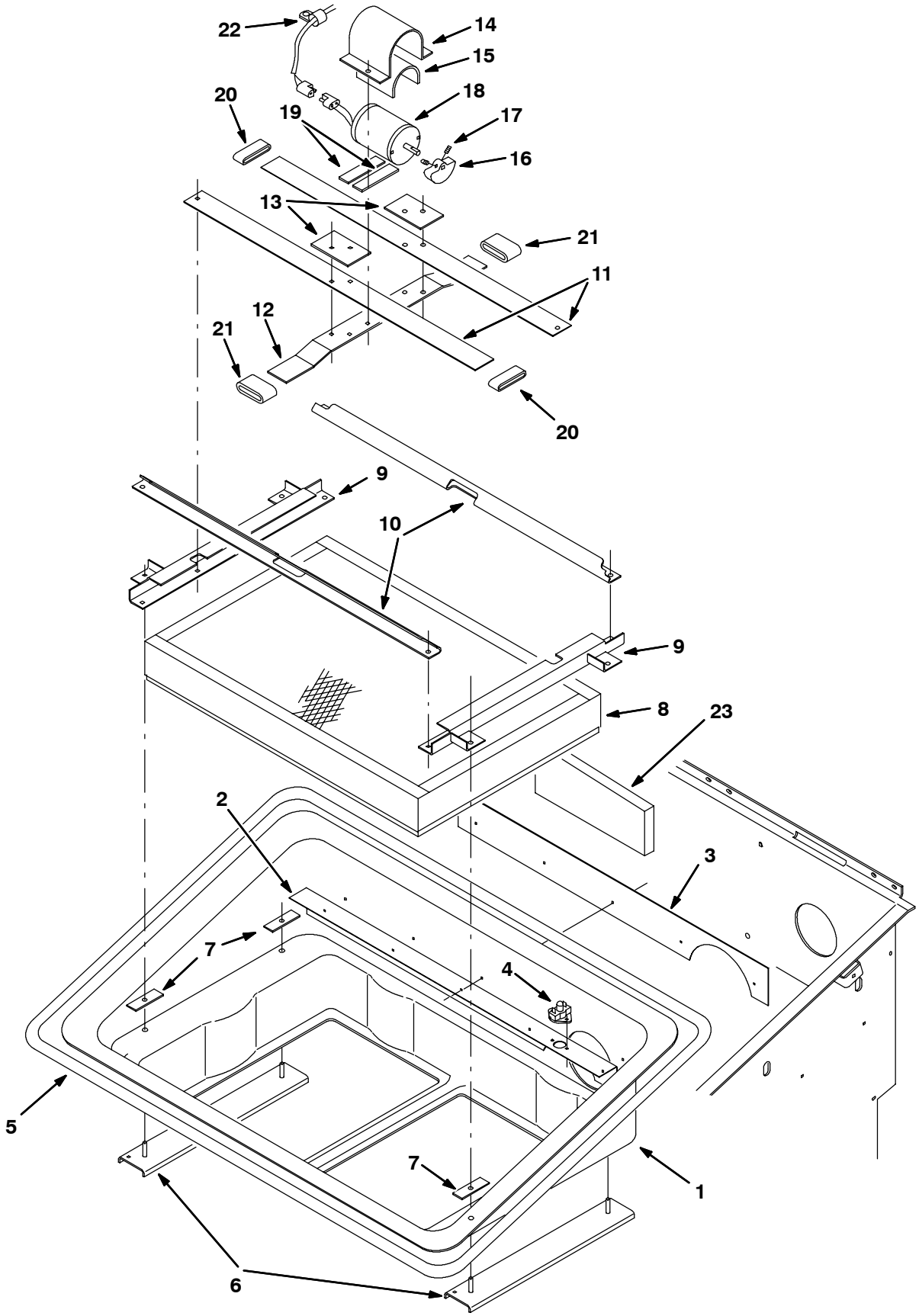

11183 - 8410, NA

Fig. 12 - Hopper Filter Box Group

Ref.	Part No.	Serial Number	Description	Qty.
1	73323	(000000-)	Tray, Filter Carrier	1
2	73322	(000000-)	Angle, Stiffener, Tray, Filter	1
3	73321	(000000-)	Plate, Stiffener, Tray, Filter	1
4	02712	(000000-)	Thermostat Assembly,140 Deg	1
5	79425	(000000-)	Seal, Bulb 140.0 Lg	1
6	73320	(000000-)	Plate, Mounting, Shaker Filter	4
7	56610	(000000-)	Plate	4
8	12962	(000000-)	Filter, PKG, Panel, 94 Pleats	1
9	59545	(000000-)	Bracket	2
10	53786	(000000-)	Bracket, Filter	2
11	58482	(000000-)	Spring,Shaker	2
12	58483	(000000-)	Bar,Shaker	1
13	82475	(000000-)	Bar,Shaker Spring	2
14	36666	(000000-)	Strap, Motor, Shaker	1
15	36658	(000000-)	Bar-Flt .06T 4.00W 5.00L,Rbr	1
16	55130	(000000-)	Weight, Eccentric	1
17	20634	(000000-)	Scr-Set 10-24X0.25 Nylon Loc	2
18	54121	(000000-)	Motor,Elec Shaker 12V	1
19	36661	(000000-)	Bar-Flt .06T 1.00W 4.00L,Rbr	2
20	36663	(000000-)	Sleeve,1.12B 1.38D1.00 Rubber	2
21	36665	(000000-)	Sleeve,1.12B 1.62D1.50 Rubber	2
22	46236	(000000-)	Clamp-Cable, 0.25D 0.56W Stl	1
23	59629	(012313-)	Insulation, Acoustic	1

Fig. 13 - Hopper Cylinder and Dust Door Group

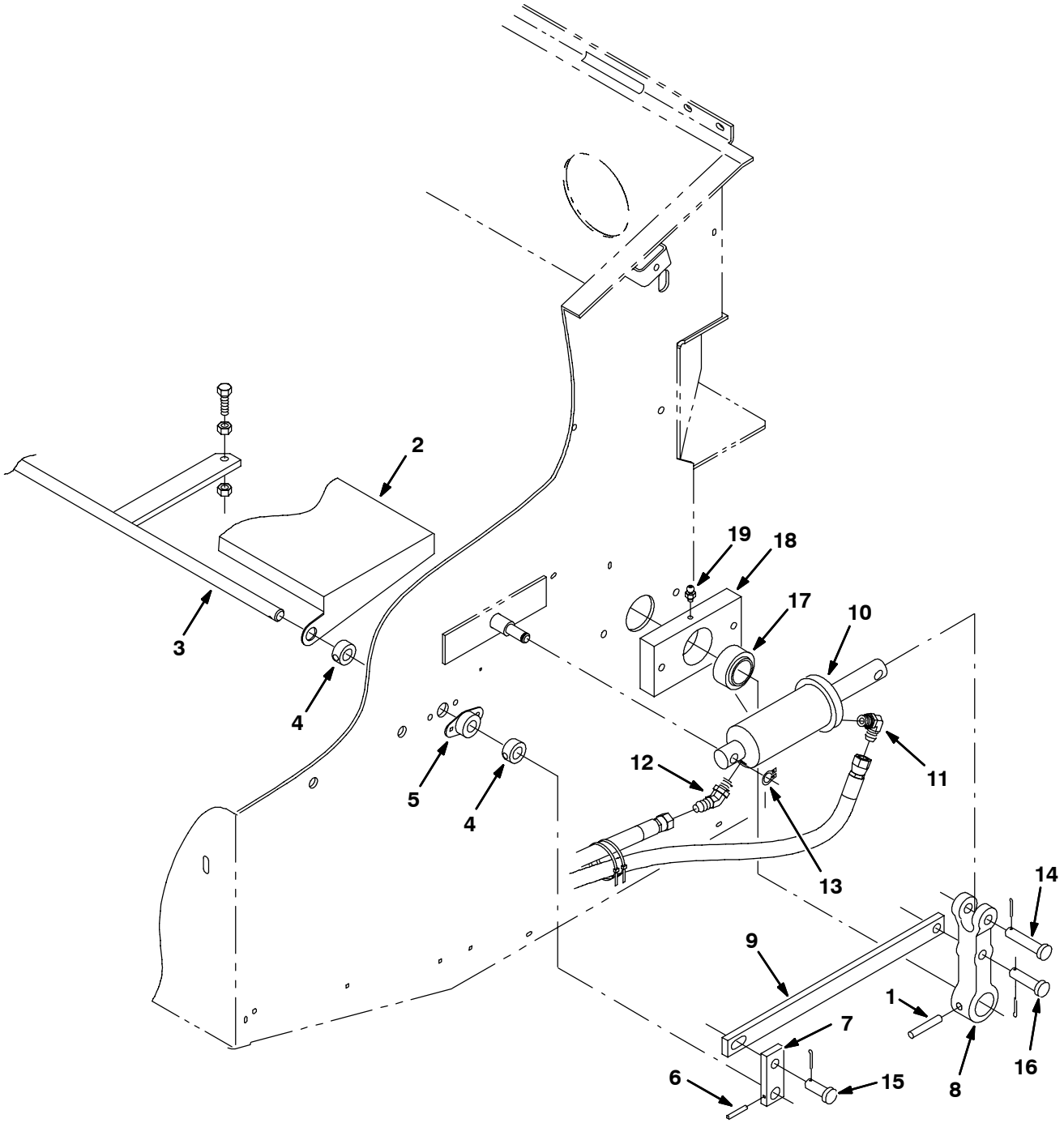

09010 - ALL

Fig. 13 - Hopper Cylinder and Dust Door Group

Ref.	Part No.	Serial Number	Description	Qty.
1	51317	(000000-)	Pin,Roll,.38Odx2.00L,.375/.382	2
2	53910	(000000-)	Door, Dust	1
3	53915	(000000-)	Rod	1
4	34725	(000000-)	Collar, Locking, Plated	4
5	34096	(000000-)	Bearing-Flange,2 Hole .625Bore	2
6	26103	(000000-)	Pin,Roll,.18Odx1.25L,.187/.192	2
7	59966	(000000-)	Bar, Link	2
8	78787	(000000-)	Yoke, Pivot, Machining	2
9	55893	(000000-)	Bar, Link	2
10	54096	(000000-)	Cylinder-Hyd2.0X4.0Da2500Psi	2
11	77097	(000000-)	Ftg-Hyd E90 Jm04/Om04	2
12	34359	(000000-)	Ftg-Hyd E45 Jm04/Om04	2
13	23524	(000000-)	Ring,Retain,Ex,0.50Od,Selflock	2
14	11211	(000000-)	Pin, Clevis .50 Dia X 2.25 Lg	2
15	58078	(000000-)	Pin,Clevis, .50 Diax 1.25 Lg	2
16	51534	(000000-)	Pin,Clevis,0.50 Dia.X 2.00 Lg	2
17	42120-1	(000000-)	Bearing-Self Align 1.250 Bore	2
18	55914	(000000-)	Hub, Pivot	2
19	47801	(000000-)	Ftg, Grease.25-28Th Strt .63L	2

Fig. 14 - Hopper Solenoid Valve Group

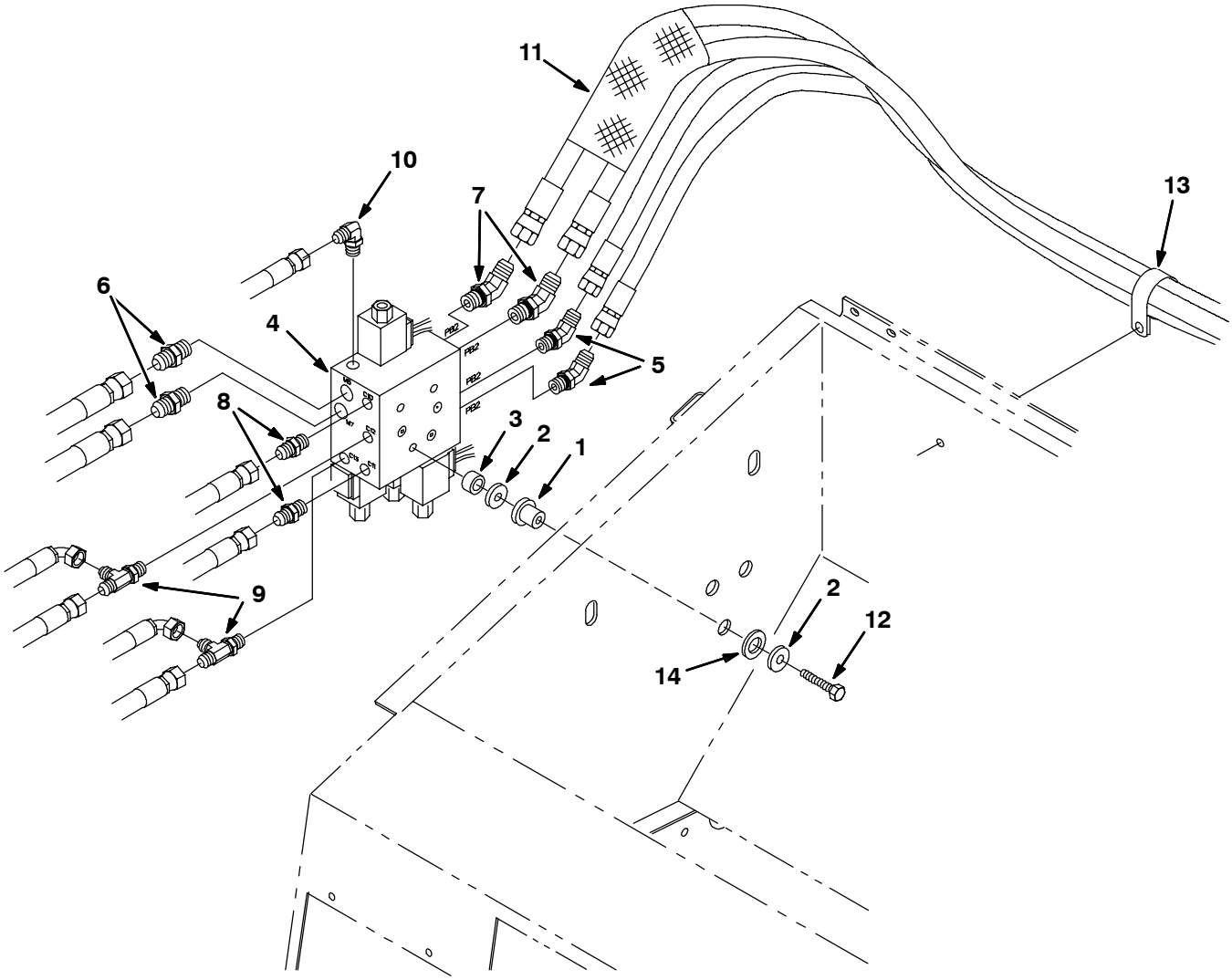

11173 - ALL

Fig. 14 - Hopper Solenoid Valve Group

Ref.	Part No.	Serial Number	Description	Qty.
1	54274	(000000-)	Isolator-Vibration, 125Lb. Ratng	3
2	13248	(000000-)	Washer .400B 1.12D .12Cr Znc	6
3	82229	(000000-)	Sleeve, .562B .88D .50 Znc	3
4	84011	(000000-)	Valve, Hyd Cntrl Sol (See Breakdowns)	1
5	34359	(000000-)	Ftg-Hyd E45 Jm04/om04	2
6	44869	(000000-)	Ftg-Hyd Str Jm08/om08	2
7	42226	(000000-)	Ftg-Hyd E45 Jm08/om08	2
8	55586	(000000-)	Ftg-Hyd Str Jm04/om04	2
9	34390	(000000-)	Ftg-Hyd Tee Jm04Jmom	2
10	77097	(000000-)	Ftg-Hyd E90 Jm04/om04	1
11	50121	(000000-)	Sleeve, Nyln	1
12	73399	(000000-)	Scr-Hex M8X1.5 50	3
13	86328	(000000-)	Clamp-Cable 1.50D 1.00W STL	1
14	39350	(000000-)	Washer Flt .75 SAE	3

Fig. 15 - Vacuum Fan Group, Sweeper

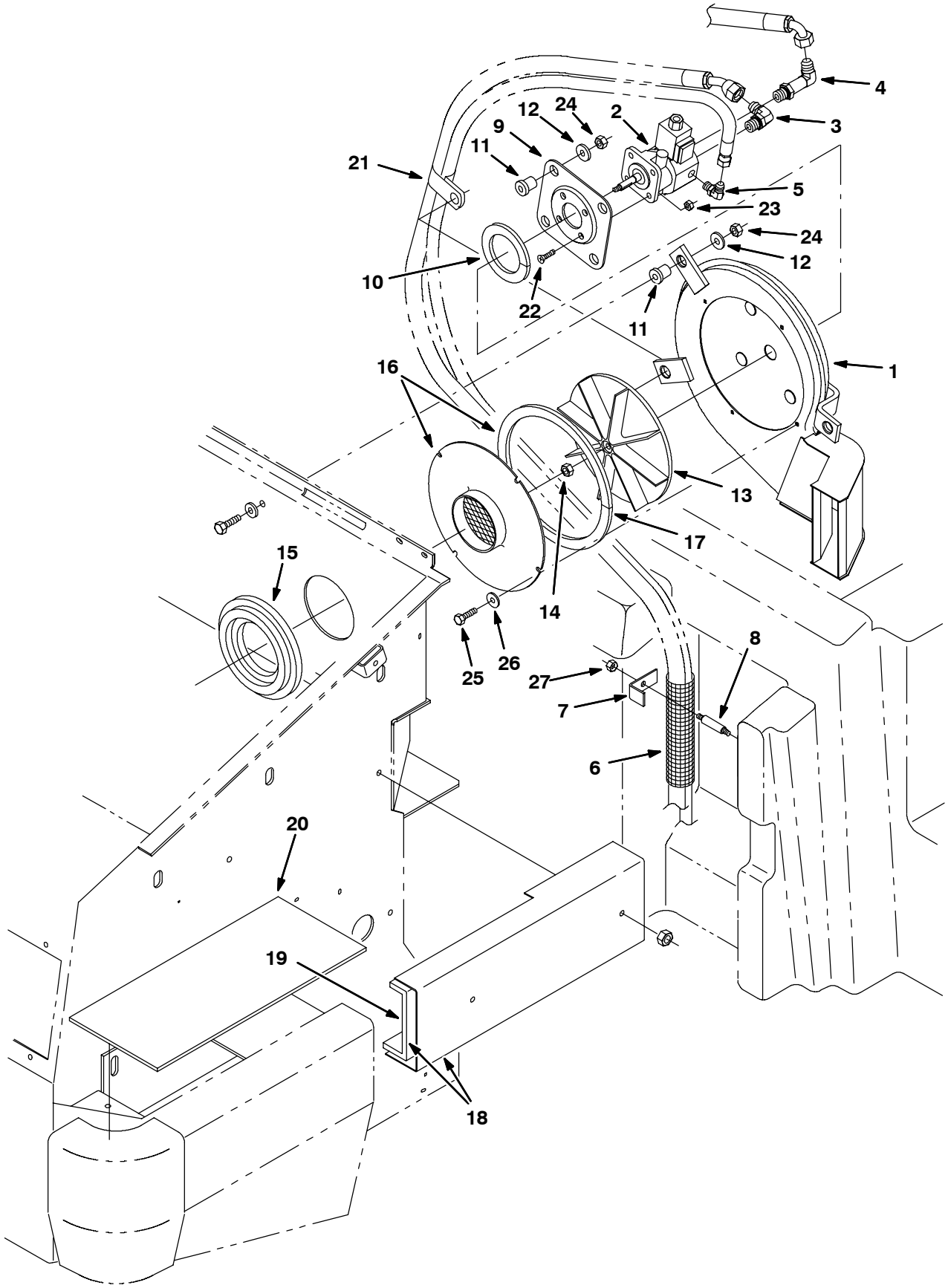

09016 - ALL

Fig. 15 - Vacuum Fan Group, Sweeper

	Ref.	Part No.	Serial Number	Description	Qty.
	1	21207	(000000-)	Housing Wldt, Vacfan, 9.0d Impeller	1
	2	84009	(000000-)	Motor, Hyd, Gear, Ext 0.19 Lh 1800	1
	3	44868	(000000-)	Fitting, Hyd, E90, Jm08/Om08	1
	4	69173	(000000-)	Fitting, Hyd, E90, Jm08/Om08, L	1
	5	77097	(000000-)	Fitting, Hyd, E90, Jm04/Om04	1
	6	50121	(000000-)	Sleeve, Nyl, #27 08.0l	2
	7	78887	(000000-)	Clamp, Angle, Hose	1
	8	78886	(000000-)	Rod, Thrd, 2 End, M08 X 1.3 02.7l	1
	9	54275A	(000000-)	Bracket, Mtg, Motor	1
	10	59967	(000000-)	Seal, Ure, 0.38, 0.75w 13.2l Adh	1
	11	54274	(000000-)	Isolator, Vib, Bshg, 1.1d 0.6l .4b 0.78h	7
	12	13248	(000000-)	Washer, Flat, 0.40b 1.12d .12, Stl, Pl	7
	13	08143	(000000-)	Impeller, 9.00d X 0.376b	1
	14	87299	(000000-)	Nut, Hex, Flexlock, .31-24, Thin	1
	15	73397	(000000-)	Seal, Inlet, Vacfan	1
▽	16	59656	(000000-)	Duct Assy, Vacfan, W/ Seal	1
▲	17	59735	(000000-)	Seal, Ure, 0.38, 0.75w 33.0l Adh	1
▽	18	84042	(000000-)	Duct Assy, Vacfan, W/ Seal	1
▲	19	10695	(000000-)	Insulation, Acstc, 0.5, 19.5 X 11.5 Ntch	1
	20	10693	(000000-)	Insulation, Acstc, 0.3, 13.0 X 6.5	1
	21	53466	(000000-)	Clamp, Cable, Stl, 1.50d X 1.00w, 1h	1
	22	39534	(000000-)	Screw, Flt, .25-20 X 1.00, Al	4
	23	32981	(000000-)	Nut, Hex, Lock, .25-20, Nl	4
	24	41430	(000000-)	Nut, Hex, Lock, M10 X 1.5, Nl	7
	25	34323	(000000-)	Screw, Hex, .25-20 X 0.75, Nl	4
	26	41178	(000000-)	Washer, Flat, 0.25 Fendr	4
	27	08713	(000000-)	Nut, Hex, Lock, M8 X 1.25, Nl, Ss	1

Fig. 16 - Hopper Pressure Switch Group

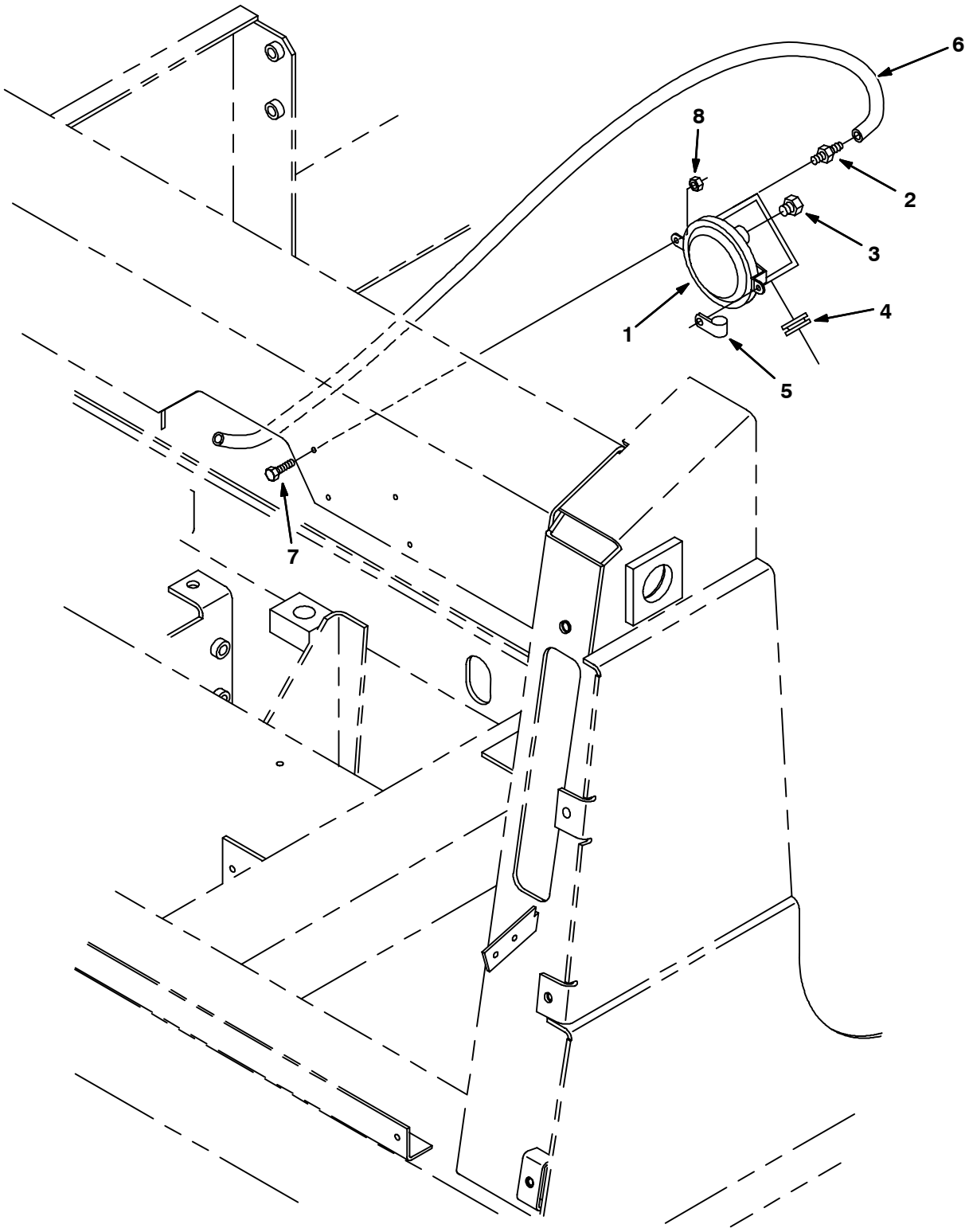

09112 - ALL

Fig. 16 - Hopper Pressure Switch Group

Ref.	Part No.	Serial Number	Description	Qty.
1	34868	(000000-)	Switch, Pressure	1
2	40607	(000000-)	Ftg, Brass,St Bm03/Pm02	1
3	82739	(000000-)	Ftg, Breather	1
4	10632-4	(000000-)	Grommet, Rbr,0.62Id,For .06Matl	1
5	46236	(000000-)	Clamp-Cable, 0.25Dia 0.56Wth	1
6	39780-1	(000000-)	Hose, Vacuum,.16Id X 28.0Lg	1
7	09228	(000000-)	Screw, Hex, M4 X 0.7 X 20, 8.8	2
8	02850	(000000-)	Nut, Hex, Lock, M4 X 0.7, Nl	2

Fig. 17 - Engine and Alternator Group (000000-013227)

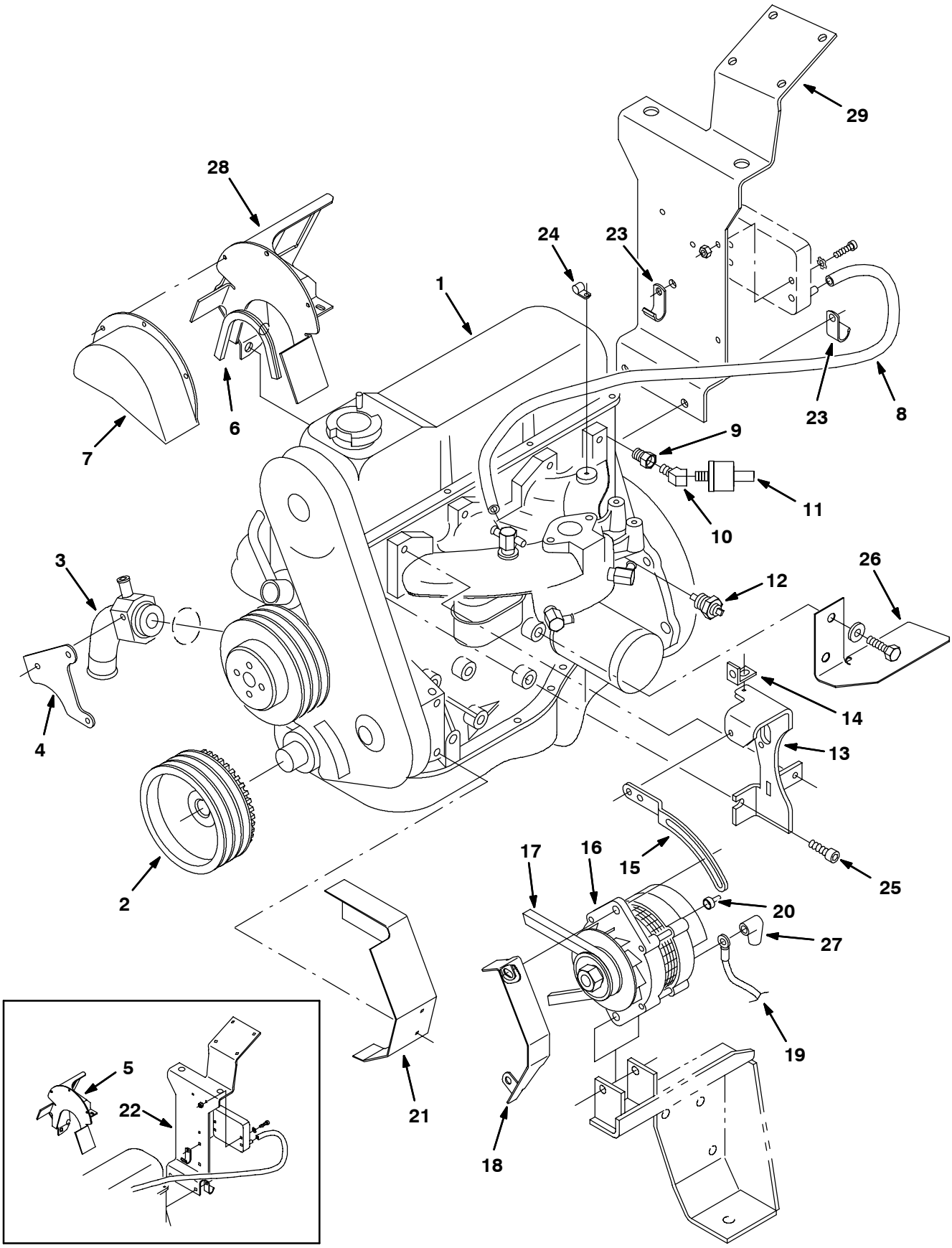

11001 - 8410, G, LP

Fig. 17 - Engine and Alternator Group (000000-013227)

	Ref.	Part No.	Serial Number	Description	Qty.
▽	1	83649	(000000–012574)	Kit, Engine (See 2.3L Engine Breakdown)	1
▲		60938	(000000–013227)	Starter, 12vdc, Ford 2.3 Fd	1
▽	1	385411	(012575–013227)	Engine Purch Kit, Lrg425 (See 2.5L Engine Breakdown)	1
▲		60938	(000000–013227)	Starter, 12vdc, Ford 2.3 Fd	1
	2	83664	(000000–013227)	Sheave, Eng Crank, Fd W/Tg	1
	3	83729	(000000–013227)	Adaptor, Water Pump Machined	1
	4	83731	(000000–013227)	Plate, Mtg	1
	5	83768	(000000–012494)	Bracket	1
	6	59375	(000000–013227)	Extrusion,.062 Matl10.10Lg	1
	7	21294	(000000–013227)	Cover	1
	8	19774	(000000–013227)	Hose, Vacuum	1
	9	17414	(000000–013227)	Fitting, Hyd, Str	1
	10	32376	(000000–013227)	Fitting, Hyd, Elbow	1
	11	79399	(000000–013227)	Switch, Pressure Oil	1
	12	36165	(000000–013227)	Send Unit, Temperature	1
	13	83750	(000000–013227)	Bracket, Alternator Mounting	1
	14	63310	(000000–013227)	Bracket	1
	15	31526	(000000–013227)	Arm	1
▽	16	60559	(000000–013227)	Alternator	1
▲		61931	(000000–013227)	Regulator	1
▲		86041	(000000–013227)	Bearing, Ball	1
▲		61529	(000000–013227)	Kit, Brush	1
▲		61531	(000000–013227)	Rectifier	1
▲		70160	(000000–013227)	Pulley	1
	17	83692	(000000–013227)	Belt, V	1
	18	83581	(000000–013227)	Guard, Alternator F/60559	1
	19	82731	(000000–013227)	Wire, Ground	1
	20	61363	(000000–013227)	Boot	2
	21	83853	(000000–013227)	Cover, Oil Pump	1
	22	385434	(000000–012503)	Kit, Replmt Brackets F/83986	1
	23	30407	(000000–013227)	Clip	3
	24	40678	(000000–013227)	Clamp, Cable	1
	25	39309	(000000–013227)	Screw, Soc, M10–1.5 X 25, Al	1
	26	83572	(000000–013227)	Bracket	1
	27	34065	(000000–013227)	Boot	3
	28	385417	(012495–013227)	Bracket	1
	29	385431	(012504–013227)	Bracket Wldt, Air Filter 2.5	1

Fig. 18 - Engine Mount Group (000000-013227)

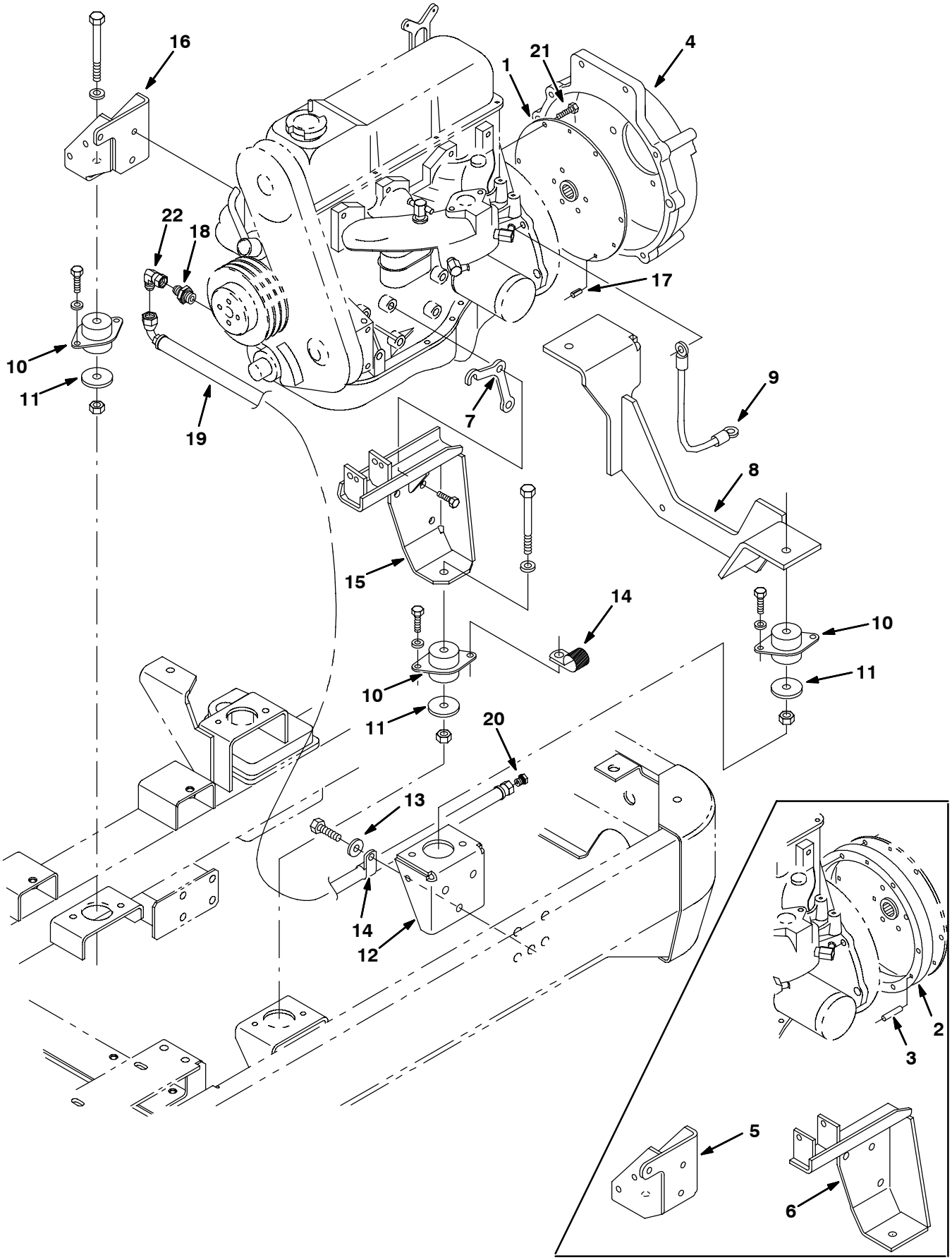

11003 - 8410, G, LP

Fig. 18 - Engine Mount Group (000000-013227)

Ref.	Part No.	Serial Number	Description	Qty.
1	35980	(000000–013227)	Coupling, Flywheel	1
2	72699	(000000–012574)	Spacer	1
3	23574	(000000–012574)	Pin	3
4	83689	(000000–012574)	Housing, Flywheel	1
4	385433	(012575–013227)	Housing, Flywheel, Mach, Lr	1
5	83662	(000000–012494)	Bracket	1
6	83670	(000000–012462)	Bracket Wldt, Eng/Alt Mount	1
7	83673	(000000–013227)	Plate, Spacer, Mtg, Eng 2.3Fd	1
8	73289	(000000–013227)	Bracket	1
9	73446	(000000–013227)	Wire Assy	1
10	63695	(000000–013227)	Isolator, Mtg	4
11	51564	(000000–013227)	Washer	4
12	73072	(000000–013227)	Bracket	2
13	41187	(000000–013227)	Washer, Belleville, .38	6
14	58366	(000000–013227)	Clamp, Cable	2
15	374589	(012463–013227)	Bracket, Eng/Alt Mount	1
16	385426	(012495–013227)	Bracket, Mtg, Engine Front Rh	1
17	14296	(012575–013227)	Pin, Roll	3
18	375323	(000000–013227)	Fitting, Hyd, Str, Metric	1
19	375205	(000000–013227)	Hose, Hyd, Low06, 24.0	1
20	19747	(000000–013227)	Fitting, Hyd, Plug	1
21	375193	(000000–013227)	Screw, Hex, M08 X 1.00 X 16, 10.9	6
22	47504	(000000–013227)	Fitting, Hyd, E90 Jf06/Jm06	1

Fig. 19 - Engine Group (013228-013999)

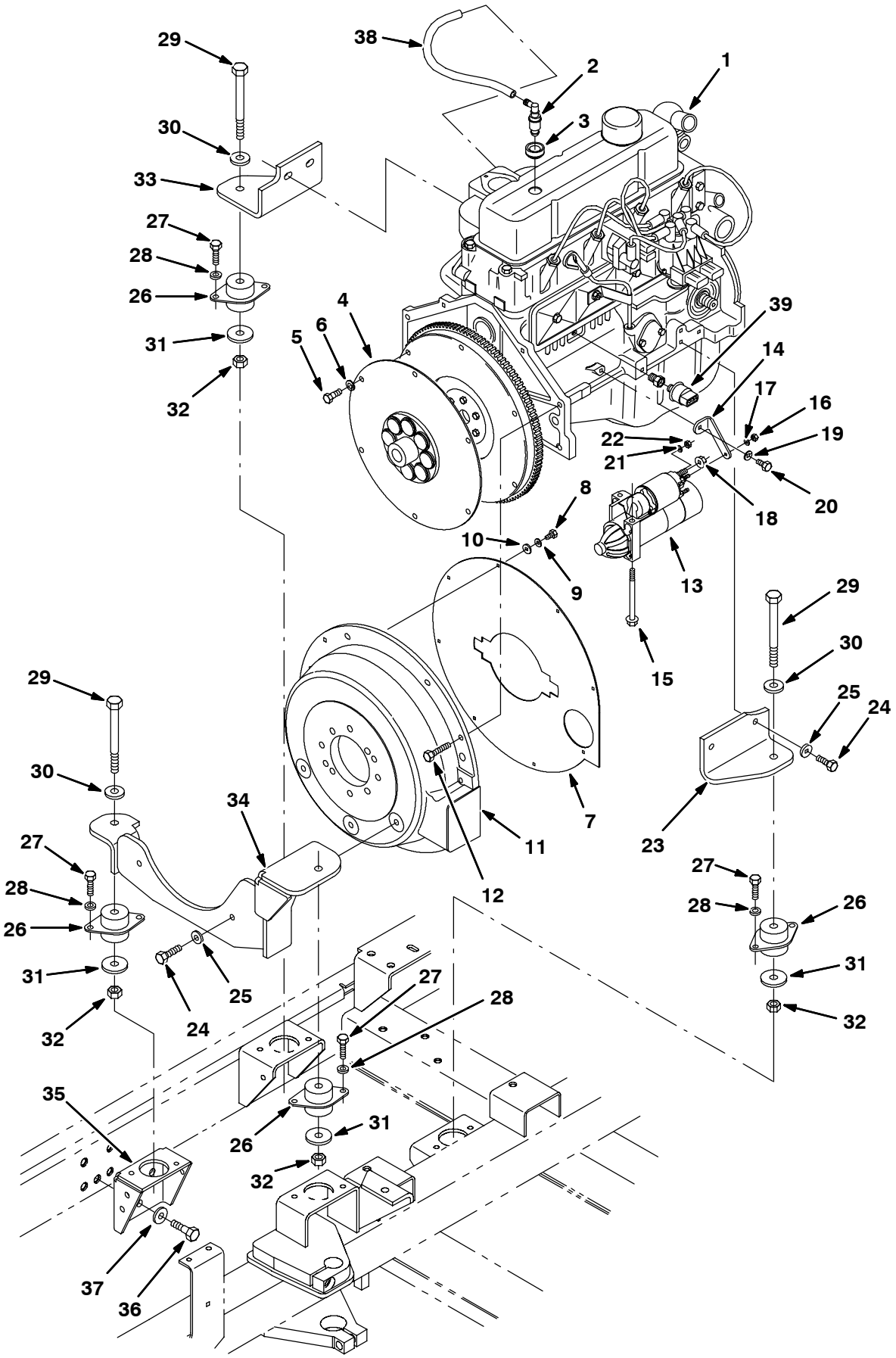

353842 - 8410, G, LP

Fig. 19 - Engine Group (013228-013999)

Ref.	Part No.	Serial Number	Description	Qty.
1	392561	(013228-013999)	Engine, Gm, Gas, Open Loop, (See GM Engine Breakdown)	1
1	392563	(013228-013999)	Engine, Gm, Lpg, Open Loop, (See GM Engine Breakdown)	1
2	393975	(013228-013999)	Valve, [Pcv]	1
3	393984	(013228-013999)	Grommet	1
4	371507	(013228-013999)	Plate, Drive	1
5	371508	(013228-013999)	Bolt, Clutch	6
6	371509	(013228-013999)	Washer, Lock, .38	11
7	371761	(013228-013999)	Shield, Dust	1
8	19315	(013228-013999)	Screw, Hex, .25-20 X 0.50, 5	8
9	371512	(013228-013999)	Washer, Lock, .25	8
10	32483	(013228-013999)	Washer, Flat, .25 Sae	8
11	371762	(013228-013999)	Housing	1
12	55347	(013228-013999)	Screw, Hex, .38-16 X 2.00, Fl	1
13	371516	(013228-013999)	Starter	1
14	371517	(013228-013999)	Bracket, Starter	1
15	371518	(013228-013999)	Bolt, Starter	1
16	50335	(013228-013999)	Nut, Hex, Std, M05 X 0.8	2
17	371519	(013228-013999)	Washer, Loc, M5	1
18	07791	(013228-013999)	Nut, Hex, Flng, M08 X 1.25	1
19	393994	(013228-013999)	Washer, Lock, .31	1
20	54396	(013228-013999)	Screw, Hex, .31-18 X 0.75, 5	1
21	371520	(013228-013999)	Washer, Lock, #10	1
22	19311	(013228-013999)	Nut, Hex, Std, #10-24	1
23	392574	(013228-013999)	Bracket, Mtg, Eng, Front, Rh	1
24	21197	(013228-013999)	Screw, Hex, .38-16 X 1.00, 5	4
25	32492	(013228-013999)	Washer, Flat, .38 Std	4
26	63695	(013228-013999)	Isolator, Vib, Flng, 1.3l .5b 2/.39h	4
27	39277	(013228-013999)	Screw, Hex, M08 X 1.25 X 25, 8.8	8
28	32491	(013228-013999)	Washer, Flat, .31 Std	8
29	06972	(013228-013999)	Screw, Hex, M12 X 1.75 X 60, 8.8	4
30	32493	(013228-013999)	Washer, Flat, .50 Std	4
31	04414	(013228-013999)	Washer, 0.53b 1.88d .12, Stl, Pl	4
32	08711	(013228-013999)	Nut, Hex, Lock, M12 X 1.75,Nl	4
33	392575	(013228-013999)	Bracket, Mtg, Eng, Lh	1
34	392565	(013228-013999)	Bracket Wldt, Mtg, Eng, Rear	1
35	392576	(013228-013999)	Bracket, Mtg, Eng, Rear, Lh	1
36	06968	(013228-013999)	Screw, Hex, M12 X 1.75 X 35, 8.8	3
37	41187	(013228-013999)	Washer, Belleville, .38	3
38	393973	(013228-013999)	Hose, [Pcv]	1
39	371572	(013228-013999)	Sending Unit, Oil Pressure	1

Fig. 20 - Engine Group (014000-014999)

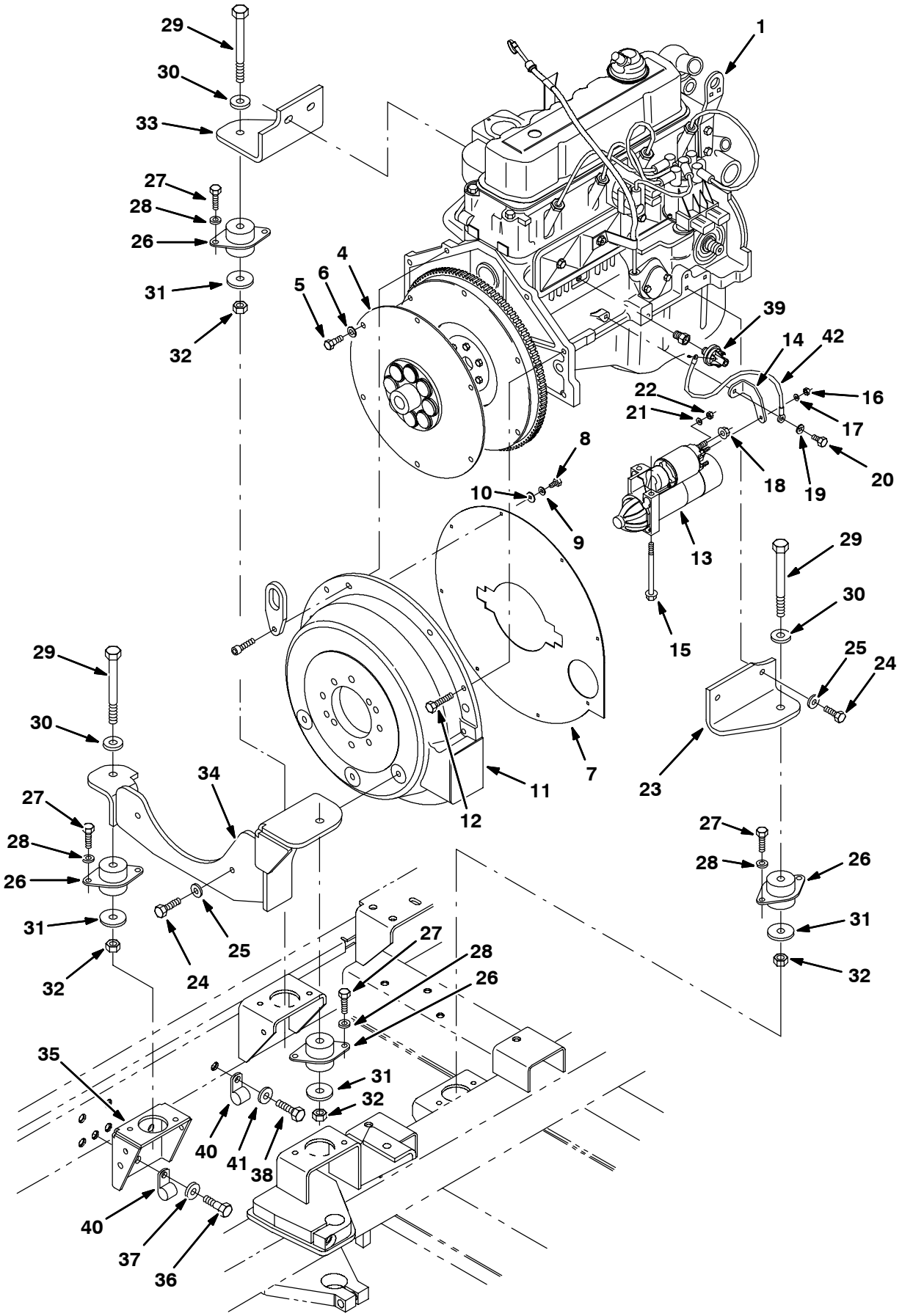

353842 - 8410, G, LP

Fig. 20 - Engine Group (014000-014999)

Ref.	Part No.	Serial Number	Description	Qty.
1	1012719	(014000-014999)	Engine Assy, Gas, Clsd Loop [Gm, 3.0l] (See GM Engine Breakdown)	1
1	1012720	(014000-014999)	Engine Assy, Lpg, Clsd Loop [Gm, 3.0l] (See GM Engine Breakdown)	1
2	372457	(014000-014999)	Bolt, Eye, Lift	1
3	372479	(014000-014999)	Screw, Soc, .38-16 X 2.25, G5	1
4	372456	(014000-014999)	Plate, Drive	1
5	371508	(014000-014999)	Bolt, Clutch	6
6	371509	(014000-014999)	Washer, Lock, .38	11
7	371761	(014000-014999)	Shield, Dust	1
8	19315	(014000-014999)	Screw, Hex, .25-20 X 0.50, 5	8
9	371512	(014000-014999)	Washer, Lock, .25	8
10	32483	(014000-014999)	Washer, Flat, .25 Sae	8
11	372458	(014000-014999)	Housing, Flywheel [3.0l]	1
12	55347	(014000-014999)	Screw, Hex, .38-16 X 2.00, Fl	1
13	371516	(014000-014999)	Starter	1
14	372473	(014000-014999)	Bracket, Starter	1
15	371518	(014000-014999)	Bolt, Starter	1
16	50335	(014000-014999)	Nut, Hex, Std, M05 X 0.8	2
17	371519	(014000-014999)	Washer, Loc, M5	1
18	07791	(014000-014999)	Nut, Hex, Flng, M08 X 1.25	1
19	393994	(014000-014999)	Washer, Lock, .31	1
20	54396	(014000-014999)	Screw, Hex, .31-18 X 0.75, 5	1
21	371520	(014000-014999)	Washer, Lock, #10	1
22	19311	(014000-014999)	Nut, Hex, Std, #10-24	1
23	392574	(014000-014999)	Bracket, Mtg, Eng, Front, Rh	1
24	21197	(014000-014999)	Screw, Hex, .38-16 X 1.00, 5	4
25	32492	(014000-014999)	Washer, Flat, .38 Std	4
26	63695	(014000-014999)	Isolator, Vib, Flng, 1.3l .5b 2/.39h	4
27	39277	(014000-014999)	Screw, Hex, M08 X 1.25 X 25, 8.8	8
28	32491	(014000-014999)	Washer, Flat, .31 Std	8
29	06972	(014000-014999)	Screw, Hex, M12 X 1.75 X 60, 8.8	4
30	32493	(014000-014999)	Washer, Flat, .50 Std	4
31	04414	(014000-014999)	Washer, 0.53b 1.88d .12, Stl, Pl	4
32	08711	(014000-014999)	Nut, Hex, Lock, M12 X 1.75,Nl	4
33	392575	(014000-014999)	Bracket, Mtg, Eng, Lh	1
34	392565	(014000-014999)	Bracket Wldt, Mtg, Eng, Rear	1
35	392576	(014000-014999)	Bracket, Mtg, Eng, Rear, Lh	1
36	06968	(014000-014999)	Screw, Hex, M12 X 1.75 X 35, 8.8	3
37	41187	(014000-014999)	Washer, Belleville, .38	3
38	16931	(014000-014999)	Screw, Hex, M8 X 1.25 X 20, 8.8	1
39	372445	(014000-014999)	Switch, Pressure, 7psi, Spdt	1
40	58366	(014000-014999)	Clamp, Cable, Stl, 1.25d X 1.00w, 1h	2
41	32491	(014000-014999)	Washer, Flat, 0.31 Std	1
42	372474	(014000-014999)	Harness, Switch, Oil Press, Ground Wire	1

Fig. 21 - Engine Group (015000-)

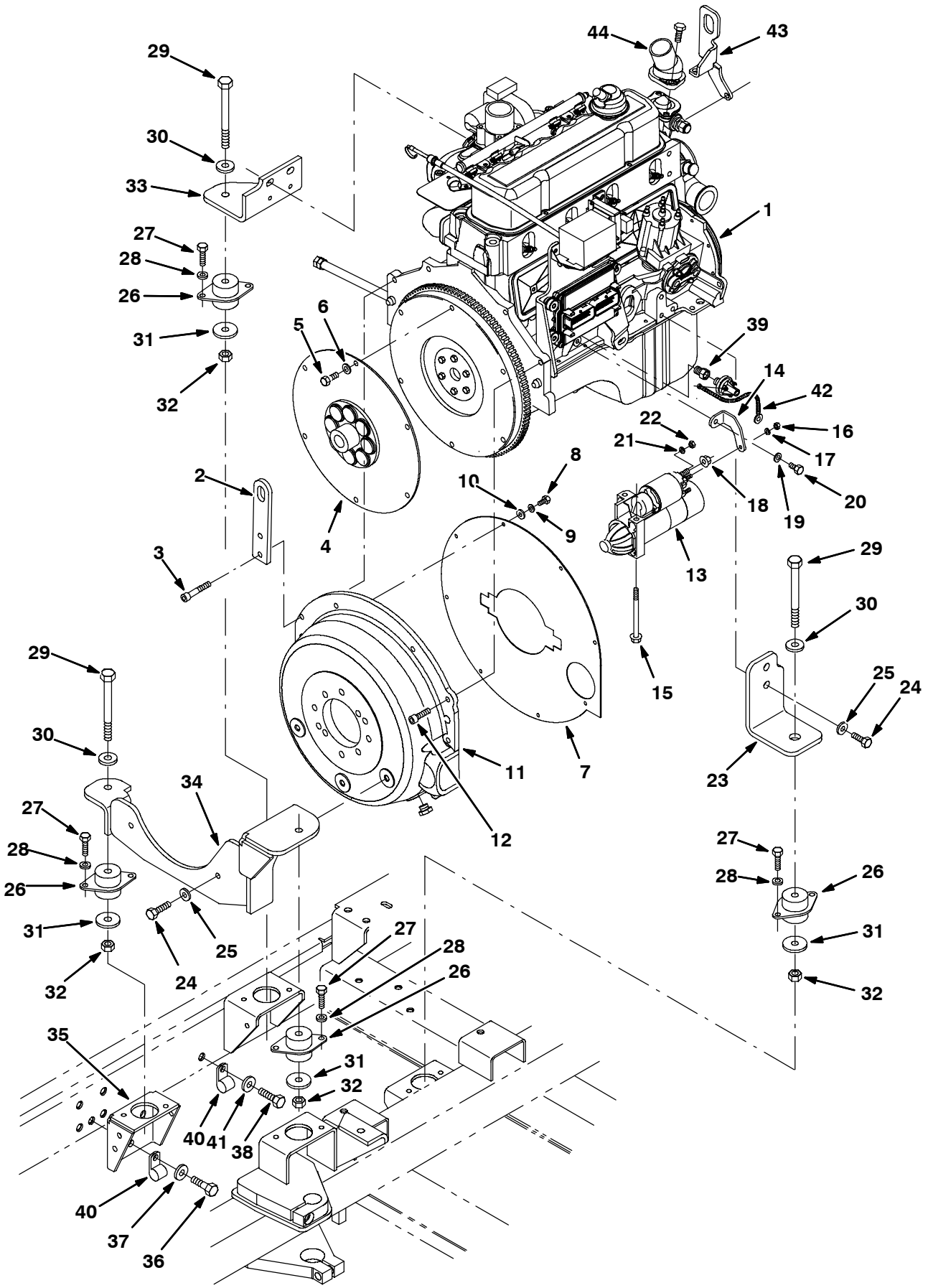

353842 - 8410, G, LP

Fig. 21 - Engine Group (015000-)

Ref.	Part No.	Serial Number	Description	Qty.
1	385019	(015000-)	Engine, Block, Long [Gm3.0l] (See GM Engine Breakdown)	1
2	1034105	(015000-)	Hook, Lift [Gm3.0l 2007]	1
3	372479	(015000-)	Screw, Soc, .38-16 X 2.25, G5	1
4	372456	(015000-)	Plate, Drive	1
5	371508	(015000-)	Bolt, Clutch	6
6	371509	(015000-)	Washer, Lock, .38	11
7	371761	(015000-)	Shield, Dust	1
8	19315	(015000-)	Screw, Hex, .25-20 X 0.50, 5	8
9	371512	(015000-)	Washer, Lock, .25	8
10	32483	(015000-)	Washer, Flat, .25 Sae	8
11	372458	(015000-)	Housing, Flywheel [3.0l]	1
12	55347	(015000-)	Screw, Hex, .38-16 X 2.00, Fl	1
13	371516	(015000-)	Starter	1
14	372473	(015000-)	Bracket, Starter	1
15	371518	(015000-)	Bolt, Starter	1
16	50335	(015000-)	Nut, Hex, Std, M05 X 0.8	2
17	371519	(015000-)	Washer, Loc, M5	1
18	07791	(015000-)	Nut, Hex, Flng, M08 X 1.25	1
19	393994	(015000-)	Washer, Lock, .31	1
20	54396	(015000-)	Screw, Hex, .31-18 X 0.75, 5	1
21	371520	(015000-)	Washer, Lock, #10	1
22	19311	(015000-)	Nut, Hex, Std, #10-24	1
23	1030220	(015000-)	Bracket, Mtg, Eng, Rh [8410]	1
24	21197	(015000-)	Screw, Hex, .38-16 X 1.00, 5	4
25	32492	(015000-)	Washer, Flat, .38 Std	4
26	63695	(015000-)	Isolator, Vib, Flng, 1.3l .5b 2/.39h	4
27	39277	(015000-)	Screw, Hex, M08 X 1.25 X 25, 8.8	8
28	32491	(015000-)	Washer, Flat, .31 Std	8
29	06972	(015000-)	Screw, Hex, M12 X 1.75 X 60, 8.8	4
30	32493	(015000-)	Washer, Flat, .50 Std	4
31	04414	(015000-)	Washer, 0.53b 1.88d .12, Stl, Pl	4
32	08711	(015000-)	Nut, Hex, Lock, M12 X 1.75,Nl	4
33	392575	(015000-)	Bracket, Mtg, Eng, Lh	1
34	392565	(015000-)	Bracket Wldt, Mtg, Eng, Rear	1
35	392576	(015000-)	Bracket, Mtg, Eng, Rear, Lh	1
36	06968	(015000-)	Screw, Hex, M12 X 1.75 X 35, 8.8	3
37	41187	(015000-)	Washer, Belleville, .38	3
38	16931	(015000-)	Screw, Hex, M8 X 1.25 X 20, 8.8	1
39	372445	(015000-)	Switch, Pressure, 7psi, Spdt	1
40	58366	(015000-)	Clamp, Cable, Stl, 1.25d X 1.00w, 1h	2
41	32491	(015000-)	Washer, Flat, 0.31 Std	1
42	372474	(015000-)	Harness, Switch, Oil Press, Ground Wire	1
43	1029334	(015000-)	Hook, Lift [Gm3.0l 2007]	1
44	1030272	(015000-)	Housing, Thermostat [Gm3.0l 2007]	1

Fig. 22 - Engine Alternator Group (013228-013999)

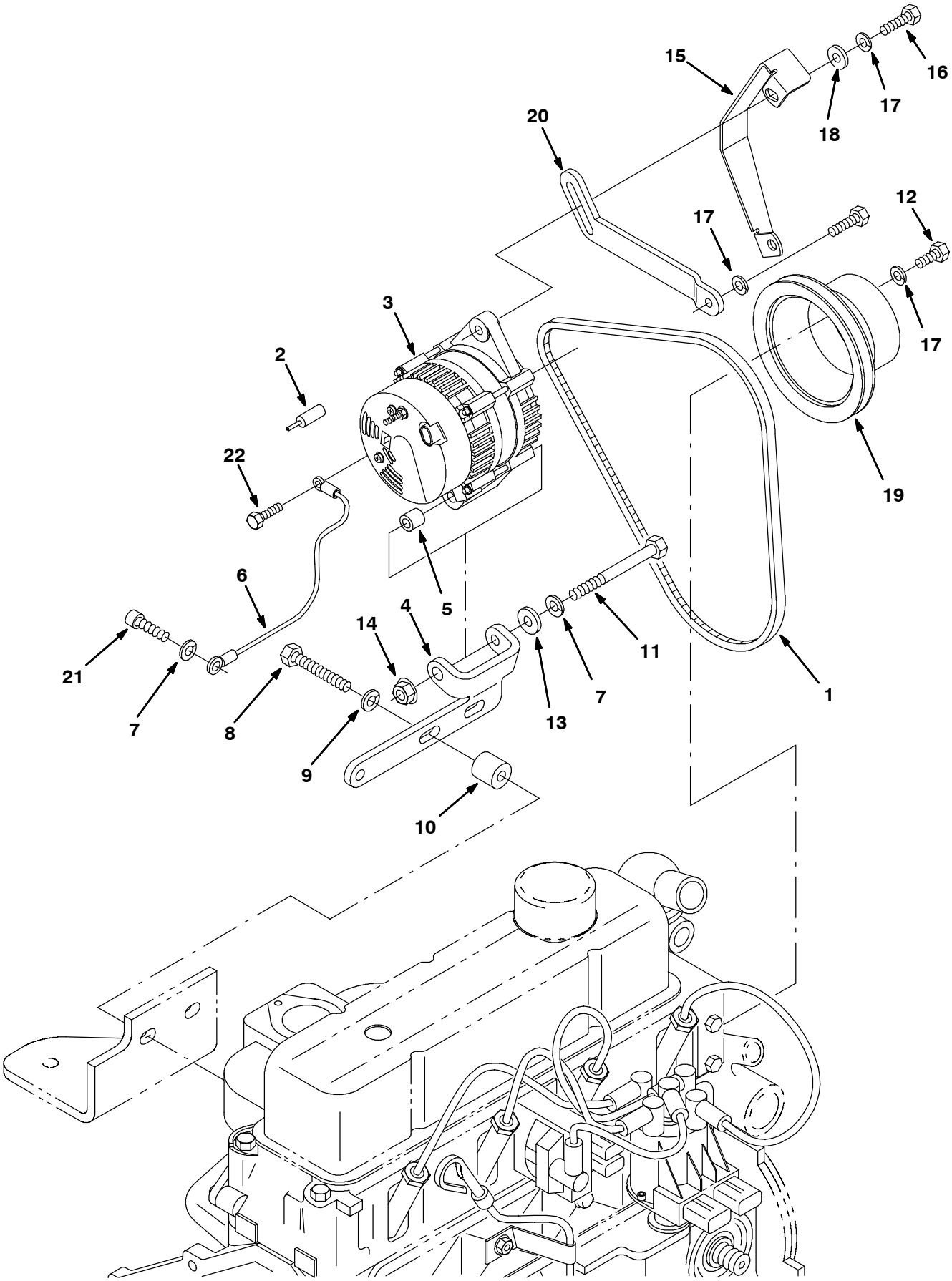

353841 - 8410, G, LP

Fig. 22 - Engine Alternator Group (013228-013999)

Ref.	Part No.	Serial Number	Description	Qty.
1	64899	(013228-013999)	Belt, V, [3v] 40.0l, 1only [Hc38]	1
2	61363	(013228-013999)	Boot, Str 0.42id .12h 0.25l	1
3	392611	(013228-013999)	Alternator, 12vdc, 075a [Valeo]	1
4	1008094	(013228-013999)	Bracket, Alternator	1
5	371526	(013228-013999)	Sleeve, Alternator	1
6	371527	(013228-013999)	Wire, Ground	1
7	371509	(013228-013999)	Washer, Lock, .38	2
8	27991	(013228-013999)	Screw, Hex, .38-16 X 2.25, 5	2
9	32492	(013228-013999)	Washer, Flat, .38 Std	2
10	35756	(013228-013999)	Tube, 01.00d 00.50b 01.0l Stl Pnt	2
11	371529	(013228-013999)	Screw, .38-24 X 4.0	1
12	07592	(013228-013999)	Screw, Hex, .31-24 X 0.75, 5	4
13	32485	(013228-013999)	Washer, Flat, .38 Sae	1
14	371528	(013228-013999)	Nut, Flanged, .38-24	1
15	83581	(013228-013999)	Guard, Belt, Alternator	1
16	76956	(013228-013999)	Screw, Hex, .31-18 X 1.25, 5	1
17	393994	(013228-013999)	Washer, Lock, .31	6
18	32491	(013228-013999)	Washer, Flat, .31 Std	1
19	393998	(013228-013999)	Pulley, Fan	1
20	1007162	(013228-013999)	Arm, Alternator	1
21	371770	(013228-013999)	Screw	1
22	42011	(013228-013999)	Screw,Hex, #10-24 X 0.50, Ss	1

Fig. 23 - Engine Alternator Group (014000-014999)

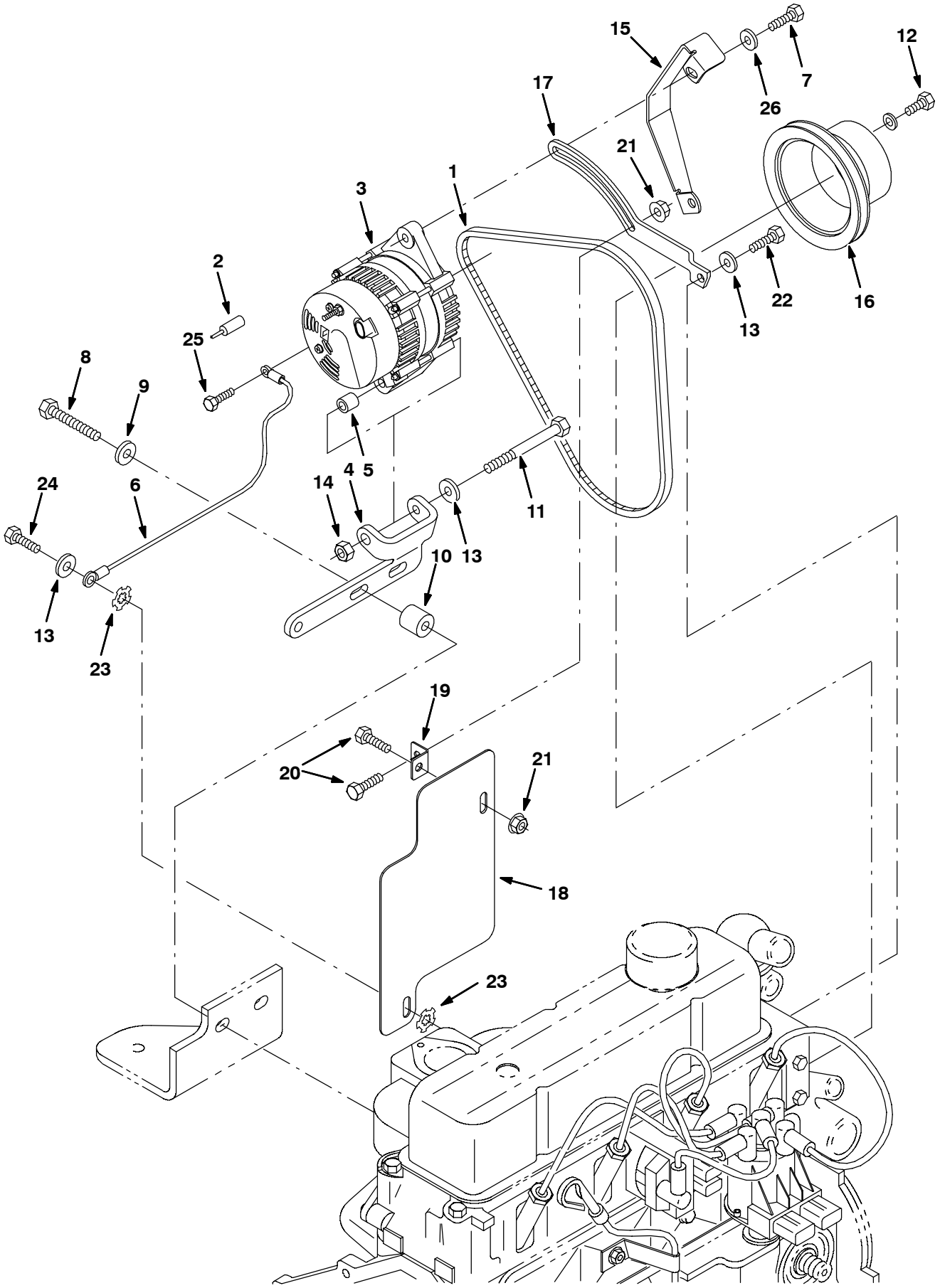

353841 - 800, G, LP

Fig. 23 - Engine Alternator Group (014000-014999)

Ref.	Part No.	Serial Number	Description	Qty.
1	64899	(014000-014999)	Belt, V, [3v] 40.0l, 1only [Hc38]	1
2	61363	(014000-014999)	Boot, Str 0.42id .12h 0.25l	1
3	392611	(014000-014999)	Alternator, 12vdc, 075a [Valeo]	1
4	1008094	(014000-014999)	Bracket, Alternator	1
5	371526	(014000-014999)	Sleeve, Alternator	1
6	371527	(014000-014999)	Wire, Ground	1
7	76955	(014000-014999)	Screw, Hex, .31-18 X 1.00, 5	1
8	27991	(014000-014999)	Screw, Hex, .38-16 X 2.25, 5	2
9	32492	(014000-014999)	Washer, Flat, .38 Std	2
10	35756	(014000-014999)	Tube, 01.00d 00.50b 01.0l Stl Pnt	2
11	20177	(014000-014999)	Screw, Hex, .38-16 X 4.00, 5	1
12	07592	(014000-014999)	Screw, Hex, .31-24 X 0.75, 5	4
13	32485	(014000-014999)	Washer, Flat, .38 Sae	3
14	50902	(014000-014999)	Nut, Hex, Lock, .38-16, Nl	1
15	83581	(014000-014999)	Guard, Belt, Alternator	1
16	393998	(014000-014999)	Pulley, Fan	1
17	1008519	(014000-014999)	Arm, Alternator	1
18	1008511	(014000-014999)	Plate, Shield, Heat	1
19	1008513	(014000-014999)	Angle, Heat, Shield	1
20	16735	(014000-014999)	Screw, Hex, M8 X 1.25 X 16, 8.8	2
21	07791	(014000-014999)	Nut, Hex, Flng, M8 X 1.25	2
22	21195	(014000-014999)	Screw, Hex, .38-16 X 0.75, 5	1
23	41142	(014000-014999)	Washer, Lock, Int-ext, .38	2
24	21197	(014000-014999)	Screw, Hex, .38-16 X 1.00, 5	1
25	42011	(014000-014999)	Screw, Hex, #10-24 X 0.50, Ss	1
26	41186	(014000-014999)	Washer, Belleville, .31	1

Fig. 24 - Engine Alternator Group (015000-)

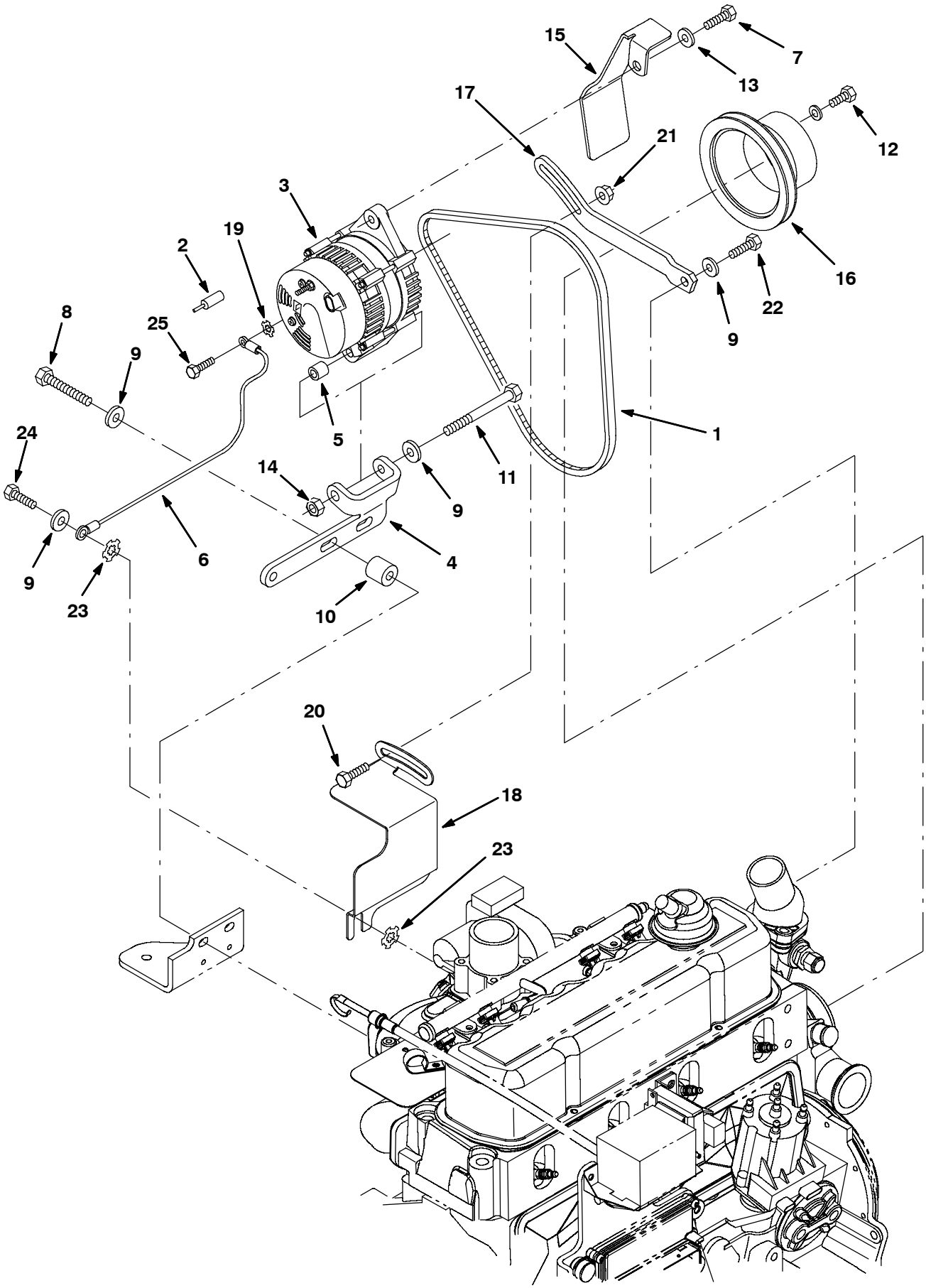

353841 – 800, G, LP

Fig. 24 - Engine Alternator Group (015000-)

Ref.	Part No.	Serial Number	Description	Qty.
1	393227	(015000-)	Belt, V, [3v] 39.6l [Hc41]	1
2	61363	(015000-)	Boot, Str 0.42id .12h 0.25l	1
3	392611	(015000-)	Alternator, 12vdc, 075a [Valeo]	1
4	1008094	(015000-)	Bracket, Alternator	1
5	371526	(015000-)	Sleeve, Alternator	1
6	371527	(015000-)	Wire, Ground	1
7	76955	(015000-)	Screw, Hex, .31-18 X 1.00, 5	1
8	27991	(015000-)	Screw, Hex, .38-16 X 2.25, 5	2
9	32485	(015000-)	Washer, Flat, 0.38 Sae	5
10	35756	(015000-)	Tube, 01.00d 00.50b 01.0l Stl Pnt	2
11	20177	(015000-)	Screw, Hex, .38-16 X 4.00, 5	1
12	07592	(015000-)	Screw, Hex, .31-24 X 0.75, 5	4
13	41186	(015000-)	Washer, Belleville, .31	1
14	50902	(015000-)	Nut, Hex, Lock, .38-16, Nl	1
15	1008538	(015000-)	Bracket, Guard, Alternator, Hd [Gm3.0l]	1
16	393998	(015000-)	Pulley, Fan	1
17	1029649	(015000-)	Arm, Adjmt, Alternator	1
18	1030635	(015000-)	Shield, Heat, Alternator [2007]	1
19	32980	(015000-)	Washer, Lock, Int, #10	1
20	16735	(015000-)	Screw, Hex, M8 X 1.25 X 16, 8.8	1
21	07791	(015000-)	Nut, Hex, Flng, M8 X 1.25	1
22	21195	(015000-)	Screw, Hex, .38-16 X 0.75, 5	1
23	41142	(015000-)	Washer, Lock, Int-ext, .38	2
24	21197	(015000-)	Screw, Hex, .38-16 X 1.00, 5	1
25	42011	(015000-)	Screw, Hex, #10-24 X 0.50, Ss	1

Fig. 25 - Engine Oil Filter and Drain Group (013228-)

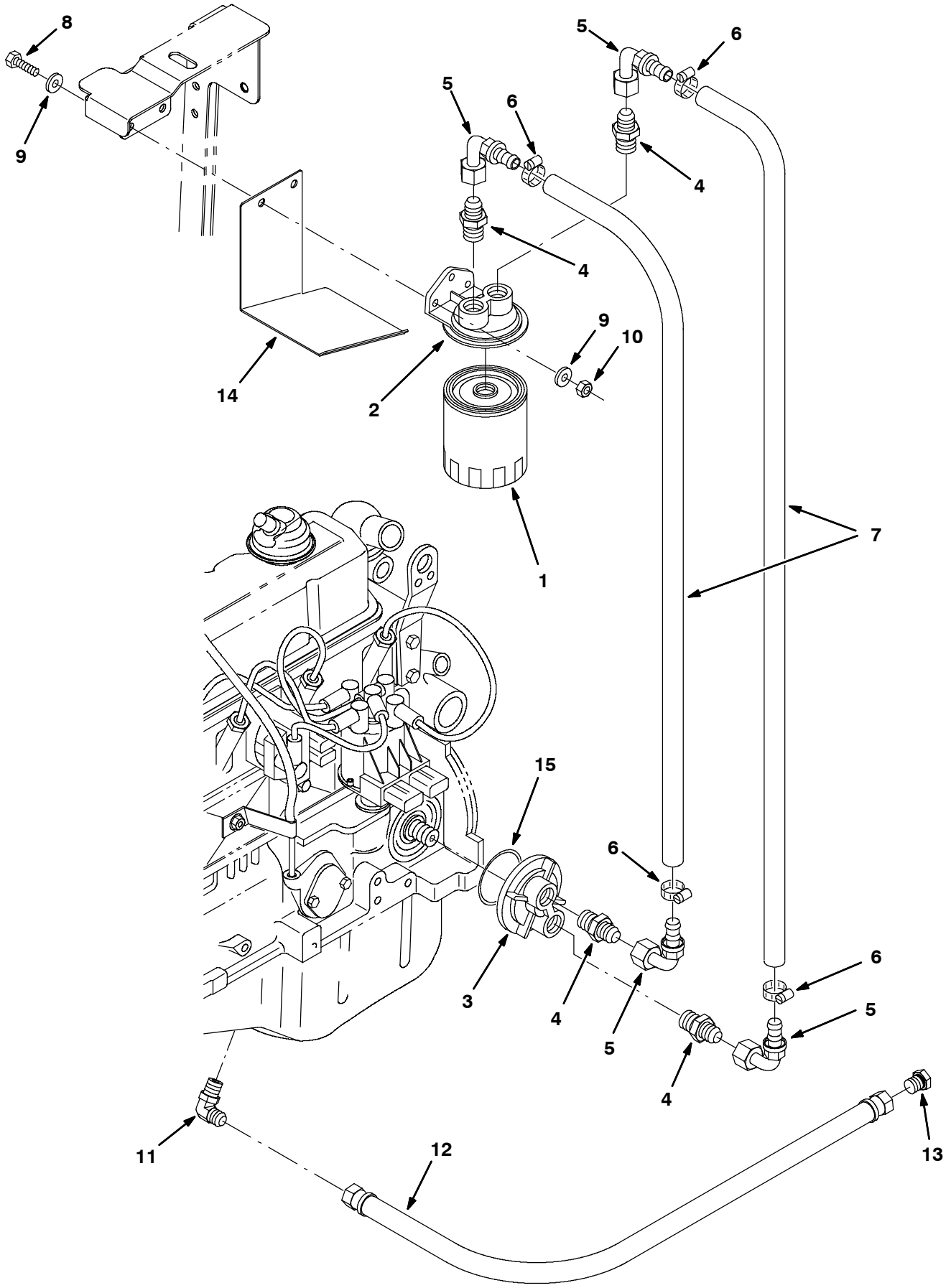

353843 - 8410, G, LP

Fig. 25 - Engine Oil Filter and Drain Group (013228-)

Ref.	Part No.	Serial Number	Description	Qty.
1	393982	(013228-)	Element, Fltr, Oil, Eng, Spin-On[Gm]	1
2	371503	(013228-)	Mount, Filter, Remote	1
3	371504	(013228-)	Adaptor, Filter, Remote	1
4	371505	(013228-)	Fitting	4
5	371500	(013228-)	Fitting, 90 Deg	4
6	11399	(013228-)	Clamp, Hose, Wormdrive, 0.81-1.50d	4
7	371502	(013228-)	Hose, .50	2
8	76956	(013228-)	Screw, Hex, .31-18 X 1.25, 5	2
9	32491	(013228-)	Washer, Flat, .31 Std	4
10	32983	(013228-)	Nut, Hex, Lock, .31-18, Nl	2
11	49934	(013228-)	Fitting, Hyd, E90, Pm06/Jm06	1
12	76762	(013228-)	Hose, Hyd,Low06, Jf06str /Jf06str , 26.0	1
13	19747	(013228-)	Fitting, Hyd, Plug, Jm06	1
14	1016322	(013228-)	Bracket, Tray, Drip	1
15	1032382	(013228-)	Seal, Org, .139 X 03.109 Id	1

Fig. 26 - Engine Carburetor & Governor Group, Gasoline (000000-013227)

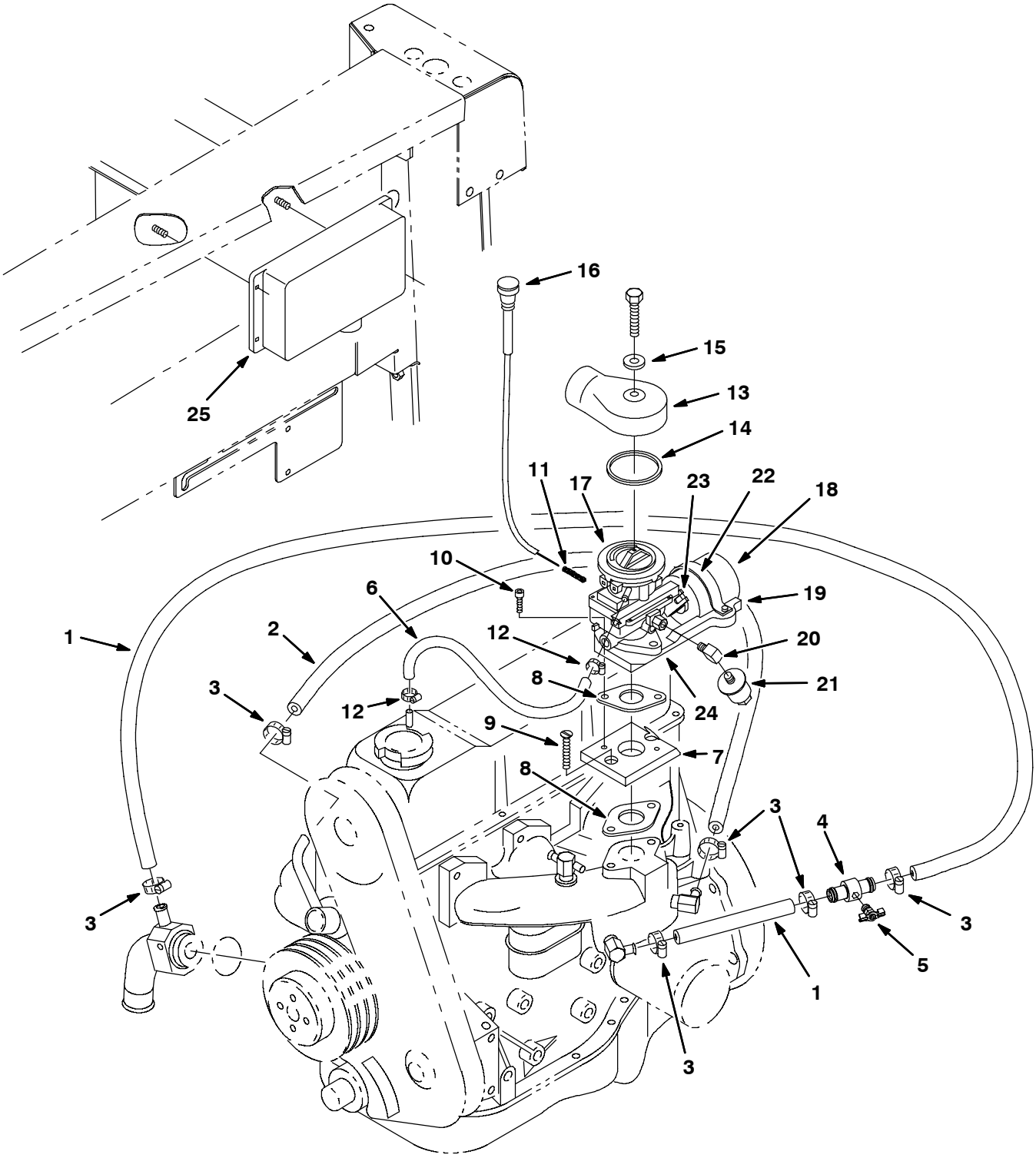

11008 - 8410, G

Fig. 26 - Engine Carburetor & Governor Group, Gasoline (000000-013227)

	Ref.	Part No.	Serial Number	Description	Qty.
	1	30389	(000000–013227)	Hose, Heater	1
	2	13048	(000000–013227)	Hose, Heater	1
	3	63810	(000000–013227)	Clamp, Wormdrive	6
	4	83578	(000000–013227)	Tvbe, Air Bleed	1
	5	83580	(000000–013227)	Fitting, Brass Drain Cock	1
	6	70876	(000000–012654)	Hose, Rubber	1
	6	375718	(012655–013227)	Hose, Molded	1
	7	83686	(000000–013227)	Adaptor, Carburetor	1
	8	74443	(000000–013227)	Gasket	2
	9	32129	(000000–013227)	Screw, Flat, M08-1.25X 20,10.9	2
	10	33951	(000000–013227)	Screw, Soc, M06-1.0 X 20,12.9	2
	11	58846	(000000–013227)	Spring, Compression	2
	12	43844	(000000–013227)	Clamp, Wormdrive	1
	13	57934	(000000–013227)	Adaptor, Elbow, Carburetor	1
	14	16738	(000000–013227)	Gasket	1
	15	24924	(000000–013227)	Washer	1
	16	47313A	(000000–013227)	Cable, Choke	1
▽		374590	(000000–012574)	Governor Assy, 8410Gas 2.3	1
▲▽		83639	(000000–012574)	Governor, Gas	1
▲▲	17	78897	(000000–012574)	Carburetor, Gas [F/ LRG-423, Vent, Ze]	1
▲▲	18	83683	(000000–012574)	Actuator	1
▲▲	19	83682	(000000–012574)	Bracket	1
▲▲	20	11984	(000000–012574)	Fitting, Elbow	1
▲▲	21	36050	(000000–012574)	Filter, Fuel	1
▲▲	22	83685	(000000–012574)	Strap. Mounting, Actuator	1
▲▲	23	83684	(000000–012574)	Linkage Kit	1
▲▲	24	74443	(000000–012574)	Gasket	1
▲▽	25	374592	(000000–012574)	Control Unit, Gov (Replaced by 374127)	1
▲▲		374625	(000000–012574)	Plug, Control Box	2
▽		385435	(012575–013227)	Governor Assy, Ford 2.5 Gas	1
▲	17	385414	(012575–013227)	Carburetor, Gas [F/ LRG-425, Vent, Ze]	1
▲	18	83683	(012575–013227)	Actuator	1
▲	19	83682	(012575–013227)	Bracket	1
▲	20	11984	(012575–013227)	Fitting, Elbow	1
▲	21	36050	(012575–013227)	Filter, Fuel	1
▲	22	83685	(012575–013227)	Strap. Mounting, Actuator	1
▲	23	83684	(012575–013227)	Linkage Kit	1
▲	24	74443	(012575–013227)	Gasket	1
▲		374127	(xxxxxx–013227)	Kit, Replmt, Control, Govnr, [All Purps]	1
▽	25	385437	(012575–xxxxxx)	Control, Gov. 1475,2000,2600 E (Replaced by 374127)	1
▲		374625	(012575–xxxxxx)	Plug, Control Box	2

Fig. 27 - Engine EFI Group, Gas (013228-013999)

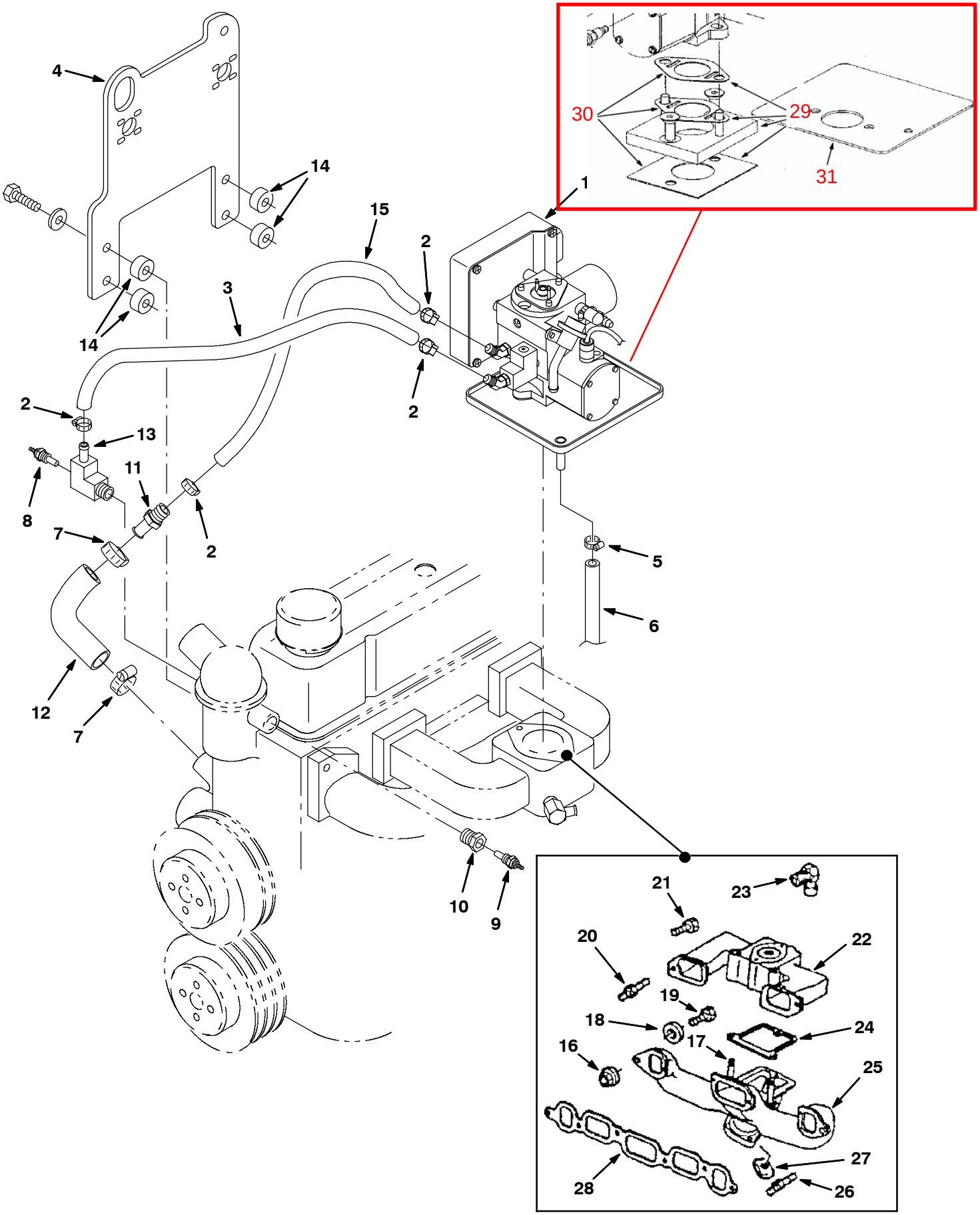

353844 - 8410, G

Fig. 27 - Engine EFI Group, Gas (013228-013999)

Ref.	Part No.	Serial Number	Description	Qty.
1	371896	(013228-013999)	Housing Assy, Throttle, Gas, [With Ecu] (See Breakdowns)	1
1	371897	(013228-013999)	Housing Assy, Throttle, Gas, [Without Ecu] (See Breakdowns)	1
2	371538	(013228-013999)	Clamp	5
3	371532	(013228-013999)	Hose, Heater, 0.38id	1
4	392570	(013228-013999)	Plate	1
5	86824	(013228-013999)	Clamp, Hose, Wormdrive, 0.50-1.06d	1
6	71427	(013228-013999)	Hose, Fuel, 0.50id 34.0l	1
7	11399	(013228-013999)	Clamp, Hose, Wormdrive, 0.81-1.50d	2
8	371764	(013228-013999)	Sensor, Water Temp	1
9	36165	(013228-013999)	Send-unit, Water, Temperature, .38npt	1
10	47167	(013228-013999)	Fitting, Brs, Str, Pm08/Pf06	1
11	371763	(013228-013999)	Fitting, Hose	1
12	371765	(013228-013999)	Hose	1
13	371766	(013228-013999)	Fitting, Elbow	1
14	371767	(013228-013999)	Spacer	4
15	769808	(013228-013999)	Hose, Heater, 0.38id x 18.0l	1
16	393905	(013228-013999)	Nut	8
17	393906	(013228-013999)	Stud	2
18	393907	(013228-013999)	Washer	-
19	393898	(013228-013999)	Bolt	3
20	393908	(013228-013999)	Stud	1
21	393909	(013228-013999)	Bolt	-
22	393910	(013228-013999)	Manifold, Intake	1
23	393911	(013228-013999)	Fitting	1
24	393912	(013228-013999)	Gasket	1
25	393913	(013228-013999)	Manifold, Exhaust	1
26	393914	(013228-013999)	Stud	2
27	393915	(013228-013999)	Clamp	4
28	393916	(013228-013999)	Gasket	1

these parts are NOT included in #1;

29 371646 Kit, Adaptor
30 371647 Kit, Gasket (part of #29)
31 371658 Shield, Heat

Fig. 28 - Engine EFI Group, Gas (014000-014999)

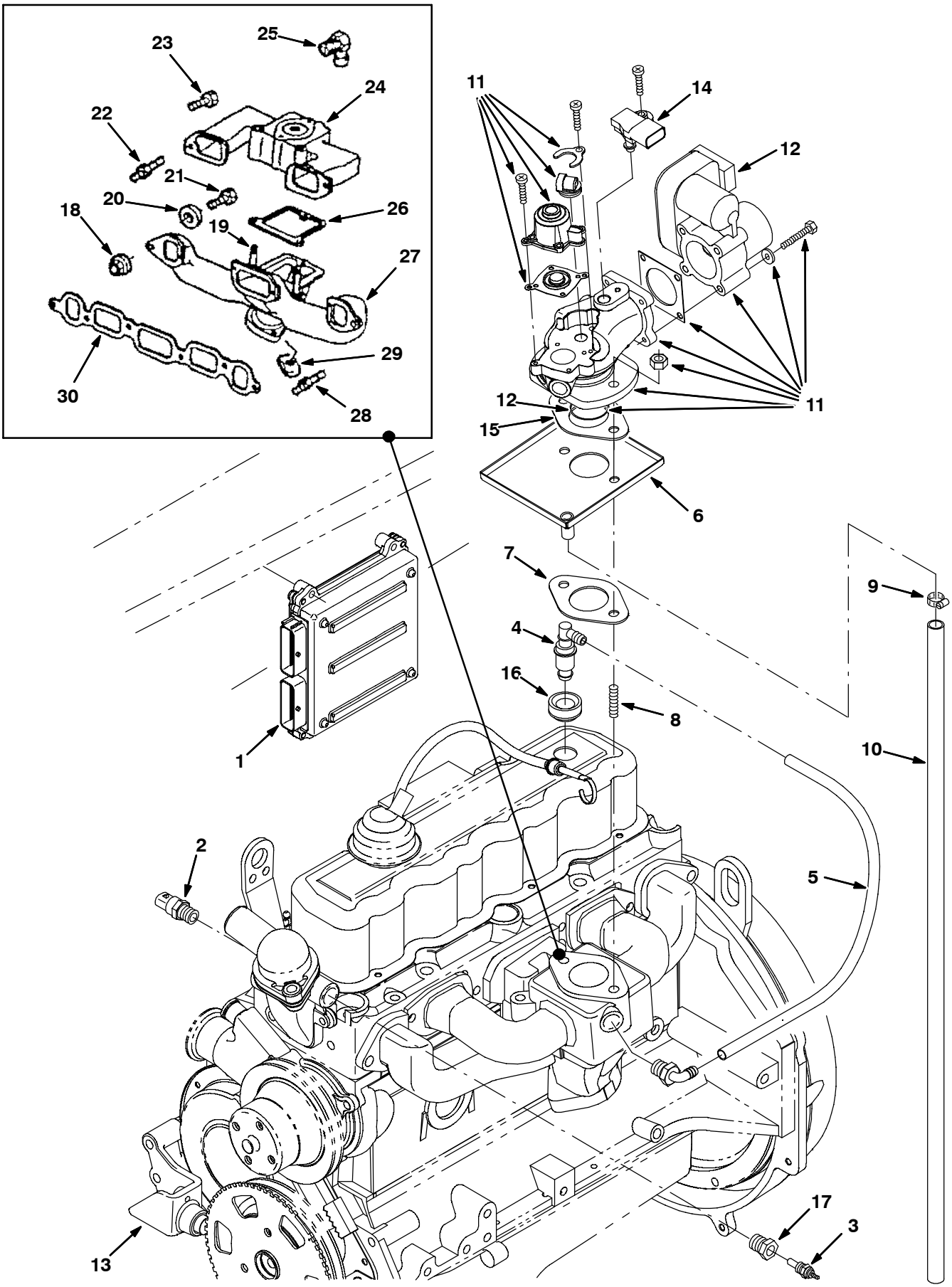

354177 - 8410, G

Fig. 28 - Engine EFI Group, Gas (014000-014999)

	Ref.	Part No.	Serial Number	Description	Qty.
	1	372860	(014000-014999)	Module, Ecu, Gas [Gm 3.0l]	1
	2	372891	(014000-014999)	Sensor, Temp, Coolant	1
	3	372472	(014000-014999)	Sensor, Temp	1
	4	372483	(014000-014999)	Valve, [Pcv]	1
	5	372489	(014000-014999)	Hose, 9.5mm X 450mm [Pcv]	1
	6	1013350	(014000-014999)	Tray Wldt, Drip, Gas [3.0l]	1
	7	372490	(014000-014999)	Gasket, Carb	1
	8	372466	(014000-014999)	Stud, .38-16 X 1.2l	2
	9	86824	(014000-014999)	Clamp, Hose, Wormdrive, 0.50-1.06d	1
	10	16387	(014000-014999)	Hose, Fuel, 0.50id 52.0l	1
▽		372488	(014000-014999)	Housing Assy, Throttle, Gas	1
▲	11	372482	(014000-014999)	Housing, Throttle, 40mm [Bosch]	1
	12	393984	(014000-014999)	Grommet	1
	13	372492	(014000-014999)	Sensor, Speed, Timing Wheel [3.0l]	1
	14	372493	(014000-014999)	Sensor, [Tmap]	1
	15	372490	(014000-014999)	Gasket, Carb	1
	16	372484	(014000-014999)	Seal, Org	1
	17	47167	(014000-014999)	Fitting, Brs, Str, Pf06/Pm08	1
	18	393905	(014000-014999)	Nut	8
	19	393906	(014000-014999)	Stud	2
	20	393907	(014000-014999)	Washer	-
	21	393898	(014000-014999)	Bolt	3
	22	393908	(014000-014999)	Stud	1
	23	393909	(014000-014999)	Bolt	-
	24	393910	(014000-014999)	Manifold, Intake	1
	25	393911	(014000-014999)	Fitting	1
	26	393912	(014000-014999)	Gasket	1
	27	393913	(014000-014999)	Manifold, Exhaust	1
	28	393914	(014000-014999)	Stud	2
	29	393915	(014000-014999)	Clamp	4
	30	393916	(014000-014999)	Gasket	1

Fig. 29 - Engine Electronic Fuel Ignition Group, Gas (015000-)

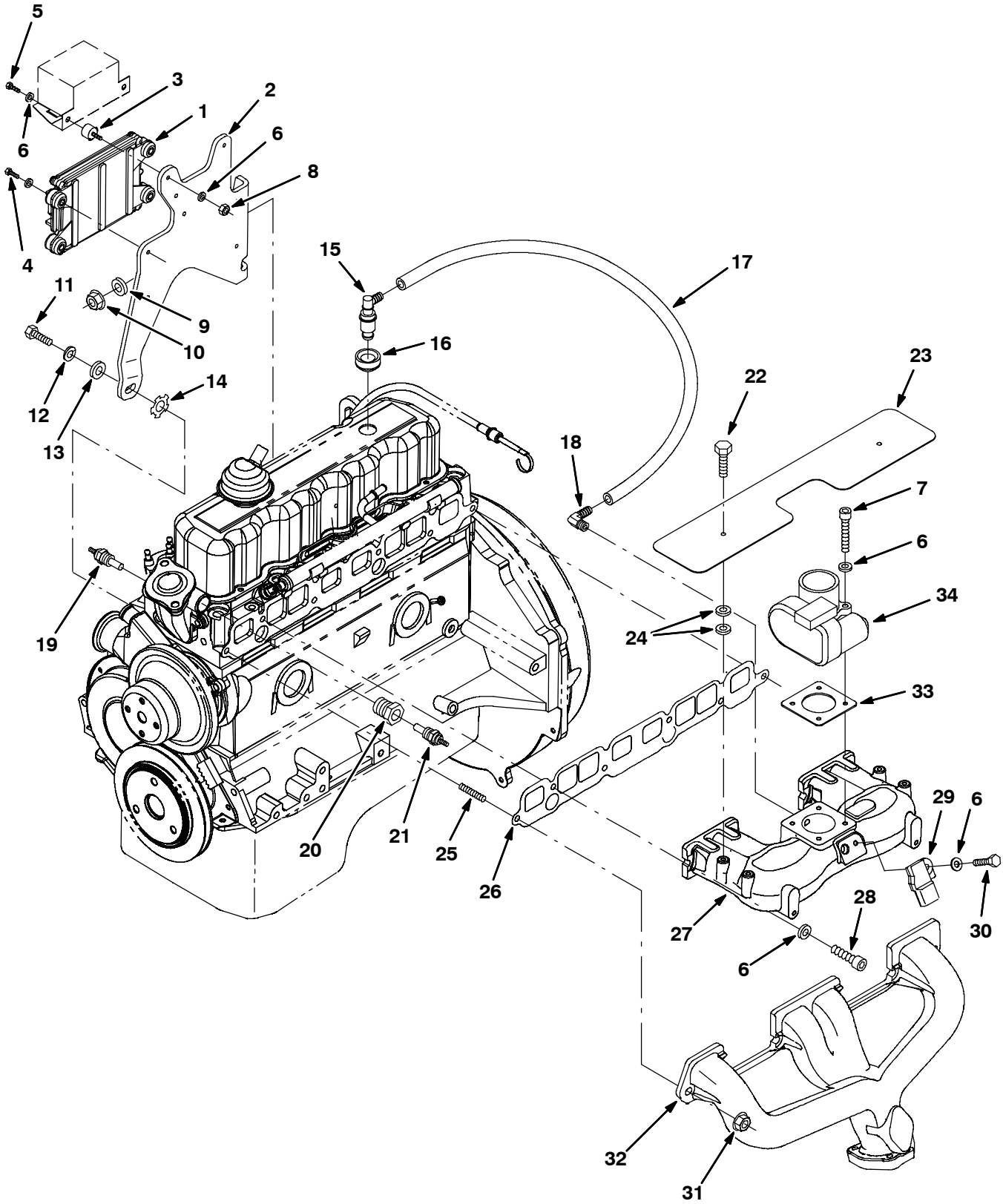

354174 - 8410, 800 G

Fig. 29 - Engine Electronic Fuel Ignition Group, Gas (015000-)

Ref.	Part No.	Serial Number	Description	Qty.
1	1032804	(015000-)	Module, Ecu, Gas [Gm3.0l 2007]	1
2	385008	(015000-)	Bracket, Box, Relay	1
3	372470	(015000-)	Vr, Isolator, Box, Relay	1
4	25047	(015000-)	Screw, Hex, .25-20 X 1.25, G5	1
5	19315	(015000-)	Screw, Hex, .25-20 X 0.50, G5	1
6	32490	(015000-)	Washer, Flat, 0.25, Std	13
7	06948	(015000-)	Screw, Hex, M6 X 1.0 X 45, 8.8	4
8	19312	(015000-)	Nut, Hex, Std, .25-20	2
9	371877	(015000-)	Vr, Washer, Flat, 0.38, Hardened	1
10	27980	(015000-)	Nut, Hex, Flng, .38-16	1
11	371553	(015000-)	Screw, .38-16 X 1.00	1
12	371877	(015000-)	Washer, Flat, 0.38, Hardened	1
13	371509	(015000-)	Washer, Lock, 0.38	1
14	371875	(015000-)	Washer, Lock, Int / Ext, 0.38	1
15	372483	(015000-)	Valve [Pcv]	1
16	393984	(015000-)	Grommet	1
17	385001	(015000-)	Hose, Fuel, .38d, Rbr	1
18	385002	(015000-)	Fitting, E90	1
19	372891	(015000-)	Sensor, Temp, Coolant	1
20	385000	(015000-)	Fitting, Bshg	1
21	372472	(015000-)	Sensor, Temp	1
22	385007	(015000-)	Screw, M6 X 10mm	2
23	385006	(015000-)	Shield, Heat, Manifold	1
24	371877	(015000-)	Washer, Flat, 0.38, Hardened	4
25	372466	(015000-)	Stud, .38-16 X 1.2l	2
26	385003	(015000-)	Gasket, Manifold, Intake	1
27	385004	(015000-)	Manifold, Intake [2007]	1
28	10830	(015000-)	Screw, Soc, .38-16 X 1.00, Al	4
29	384985	(015000-)	Sensor [T Map]	1
30	19317	(015000-)	Screw, Hex, .25-20 X 0.75, G5	1
31	27980	(015000-)	Nut, Hex, Flng, .38-16	1
32	385005	(015000-)	Manifold, Exhaust [2007]	1
33	372545	(015000-)	Gasket, Body, Throttle [1.6l]	1
34	384974	(015000-)	Housing, Throttle, 40mm [Bosch]	1

Fig. 30 - Engine Carburetor & Governor Group, LPG (000000-013227)

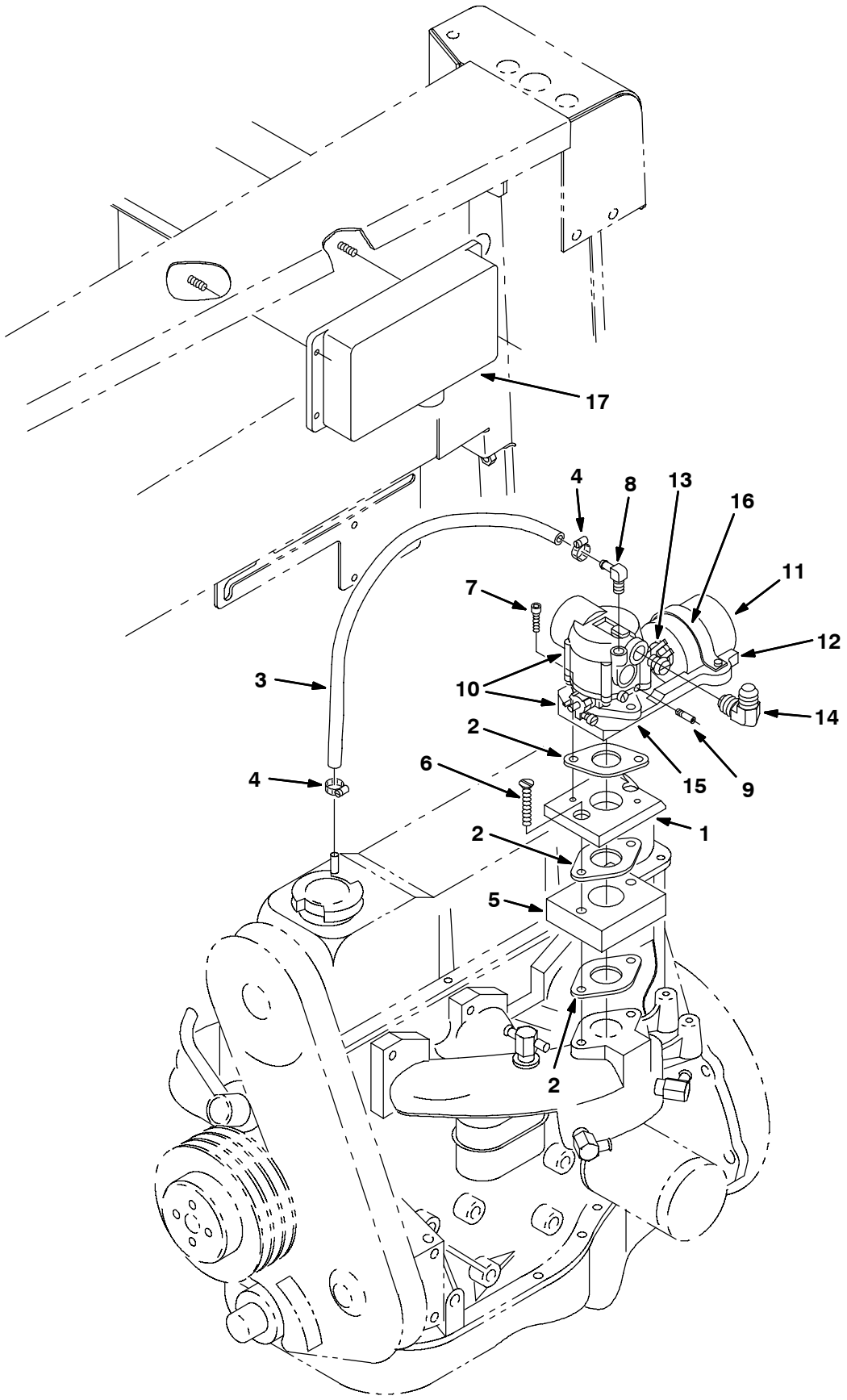

11010 - 8410, LP

Fig. 30 - Engine Carburetor and Governor Group, LPG (000000-013227)

	Ref.	Part No.	Serial Number	Description	Qty.
	1	83686	(000000–013227)	Adapter, Carburetor, Ford 2.3	1
	2	74443	(000000–013227)	Gasket, Carb To Engine	3
	3	70876	(000000–012654)	Hose, Rubber	1
	3	375718	(012655–013227)	Hose, Molded	1
	4	43844	(000000–013227)	Clamp-Wormdrive, 0.25- 0.62D	2
	5	83587	(000000–013227)	Spacer, Carb F/Impco Ca-50	1
	6	73817	(000000–013227)	Screw Flat M8X1.25 50	2
	7	33951	(000000–013227)	Screw Soc M 6X1.0	2
	8	53029	(000000–013227)	Fitting, Brass, Elbow	1
	9	74402	(000000–013227)	Fitting, Special	1
▽		374591	(000000–012574)	Governor Assy, 8410 Lpg	1
▲▽		83640	(000000–012574)	Governor, Lpg	1
▲▲	10	73017	(000000–012574)	Carburetor, Lpg, With Gasket	1
▲▲	11	83683	(000000–012574)	Actuator	1
▲▲	12	83682	(000000–012574)	Bracket	1
▲▲	13	83684	(000000–012574)	Linkage Kit	1
▲▲	14	69097	(000000–012574)	Fitting, Hyd, Elbow	1
▲▲	15	74443	(000000–012574)	Gasket	1
▲▲	16	83685	(000000–012574)	Strap. Mounting, Actuator	1
▲▽	17	374592	(000000–012574)	Control Unit, Gov (Replaced by 374127)	1
▲▲		374625	(000000–012574)	Plug, Control Box	2
▽		385436	(012575–013227)	Governor Assy, Ford 2.5 Lpg	1
▲▽		83640	(012575–013227)	Governor, Lpg	1
▲▲	10	73017	(012575–013227)	Carburetor, Lpg, With Gasket	1
▲▲	11	83683	(012575–013227)	Actuator	1
▲▲	12	83682	(012575–013227)	Bracket	1
▲▲	13	83684	(012575–013227)	Linkage Kit	1
▲▲	14	69097	(012575–013227)	Fitting, Hyd, Elbow	1
▲▲	15	74443	(012575–013227)	Gasket	1
▲▲	16	83685	(012575–013227)	Strap. Mounting, Actuator	1
▲▲		374127	(xxxxxx–013227)	Kit, Replmt, Control, Govnr, [All Purps]	1
▽	17	385437	(012575–xxxxxx)	Control, Gov. 1475,2000,2600 E (Replaced by 374127)	1
▲		374625	(012575–xxxxxx)	Plug, Control Box	2

Fig. 31 - Engine Vaporizer Group, LPG (000000-013087)

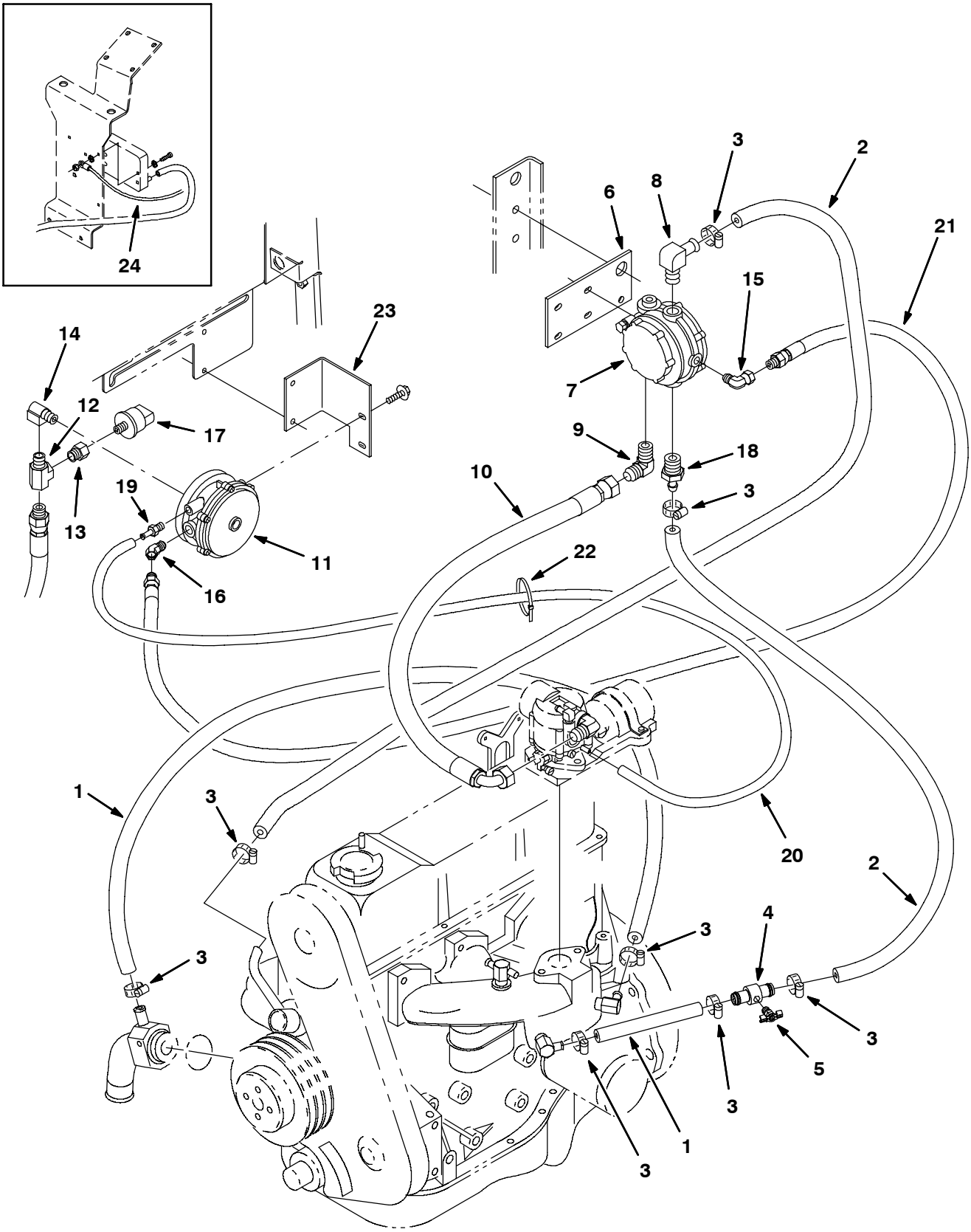

11012 - 8410, LP

Fig. 31 - Engine Vaporizer Group, LPG (000000-013087)

	Ref.	Part No.	Serial Number	Description	Qty.
	1	30389	(000000-013087)	Hose,Heater .62Idx53.0Lg	1
	2	13048	(000000-013087)	Hose,Heater .62Idx31.0Lg	2
	3	63810	(000000-013087)	Clamp-Wormdrive, 0.56- 1.06D	8
	4	83578	(000000-013087)	Tube, Air Bleed	1
	5	83580	(000000-013087)	Fitting, Brass Drain Cock	1
	6	385425	(000000-013087)	Plate, Mounting, Vaporizer	1
▽	7	374648	(000000-013087)	Vaporizer, Lpg	1
▲		374649	(000000-013087)	Vaporizer Repair Kit	1
▲		374532	(000000-013087)	High Alt Vaporizer Spring	1
	8	51839	(000000-013087)	Ftg-Brs E90 Bm10/Pm06	1
	9	05494	(000000-013087)	Ftg-Hyd E90 Pm08/Jm12	1
	10	84006	(000000-013087)	Hose-Lpg Med12 Spcl S12Jf/10J9	1
	11	73020	(000000-013087)	Filter, Fuelockoff, Lpg	1
	12	56976A	(000000-013087)	Ftg-Tee Npt 04Pm- 04Pf- 04Pf	1
	13	17414	(000000-013087)	Ftg-Hyd Str Pm04/Pf02	1
	14	27048	(000000-013087)	Fitting, Brass E90	1
	15	11442-1	(000000-013087)	Ftg-El90 Npt/Npt S04Pf-04Pm	1
	16	47720	(000000-013087)	Ftg-Hyd E45	1
	17	23156	(000000-013087)	Switch, Pressure, Lpg Nc 70Psi	1
	18	27767	(000000-013087)	Fitting Brass Str	1
	19	40607	(000000-013087)	Ftg,Brass,St Bm03/Pm02	1
	20	369723	(000000-013087)	Hose, Vacuum	1
	21	22308-3	(000000-013087)	Hose, LPG	1
	22	49266	(000000-013087)	Tie, Cable	2
	23	369719	(000000-013087)	Angle	1
	24	374615	(000000–012400)	Wire Kit	1

Fig. 32 - Engine Vaporizer Group, LPG (013088-013227)

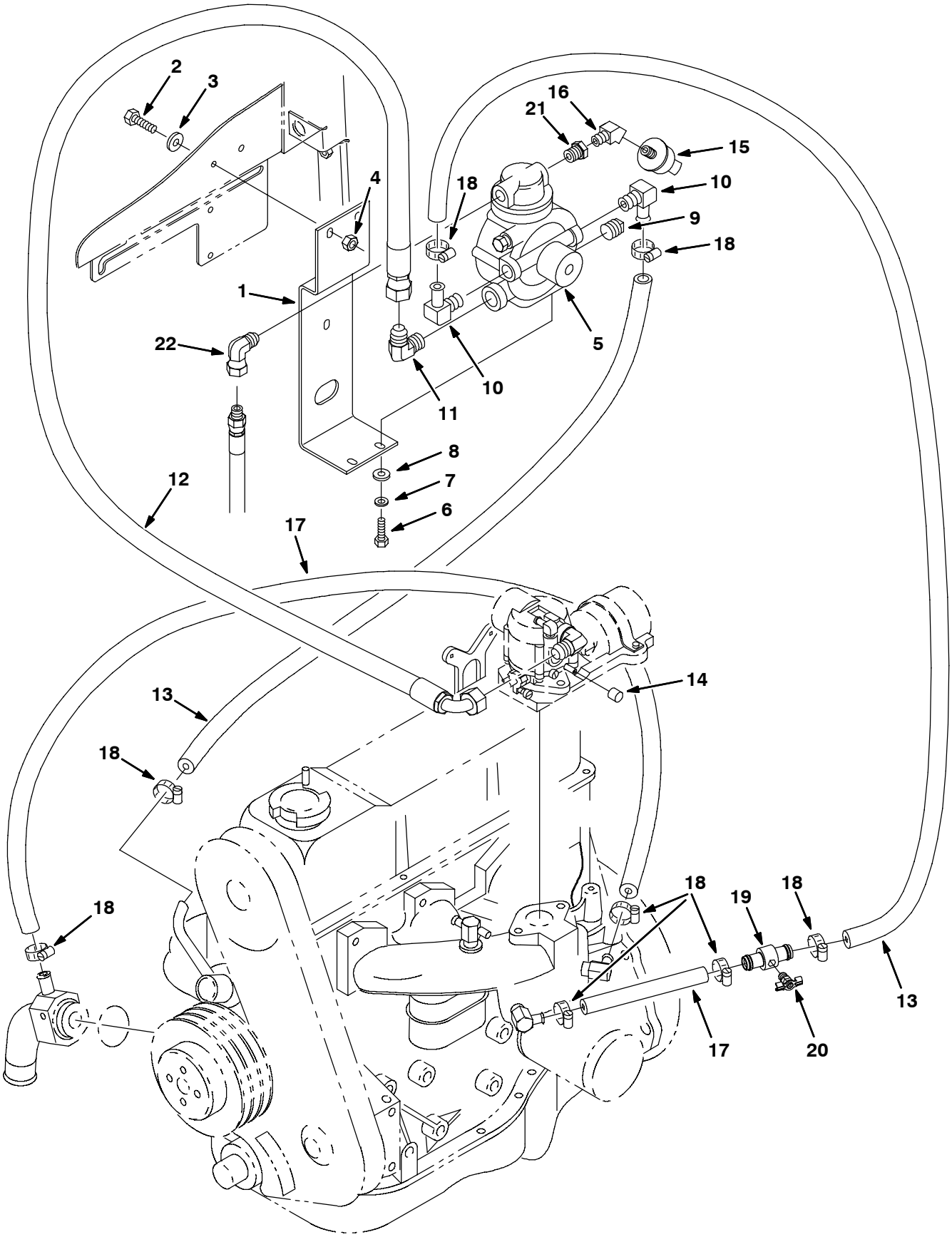

11012 - 8410, LP

Fig. 32 - Engine Vaporizer Group, LPG (013088-013227)

	Ref.	Part No.	Serial Number	Description	Qty.
	1	374153	(013088-013227)	Bracket, Mtg, Regulator/Lockoff	1
	2	06943	(013088-013227)	Screw, Hex, M06 X 1.0 X 20, 8.8	4
	3	32483	(013088-013227)	Washer, Flt, .25 Sae	4
	4	07790	(013088-013227)	Nut, Hex, Flng, M06 X 1.0	4
▽	5	383170	(013088-013227)	Controller, Lpg, 12vdc	1
▲		383014	(013088-013227)	Kit, Repair, Vaporizer, F/383170	1
	6	06942	(013088-013227)	Screw, Hex, M06 X 1.0 X 16, 8.8	2
	7	32982	(013088-013227)	Washer, Lock, Int, .25	2
	8	32483	(013088-013227)	Washer, Flt, .25 Sae	2
	9	17521	(013088-013227)	Fitting, Plug, Pm08 Sq Head	1
	10	51839	(013088-013227)	Fitting, Brs, E90, Pm06/Em10	2
	11	46611	(013088-013227)	Fitting, Hyd, E90, Pm08/Jm10	1
	12	374155	(013088-013227)	Hose, Lpg, 52 L	1
	13	374157	(013088-013227)	Hose, Heater, 0.62id 48.0L	2
	14	630094	(013088-013227)	Grip, Console Adjust Lever	1
	15	23156	(013088-013227)	Switch	1
	16	24976	(013088-013227)	Fitting, Brs, E45, Pm02/Pf02	1
	17	30389	(013088-013227)	Hose, Heater, 0.62id 53.0l (Cut in 2)	1
	18	63810	(013088-013227)	Clamp, Hose, Wormdrive, 0.56-1.06d	8
	19	83578	(013088-013227)	Tube, Air Bleed	1
	20	83580	(013088-013227)	Fitting, Brs, Drain Cock	1
	21	17414	(013088-013227)	Fitting, Hyd, Str, Pm04/Pf02	1
	22	11442-1	(013088-013227)	Fitting, Hyd, E90, Swivel Pf04/Pm04	1

Fig. 33 - Engine EFI and Vaporizer Group, LPG (013228-013999 version 1)

NOTE: Repair parts in this Serial Number range are identified in Fig.30 or Fig. 31.

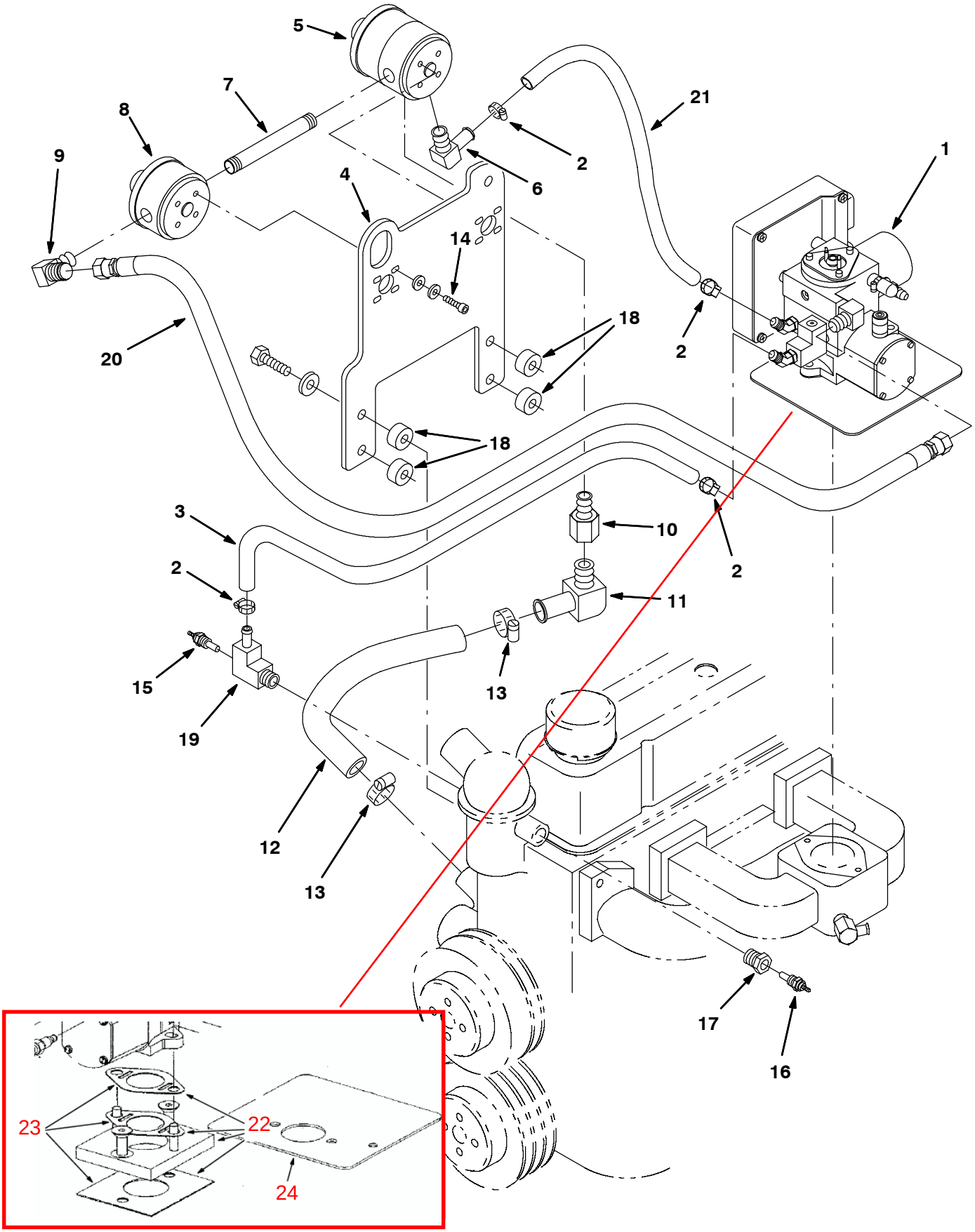

353845 - 8410, LP

Fig. 33 - Engine EFI and Vaporizer Group, LPG (013228-013999 version 1)

NOTE: Repair parts in this Serial Number range are identified in Fig.30 or Fig. 31.

Ref.	Part No.	Serial Number	Description	Qty.
1	371894	(013228-013999)	Housing Assy, Throttle, Lpg, [With Ecu] (See Breakdowns)	1
1	371895	(013228-013999)	Housing Assy, Throttle, Lpg, [Without Ecu] (See Breakdowns)	1
2	371538	(013228-013999)	Clamp	4
3	769808	(013228-013999)	Hose, Heater, 0.38id x 18	2
4	392570	(013228-013999)	Plate	1
5	371749	(013228-013999)	Vaporizer	1
6	371754	(013228-013999)	Fitting	1
7	371755	(013228-013999)	Pipe	1
8	371750	(013228-013999)	Regulator	1
9	371758	(013228-013999)	Fitting	1
10	371768	(013228-013999)	Fitting	1
11	371757	(013228-013999)	Fitting	1
12	393972	(013228-013999)	Hose, Conv	1
13	11399	(013228-013999)	Clamp, Hose, Wormdrive, 0.81-1.50d	2
14	371759	(013228-013999)	Screw	8
15	371764	(013228-013999)	Sensor, Water Temp	1
16	36165	(013228-013999)	Send-unit, Water, Temperature, .38npt	1
17	47167	(013228-013999)	Fitting, Brs, Str, Pm08/Pf06	1
18	371767	(013228-013999)	Spacer	4
19	371766	(013228-013999)	Fitting, Elbow	1
20	07597	(013228-013999)	Hose, Hi Press, Lp	1
21	769806	(013228-013999)	Hose, Heater, 0.38id x 21.0id	1

these parts are NOT included in #1;

22 371646 Kit, Adaptor

23 371647 Kit, Gasket (part of #22)

24 371658 Shield, Heat

Fig. 34 - Engine EFI and Vaporizer Group, LPG (013228-013999 version 2)

NOTE: Repair parts in this Serial Number range are identified in Fig.30 or Fig. 31.

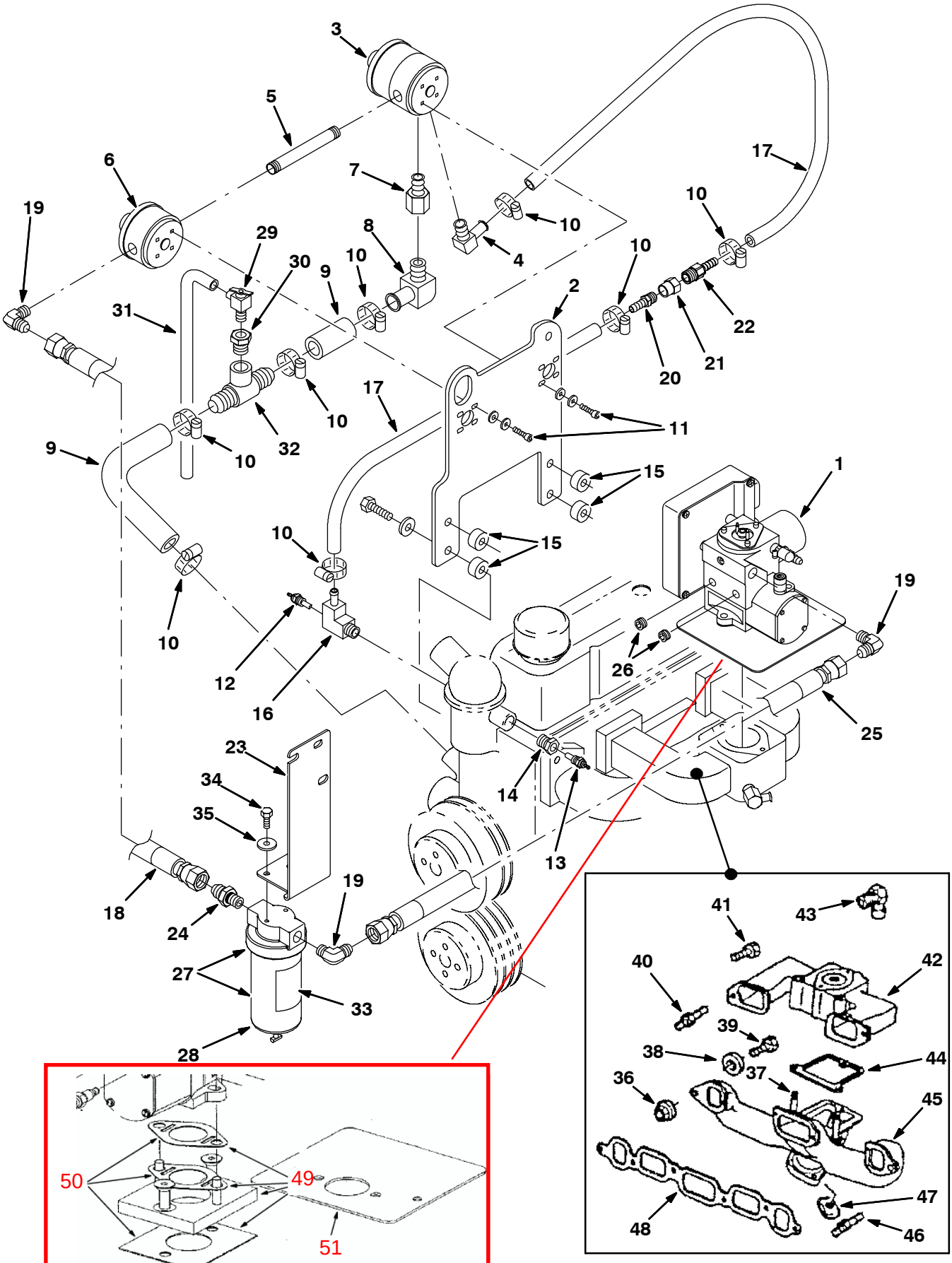

354272 - 8410, LP

Fig. 34 - Engine EFI and Vaporizer Group, LPG (013228-013999 version 2)

NOTE: Repair parts in this Serial Number range are identified in Fig.30 or Fig. 31.

	Ref.	Part No.	Serial Number	Description	Qty.
	1	371894	(013228-013999)	Housing Assy, Throttle, Lpg, [With Ecu] (See Breakdowns)	1
	1	371895	(013228-013999)	Housing Assy, Throttle, Lpg, [Without Ecu] (See Bkdns)	1
	2	392570	(013228-013999)	Plate	1
	3	371749	(013228-013999)	Vaporizer	1
	4	371754	(013228-013999)	Fitting	1
	5	371755	(013228-013999)	Pipe	1
	6	371750	(013228-013999)	Regulator	1
	7	371768	(013228-013999)	Fitting	1
	8	371757	(013228-013999)	Fitting	1
	9	393972	(013228-013999)	Hose, Conv	1
	10	11399	(013228-013999)	Clamp, Hose, Wormdrive, 0.81-1.50d	8
	11	371759	(013228-013999)	Screw	8
	12	371764	(013228-013999)	Sensor, Water Temp	1
	13	36165	(013228-013999)	Send-unit, Water, Temperature, .38npt	1
	14	47167	(013228-013999)	Fitting, Brs, Str, Pm08/Pf06	1
	15	371767	(013228-013999)	Spacer	4
	16	371766	(013228-013999)	Fitting, Elbow	1
	17	769806	(013228-013999)	Hose, Heater, 0.38id x 21.0id	1
	18	1017471	(013228-013999)	Hose, Lpg, Med08, Jf08str/Jf08str , 8.5	1
	19	1017272	(013228-013999)	Fitting, Hyd, E90, Jm08/Pm04	3
	20	150516	(013228-013999)	Fitting, Brs, Str, Pm04/Bm06, T	1
	21	1017239	(013228-013999)	Fitting, Brs, Rst, Pf04/.69-16f, .063	1
	22	1017598	(013228-013999)	Fittting, Plstc, Str, Bm06/M.69-16	1
	23	1017072	(013228-013999)	Bracket, Fltr, Lpg [8410]	1
	24	87833	(013228-013999)	Fitting, Hyd, Str, Pm04/Jm08	1
	25	1017475	(013228-013999)	Hose, Lpg, Med08, Jf08str/Jf08str , 10.5	1
	26	02247	(013228-013999)	Fitting, Pipe, Plug, Pm04 Hex Soc	2
▽	27	1017500	(013228-013999)	Filter, Fuel, Lpg [Coalescent]	1
▲	28	372937	(013228-013999)	Element, Fltr, Fuel Lpg [Coalescent	1
	29	51305	(013228-013999)	Fitting, Draincock, .25npt 90	1
	30	311828	(013228-013999)	Fitting, Brs, Str, Pm08/Pf04	1
	31	392258	(013228-013999)	Hose, Pvc, Clr, 0.38id 0.56od 13.00l	1
	32	64740	(013228-013999)	Fitting, Plstc, Tee, Bm12/Pf08/Bm12	1
	33	1017662	(013228-013999)	Label, Instr, Filter Drain	1
	34	19317	(013228-013999)	Screw, Hex, .25-20 X 0.75, 5	2
	35	29570	(013228-013999)	Washer, Flat, 0.28b 1.00d .06, Stl	2
		130041	(013228-013999)	Tie, Wire 11-1/2x.19 Ny (not shown)	6
	36	393905	(013228-013999)	Nut	8
	37	393906	(013228-013999)	Stud	2
	38	393907	(013228-013999)	Washer	-
	39	393898	(013228-013999)	Bolt	3
	40	393908	(013228-013999)	Stud	1
	41	393909	(013228-013999)	Bolt	-
	42	393910	(013228-013999)	Manifold, Intake	1
	43	393911	(013228-013999)	Fitting	1
	44	393912	(013228-013999)	Gasket	1
	45	393913	(013228-013999)	Manifold, Exhaust	1
	46	393914	(013228-013999)	Stud	2
	47	393915	(013228-013999)	Clamp	4
	48	393916	(013228-013999)	Gasket	1

these parts are NOT included in #1;

49	371646	Kit, Adaptor
50	371647	Kit, Gasket (part of #48)
51	371658	Shield, Heat

Fig. 35 - Engine Electronic Fuel Ignition and Vaporizer Group, LPG (014000-014999)

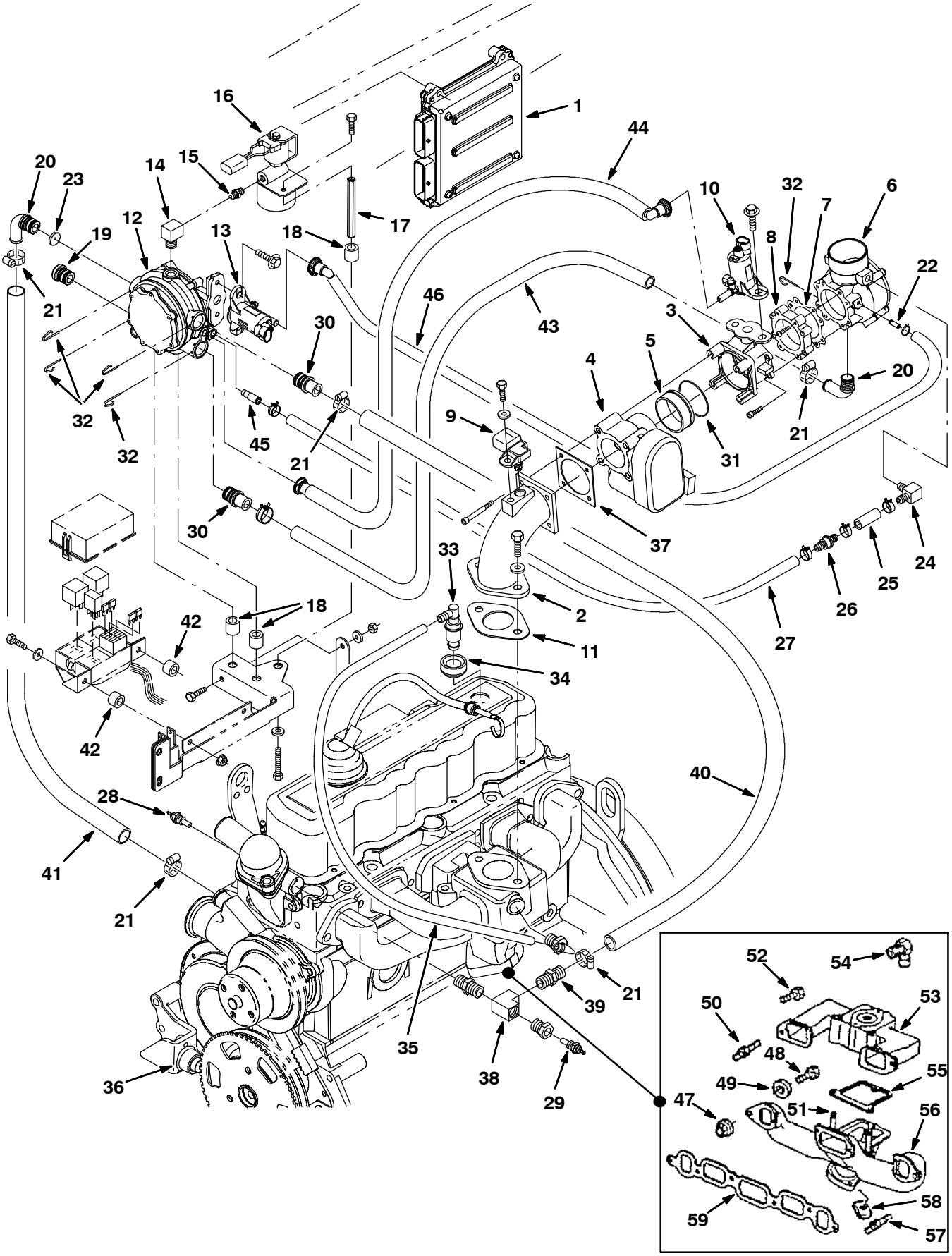

354178 - 8410, 800, LP

Fig. 35 - Engine Electronic Fuel Ignition and Vaporizer Group, LPG (014000-014999)

	Ref.	Part No.	Serial Number	Description	Qty.
	1	372859	(014000-014999)	Module, Ecu, Lpg [Gm 3.0l]	1
	2	372495	(014000-014999)	Adaptor, Intake, Lpg [3.0l]	1
	3	372496	(014000-014999)	Adaptor, Valve, Fuel Trim	1
372482	4	~~372497~~	(014000-014999)	~~Valve, Body, Throttle, Lpg~~ Housing, Throttle, 40MM (Bosch)	1
	5	372498	(014000-014999)	Sleeve, Throttle [Bosch], Plstc	1
	6	372899	(014000-014999)	Housing Assy, Throttle, Lpg [Gm 3.0l]	1
	7	372608	(014000-014999)	Gasket	1
	8	372612	(014000-014999)	Adapter, Throttle Body	1
	9	372493	(014000-014999)	Sensor, [Tmap]	1
13	~~10~~	372501	(014000-014999)	Valve, Trim, Fuel, ~~Normal Flow~~ LPG	1
	11	372490	(014000-014999)	Gasket, Carb	1
	12	372500	(014000-014999)	Converter, Lpg	1
372497 10	~~13~~	~~372581~~	(014000-014999)	Valve, Trim, Fuel, ~~Normal Flow, E90~~ LPG	1
	14	372611	(014000-014999)	Fitting, Str, E90, .25npt	1
	15	372610	(014000-014999)	Fitting, Nipple, .25npt, Brs	1
▽	16	372503	(014000-014999)	Valve, Fuelock, Lpg, W/ Wire Connector	1
▲		372615	(014000-014999)	Filter Kit, Lpg Lockoff	1
	17	372577	(014000-014999)	Spacer, Sppt, Filter Lock Off	1
	18	372518	(014000-014999)	Isolator Kit, Mtg, Vaporizer, Rbr	3
	19	372515	(014000-014999)	Fitting, Cap	1
	20	372512	(014000-014999)	Fitting, E70	2
	21	63810	(014000-014999)	Clamp, Hose, Wormdrive, 0.56-1.06d	5
	22	372511	(014000-014999)	Fitting, Hose, Vacuum, .25	1
	23	372517	(014000-014999)	Restrictor, Jet, Coolant	1
	24	372510	(014000-014999)	Fitting, E90	1
	25	372507	(014000-014999)	Hose, Balancing, Press, 45mm	1
	26	372569	(014000-014999)	Valve, Check	1
	27	372506	(014000-014999)	Hose, Balancing, Press, 680mm	1
	28	372891	(014000-014999)	Sensor, Temp, Coolant	1
	29	372472	(014000-014999)	Sensor, Temp	1
	30	372514	(014000-014999)	Fitting, Str	2
	31	372484	(014000-014999)	Seal, Org	1
	32	372523	(014000-014999)	Pin, Retainer	5
	33	372483	(014000-014999)	Valve, [Pcv]	1
	34	393984	(014000-014999)	Grommet	1
	35	372489	(014000-014999)	Hose, 9.5mm X 450mm [Pcv]	1
	36	372492	(014000-014999)	Sensor, Speed, Timing Wheel [3.0l]	1
	37	372545	(014000-014999)	Gasket, Body, Throttle [1.6l]	1
	38	372527	(014000-014999)	Fitting, Pipe, Tee, Pm06/Pf06/Pf06	1
	39	372526	(014000-014999)	Fitting, Hose, 10hose/Pm06	1
	40	372531	(014000-014999)	Hose, Mold, .62 X 37.0	1
	41	372528	(014000-014999)	Hose, Mold, .62 To .75	1
	42	372470	(014000-014999)	Isolator, Box, Relay	2
	43	372508	(014000-014999)	Hose, Fuel, 165mm	1
	44	372504	(014000-014999)	Hose, Valve, Fuel Trim, 325mm	1
	45	372516	(014000-014999)	Fitting, Brs, Adapter	1
	46	372505	(014000-014999)	Hose, Valve, Press Trim, 405mm	1
	47	393905	(014000-014999)	Nut	8
	48	393906	(014000-014999)	Stud	2
	49	393907	(014000-014999)	Washer	-
	50	393898	(014000-014999)	Bolt	3

354178 - 8410, 800, LP

Fig. 35 - Engine Electronic Fuel Ignition and Vaporizer Group, LPG (014000-014999)

Ref.	Part No.	Serial Number	Description	Qty.
51	393908	(014000-014999)	Stud	1
52	393909	(014000-014999)	Bolt	-
53	393910	(014000-014999)	Manifold, Intake	1
54	393911	(014000-014999)	Fitting	1
55	393912	(014000-014999)	Gasket	1
56	393913	(014000-014999)	Manifold, Exhaust	1
57	393914	(014000-014999)	Stud	2
58	393915	(014000-014999)	Clamp	4
59	393916	(014000-014999)	Gasket	1

Fig. 36 - Engine Electronic Fuel Ignition and Vaporizer Group, LPG (015000-)

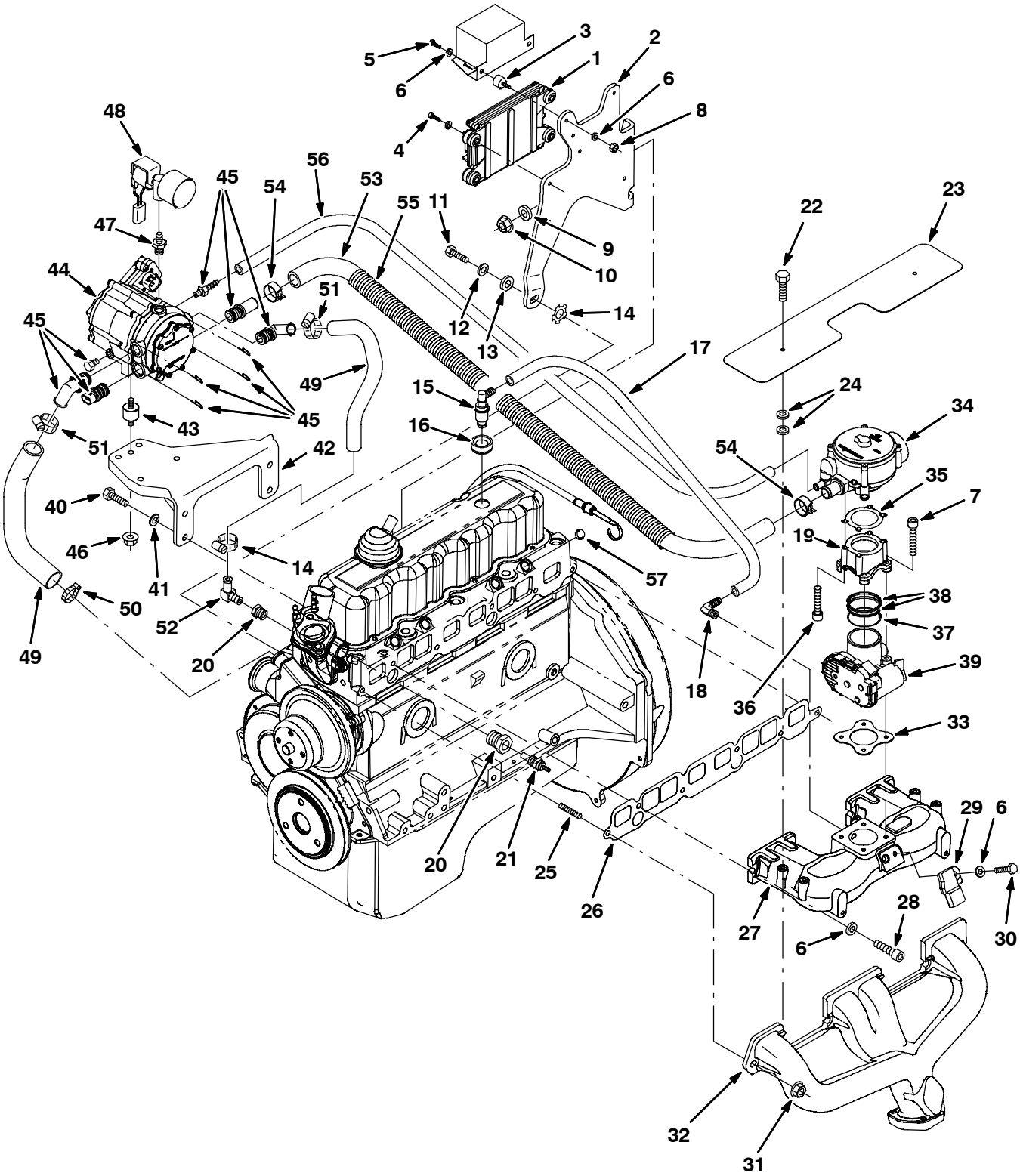

354175 - 8410, 800, LP

Fig. 36 - Engine Electronic Fuel Ignition and Vaporizer Group, LPG (015000-)

Ref.	Part No.	Serial Number	Description	Qty.
1	1032805	(015000-)	Module, Ecu, Lpg [Gm3.0l 2007]	1
2	385008	(015000-)	Bracket, Box, Relay	1
3	372470	(015000-)	Vr, Isolator, Box, Relay	1
4	25047	(015000-)	Screw, Hex, .25-20 X 1.25, G5	4
5	19315	(015000-)	Screw, Hex, .25-20 X 0.50, G5	2
6	32490	(015000-)	Washer, Flat, 0.25, Std	13
7	385016	(015000-)	Screw, Soc, M6 X 1.00 X 70	4
8	19312	(015000-)	Nut, Hex, Std, .25-20	2
9	371877	(015000-)	Vr, Washer, Flat, 0.38, Hardened	1
10	27980	(015000-)	Nut, Hex, Flng, .38-16	1
11	371553	(015000-)	Screw, .38-16 X 1.00	1
12	371877	(015000-)	Washer, Flat, 0.38, Hardened	1
13	371509	(015000-)	Washer, Lock, 0.38	1
14	371875	(015000-)	Washer, Lock, Int / Ext, 0.38	1
15	372483	(015000-)	Valve [Pcv]	1
16	393984	(015000-)	Grommet	1
17	385001	(015000-)	Hose, Fuel, .38d, Rbr	1
18	385002	(015000-)	Fitting, E90	1
19	384996	(015000-)	Adapter, Valve, 400mm [Bosch]	1
20	385000	(015000-)	Fitting, Bshg	2
21	372472	(015000-)	Sensor, Temp	1
22	385007	(015000-)	Screw, M6 X 10mm	2
23	385006	(015000-)	Shield, Heat, Manifold	1
24	371877	(015000-)	Washer, Flat, 0.38, Hardened	4
25	372466	(015000-)	Stud, .38-16 X 1.2l	2
26	385003	(015000-)	Gasket, Manifold, Intake	1
27	385004	(015000-)	Manifold, Intake [2007]	1
28	10830	(015000-)	Screw, Soc, .38-16 X 1.00, Al	4
29	384985	(015000-)	Sensor [T Map]	1
30	19317	(015000-)	Screw, Hex, .25-20 X 0.75, G5	1
31	27980	(015000-)	Nut, Hex, Flng, .38-16	1
32	385005	(015000-)	Manifold, Exhaust [2007]	1
33	372545	(015000-)	Gasket, Body, Throttle [1.6l]	1
34	385012	(015000-)	Valve, Lpg [Mixer]	1
35	1037313	(015000-)	Gasket, Lpg, Adapter [Gm 2007]	1
36	385017	(015000-)	Screw, Soc, #12-24 X 1.50	1
37	1037311	(015000-)	Seal,Org, Lpg, Mixer [Gm 2007]	1
38	1037312	(015000-)	Gasket, Lpg, Mixer [Gm 2007]	2
39	384974	(015000-)	Housing, Throttle, 40mm [Bosch]	1
40	371553	(015000-)	Screw, .38-16 X 1.00	4
41	371509	(015000-)	Washer, Lock, 0.38	4
42	385014	(015000-)	Bracket [Epr]	2
43	384986	(015000-)	Isolator [Epr]	3
44	384977	(015000-)	Regulator [Ep]	1
45	384978	(015000-)	Fitting Kit [Epr]	1
46	385015	(015000-)	Nut, Flng, M8	3
47	372529	(015000-)	Fitting, Nipple, .25mal	1
48	384975	(015000-)	Valve, Lock Off	1
49	372528	(015000-)	Hose, Mold, .62 To .75	2
50	63810	(015000-)	Clamp, Hose, Wormdrive, 0.56-1.06d, .56w	1

354175 - 8410, 800, LP

Fig. 36 - Engine Electronic Fuel Ignition and Vaporizer Group, LPG (015000-)

Ref.	Part No.	Serial Number	Description	Qty.
51	372539	(015000–)	Clamp, Hose, 1.0	3
52	385011	(015000–)	Fitting, E90	1
53	385013	(015000–)	Hose, Mold [Epr To Mixer]	1
54	384979	(015000–)	Clamp, Hose, Spring, 0.62d	2
55	384971	(015000–)	Cover, Hose	1
56	384973	(015000–)	Hose, Supply, Gas, .25id	1
57	372579	(015000–)	Plug, Hole, Injector	4

Fig. 37 - Engine Air Cleaner Group (000000-013227)

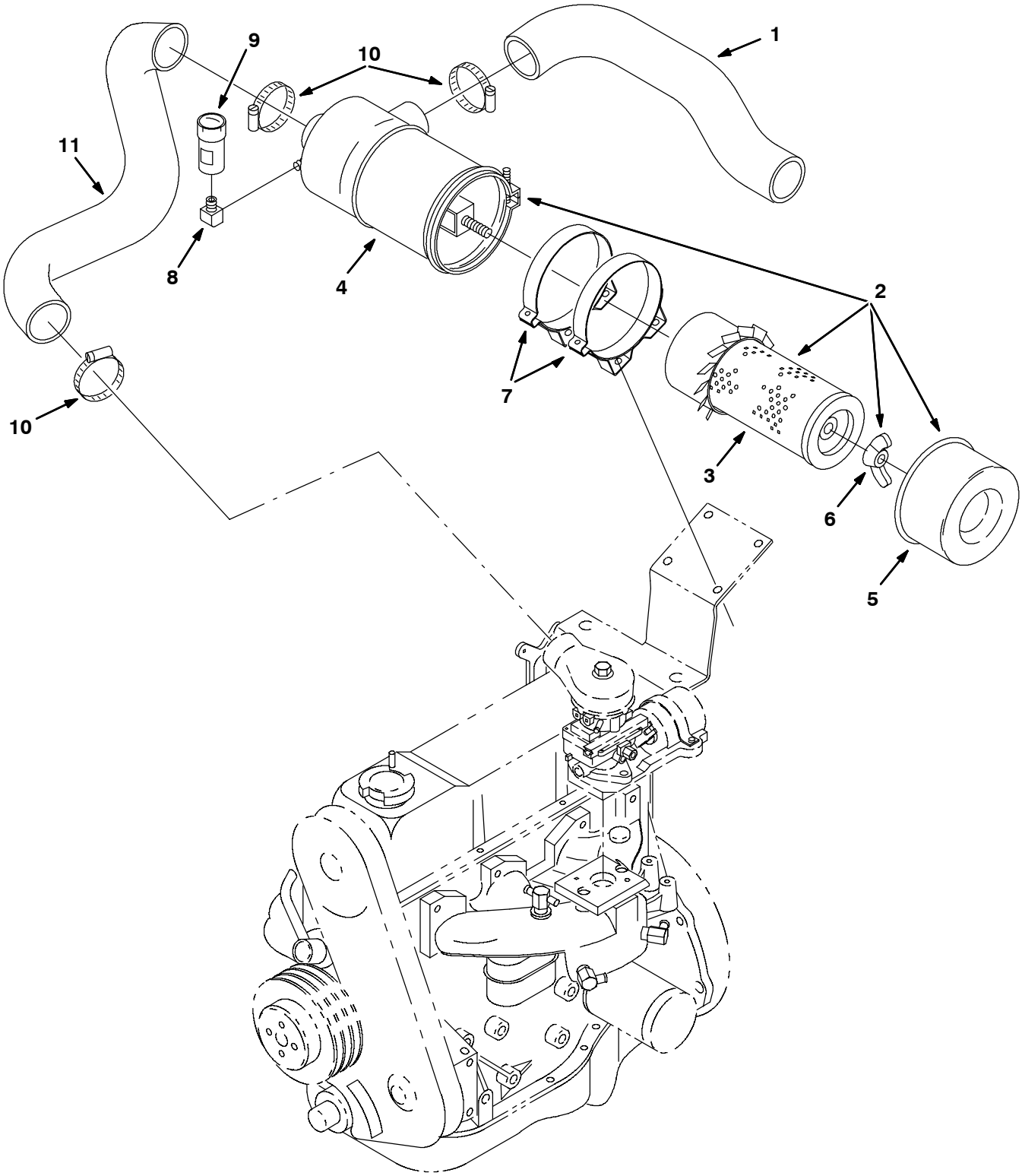

11024 - 8410, G, LP

Fig. 37 - Engine Air Cleaner Group (000000-013227)

	Ref.	Part No.	Serial Number	Description	Qty.
	1	78845	(000000-013227)	Hose, Air Intake, Molded	1
▽	2	58538	(000000-013227)	Air Cleaner	1
▲	3	58120	(000000-013227)	Filter Element, Air	1
▲	4	02740	(000000-013227)	Clamp Assy	1
▲	5	02741	(000000-013227)	Cup Assy	1
▲	6	07562	(000000-013227)	Nut,Wing .44-20 Special	1
	7	51560-3	(000000-013227)	Clamp,Mounting,Cyclopac Aircl.	2
	8	11984	(000000-013227)	Ftg, El90 Npt/02Pf-02Pm	1
	9	03026	(000000-013227)	Indicator Service Air Filter	1
	10	14432	(000000-013227)	Clamp-Wormdrive, 1.81- 2.75D	3
	11	84087	(000000-013227)	Hose, Air Intake, Molded, Gas	1

Fig. 38 - Engine Air Cleaner Group (013228-013999)

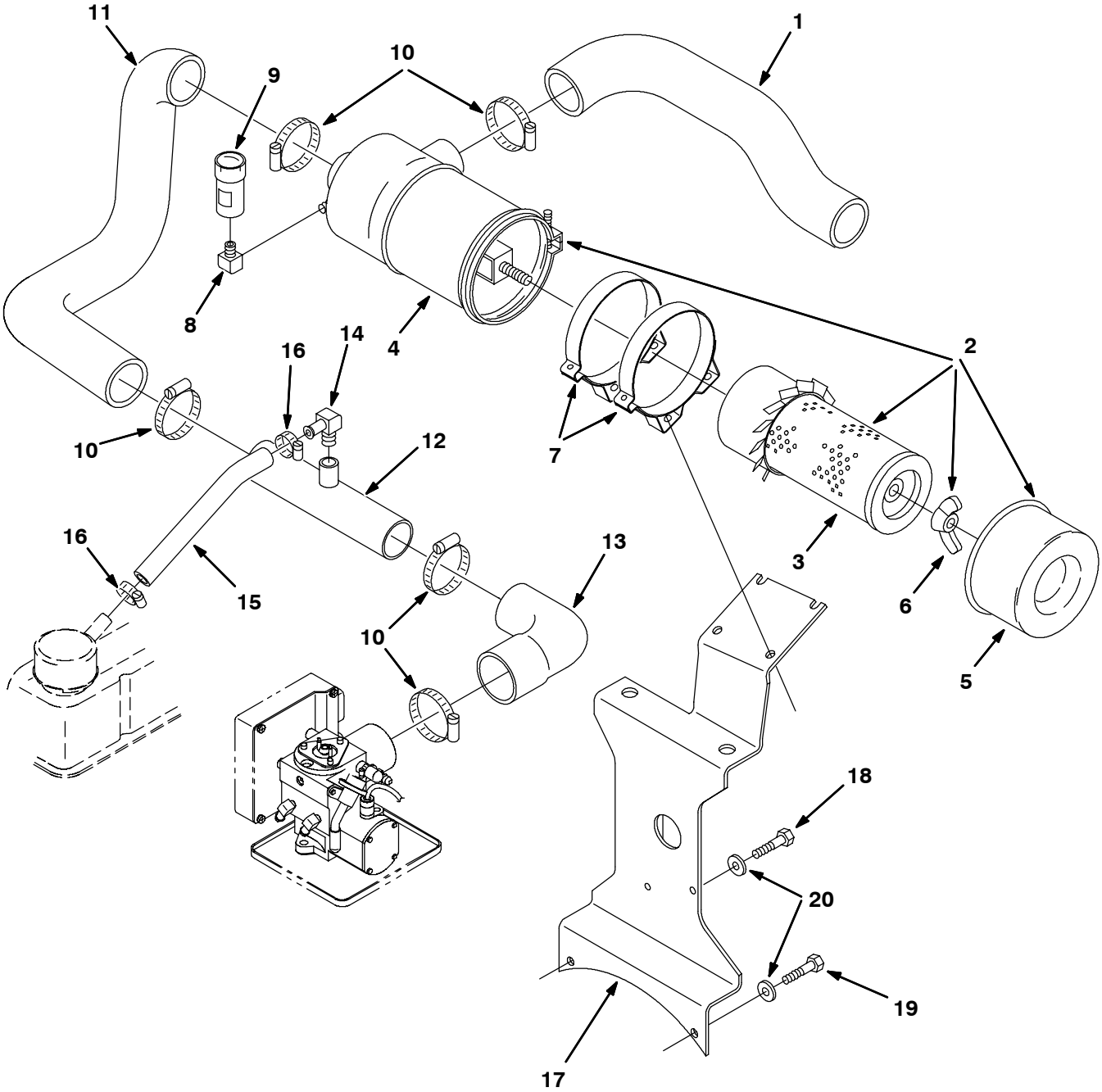

353846 - 8410, G, LP

Fig. 38 - Engine Air Cleaner Group (013228-013999)

	Ref.	Part No.	Serial Number	Description	Qty.
	1	78845	(013228-013999)	Hose, Air Intake, Molded	1
▽	2	58538	(013228-013999)	Air Cleaner	1
▲	3	58120	(013228-013999)	Filter Element, Air	1
▲	4	02740	(013228-013999)	Clamp Assy	1
▲	5	02741	(013228-013999)	Cup Assy	1
▲	6	07562	(013228-013999)	Nut,Wing .44-20 Special	1
	7	51560-3	(013228-013999)	Clamp,Mounting,Cyclopac Aircl.	2
	8	11984	(013228-013999)	Ftg, El90 Npt/02Pf-02Pm	1
	9	03026	(013228-013999)	Indicator Service Air Filter	1
	10	14432	(013228-013999)	Clamp-Wormdrive, 1.81- 2.75D	5
	11	392639	(013228-013999)	Hose, Air, Rework, G/Lp [Gm 3.0], Mold	1
	12	392648	(013228-013999)	Tube Wldt, Intake, 2.0d .38npt	1
	13	392641	(013228-013999)	Hose, Air, G/Lp [Gm 3.0], Mold	1
	14	51839	(013228-013999)	Fitting, Brs, E90, Em10/Pm06	1
	15	72978	(013228-013999)	Hose, Heater, 0.62id 13.0l	1
	16	63810	(013228-013999)	Clamp, Hose, Wormdrive, 0.56-1.06d	2
	17	392577	(013228-013999)	Bracket Wldt, Mtg, Fltr, Air, [Gm3.0]	1
	18	21198	(013228-013999)	Screw, Hex, .38-16 X 1.25, 5	1
	19	27989	(013228-013999)	Screw, Hex, .38-16 X 1.75, 5	1
	20	32492	(013228-013999)	Washer, Flat, .38 Std	2

Fig. 39 - Engine Air Cleaner Group (014000-014999)

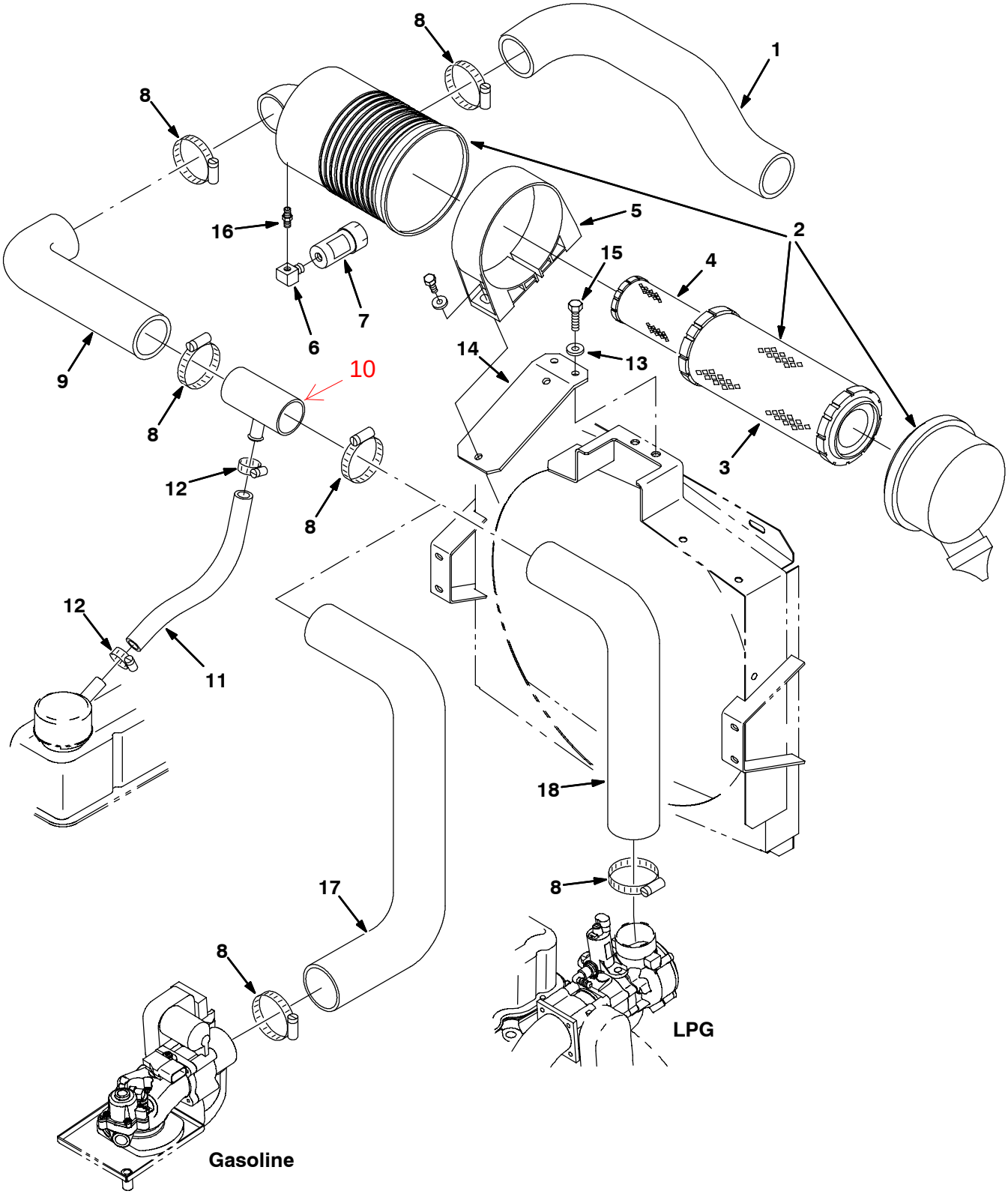

353846 - 8410, G, LP

Fig. 39 - Engine Air Cleaner Group (014000-014999)

	Ref.	Part No.	Serial Number	Description	Qty.
	1	1012317	(014000-014999)	Hose, Intake, Mold, 2.00id 2.00id [Epdm]	1
▽	2	369745	(014000-014999)	Filter, Assy, Air	1
▲	3	369746	(014000-014999)	Element, Fltr, Air, [Dn#P831424]	1
	4	398279	(014000-014999)	Element, Fltr, Air, [Dn#P822858] Safety	1
	5	369747	(014000-014999)	Clamp, Mtg, Filter, Air	1
	6	11984	(014000-014999)	Fitting, Pipe, E90, Pm02/Pf02	1
	7	03026	(014000-014999)	Indicator, Filter, Air	1
	8	14432	(014000-014999)	Clamp, Hose, Wormdrive, 1.81-2.75d	5
	9	1012204	(014000-014999)	Hose, Intake, Mold, E90 2.00id 2.00id	1
	10	1011780	(014000-014999)	Tube Wldt, Tee	1
	11	13124	(014000-014999)	Hose, Heater, 0.62id 18.0l	1
	12	1011899	(014000-014999)	Clamp, Hose, Spring Stl, 0.86d X 0.38w	2
	13	32492	(014000-014999)	Washer, Flat, 0.38 Std	4
	14	1013677	(014000-014999)	Plate, Mtg, Air-Clnr	1
	15	39277	(014000-014999)	Screw, Hex, M8 X 1.25 X 25, 8.8	2
	16	51560-5	(014000-014999)	Fitting, Brs, Str, Pm02, Service	1
	17	1014206	(014000-014999)	Hose, Intake, Mold, 2.00id 2.00id	1
	18	1012206	(014000-014999)	Hose, Intake, Mold, E90 2.00id 2.00id	1

Fig. 40 - Engine Air Cleaner Group (015000-)

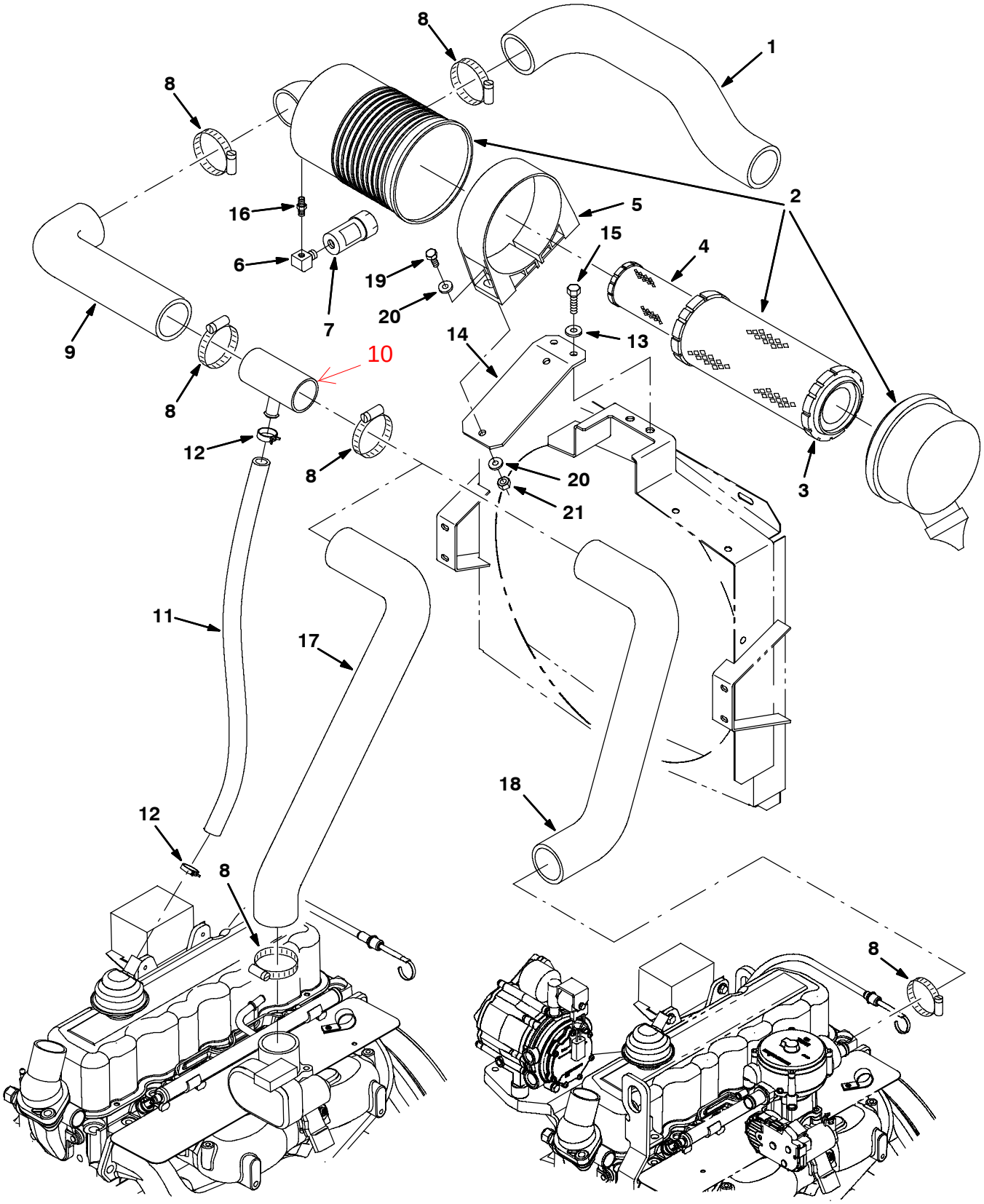

353846 - 8410, G, LP

Fig. 40 - Engine Air Cleaner Group (015000-)

	Ref.	Part No.	Serial Number	Description	Qty.
	1	1012317	(015000-)	Hose, Intake, Mold, 2.00id 2.00id [Epdm]	1
▽	2	369745	(015000-)	Filter, Assy, Air	1
▲	3	369746	(015000-)	Element, Fltr, Air, [Dn#P831424]	1
	4	398279	(015000-)	Element, Fltr, Air, [Dn#P822858] Safety	1
	5	369747	(015000-)	Clamp, Mtg, Filter, Air	1
	6	11984	(015000-)	Fitting, Pipe, E90, Pm02/Pf02	1
	7	03026	(015000-)	Indicator, Filter, Air	1
	8	14432	(015000-)	Clamp, Hose, Wormdrive, 1.81-2.75d	5
	9	1012204	(015000-)	Hose, Intake, Mold, E90 2.00id 2.00id	1
	10	1011780	(015000-)	Tube Wldt, Tee	1
	11	13124	(015000-)	Hose, Heater, 0.62id 18.0l	1
	12	1011899	(015000-)	Clamp, Hose, Spring Stl, 0.86d X 0.38w	2
	13	32492	(015000-)	Washer, Flat, 0.38 Std	4
	14	1013677	(015000-)	Plate, Mtg, Air-Clnr	1
	15	39277	(015000-)	Screw, Hex, M8 X 1.25 X 25, 8.8	2
	16	51560-5	(015000-)	Fitting, Brs, Str, Pm02, Service	1
	17	1029257	(015000-)	Hose, Intake, Gas, 2.00id [Epdm 8410]	1
	18	1032254	(015000-)	Hose, Intake, Lpg, 2.00id [Epdm 8410]	1
	19	76570	(015000-)	Screw, Hex, M8 X 1.25 X 30, 8.8	2
	20	32491	(015000-)	Washer, Flat, 0.31, Std	4
	21	08709	(015000-)	Nut, Hex, Lock, M8 X 1.25, Nl	2

Fig. 41 - Engine Muffler Group (000000-013227)

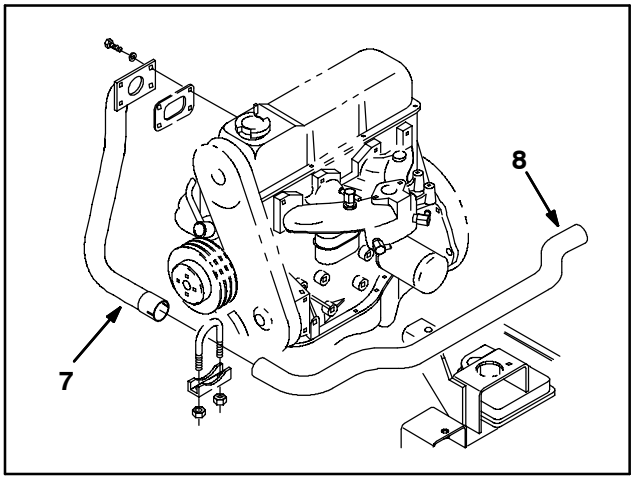

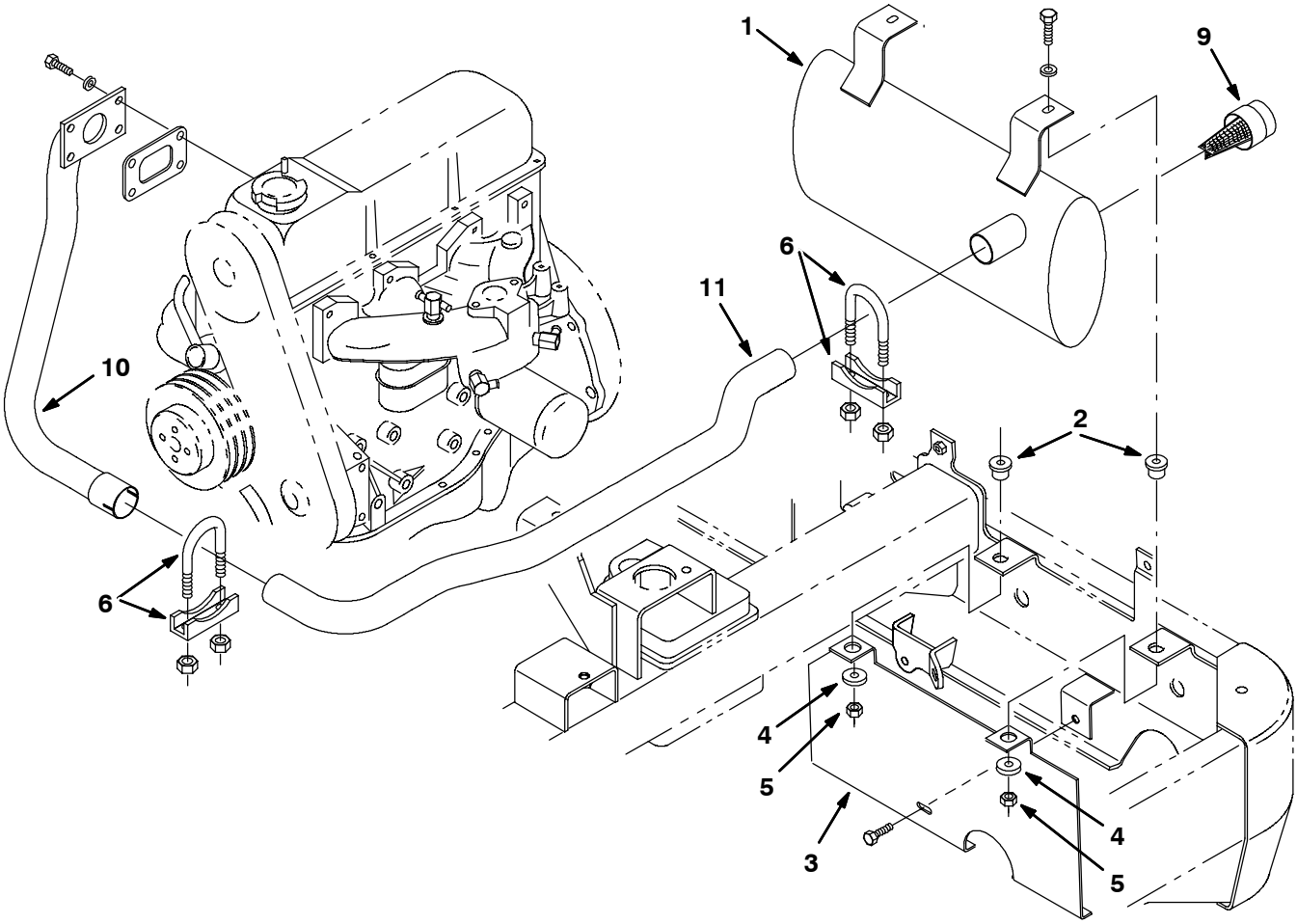

11028 - 8410, G, LP, NA

Fig. 41 - Engine Muffler Group (000000-013227)

Ref.	Part No.	Serial Number	Description	Qty.
1	374599	(000000-013227)	Muffler, Exhaust	1
2	54274	(000000-013227)	Isolator-Vibration,125Lb.Ratng	2
3	83563	(000000-013227)	Plate, Shield, Muffler	1
4	13248	(000000-013227)	Washer .400B 1.12D .12Cr Znc	2
5	41430	(000000-013227)	Nut-Hxlocnyln M10X1.5	2
6	24012	(000000-013227)	Clamp-Muffler,For 1.62 Od Tube	2
7	73028	(000000-012503)	Pipe, Exhaust, Ford 2.3	1
8	77287	(000000-012503)	Pipe, Exhaust, Gas/Lpg	1
9	70832	(000000-013227)	Screen, Muffler	1
10	385419	(012504–013227)	Pipe, Exhaust	1
11	385420	(012504–013227)	Tube, Exhaust	1

Fig. 42 - Engine Muffler Group (013228-013999)

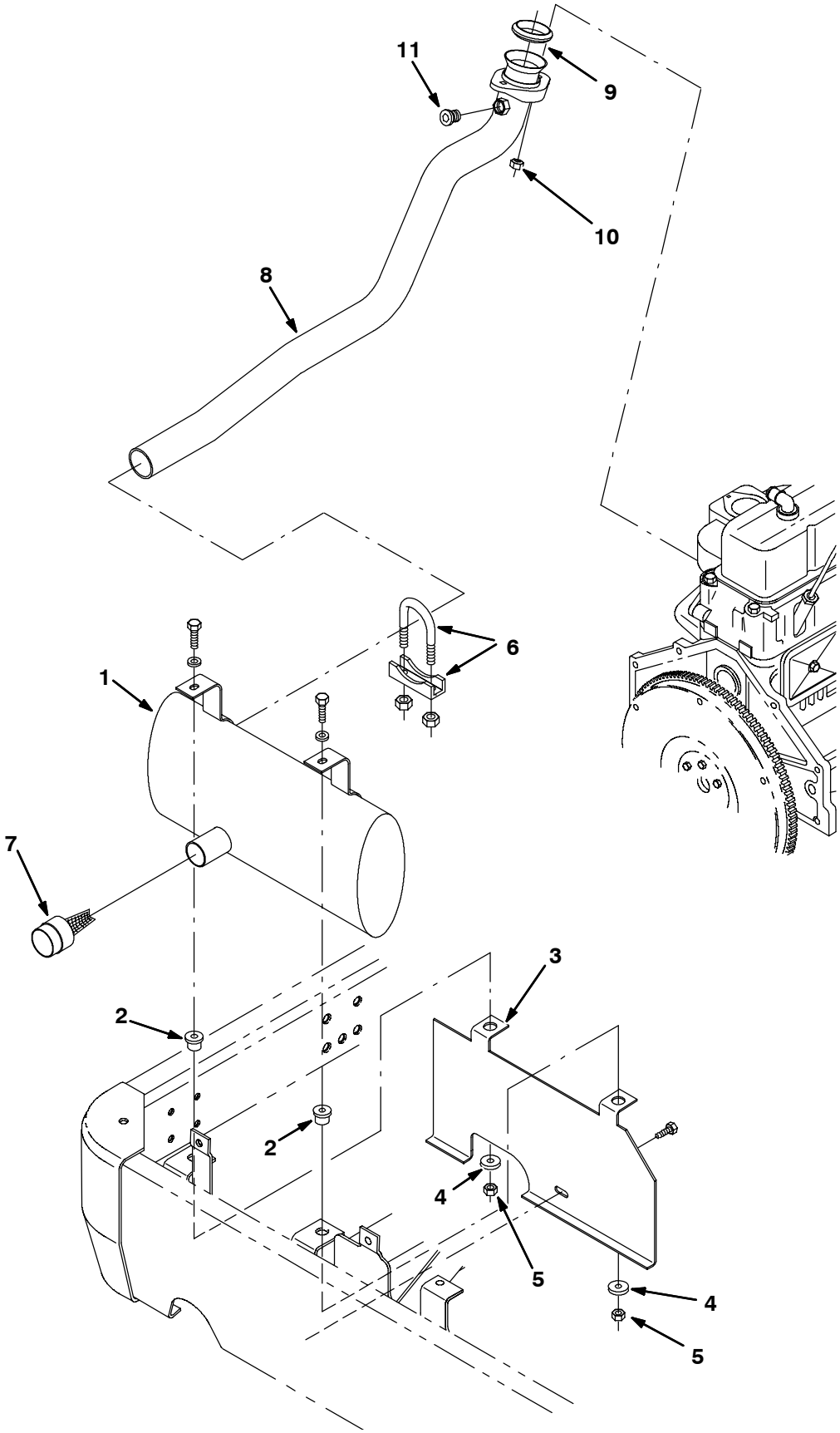

353847 - 8410, G, LP, NA

Fig. 42 - Engine Muffler Group (013228-013999)

Ref.	Part No.	Serial Number	Description	Qty.
1	374599	(013228-013999)	Muffler, Exhaust	1
2	54274	(013228-013999)	Isolator-Vibration,125Lb.Ratng	2
3	83563	(013228-013999)	Plate, Shield, Muffler	1
4	13248	(013228-013999)	Washer .400B 1.12D .12Cr Znc	2
5	41430	(013228-013999)	Nut-Hxlocnyln M10X1.5	2
6	24012	(013228-013999)	Clamp-Muffler,For 1.62 Od Tube	2
7	70832	(013228-013999)	Screen, Muffler	1
8	392585	(013228-013999)	Tube, Exhaust, 2.0d [Gm3.0] [8410]	1
9	371573	(013228-013999)	Gasket	1
10	25014	(013228-013999)	Nut, Hex, Std, .38-16	1
11	393264	(013228-013999)	Fitting, Hyd, Plug, M18x1.5 Metric	1

Fig. 43 - Engine Muffler Group (014000-014999)

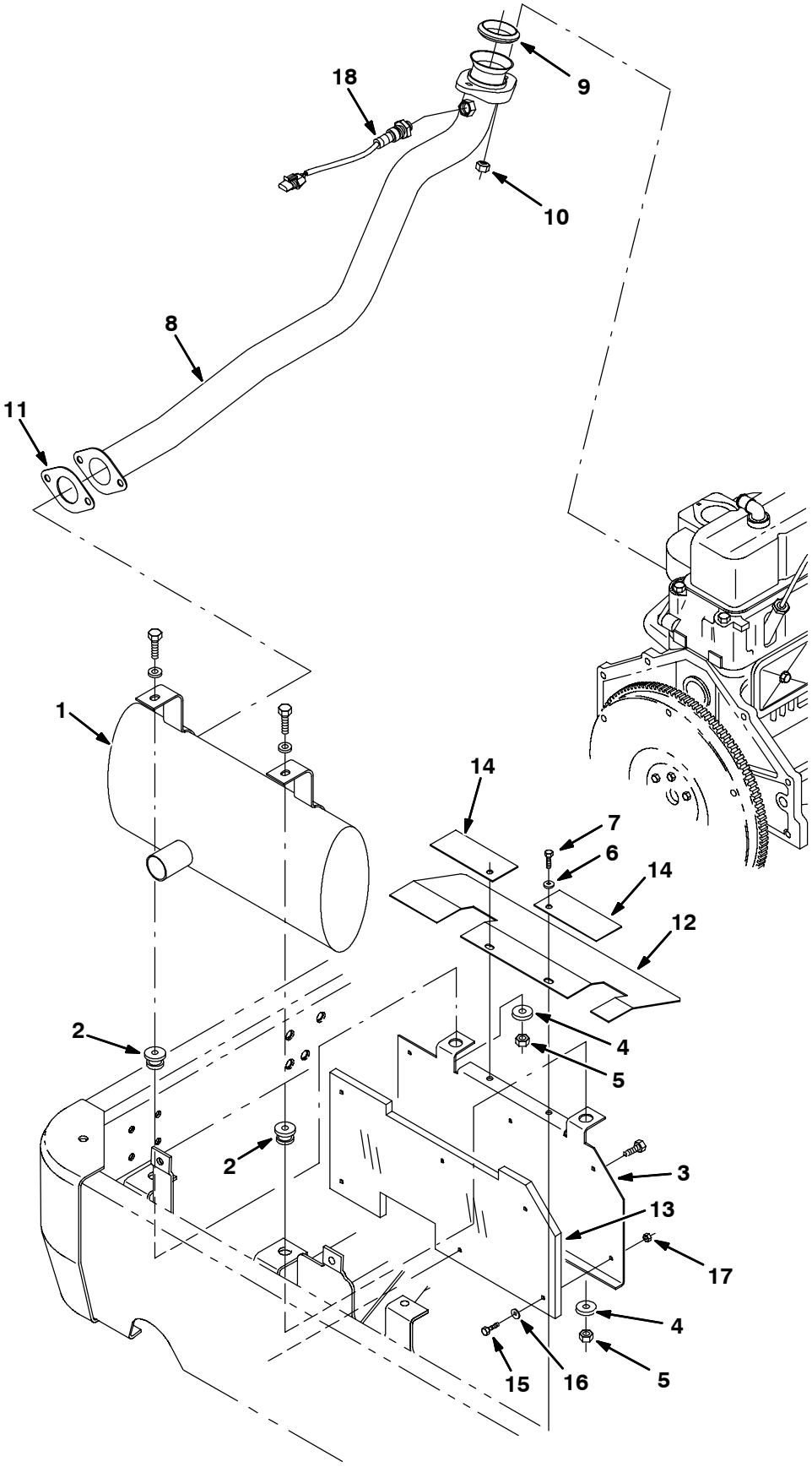

353847 - 8410, G, LP, NA

Fig. 43 - Engine Muffler Group (014000-014999)

Ref.	Part No.	Serial Number	Description	Qty.
1	1011400	(014000-014999)	Muffler, Catalytic, [Gm3.0l 8410]	1
2	1013590	(014000-014999)	Isolator, Vib, Bshg, 1.1d 0.6l .4b 0.78h	2
3	1013399	(014000-014999)	Panel, Shield, Heat, Muffler	1
4	13248	(014000-014999)	Washer, Flat, 0.40b 1.12d .12, Stl, Pl	2
5	41430	(014000-014999)	Nut, Hex, Lock, M10 X 1.5, Nl	2
6	32483	(014000-014999)	Washer, Flat, 0.25 Sae	2
7	06943	(014000-014999)	Screw, Hex, M6 X 1.0 X 20, 8.8	2
8	1011939	(014000-014999)	Tube, Exhaust, 2.0d [Gm3.0l 8410]	1
9	371573	(014000-014999)	Gasket	1
10	25014	(014000-014999)	Nut, Hex, Std, .38-16	1
11	1011216	(014000-014999)	Gasket, Exhaust, 2 Hole, 3.4bc	1
12	1013465	(014000-014999)	Shield, Heat	1
13	1017847	(014000-014999)	Insulation, 0.5, Ntch [Durablanket]	1
14	1014143	(014000-014999)	Retainer, Shield	2
15	06943	(014000-014999)	Screw, Hex, M6 X 1.0 X 20, 8.8	6
16	41178	(014000-014999)	Washer, Flat, 0.25 Fender	6
17	08164	(014000-014999)	Nut, Hex, Stover, M6 X 1.0	6
18	372491	(014000-014999)	Sensor, Oxygen	1

Fig. 44 - Engine Muffler Group (015000-)

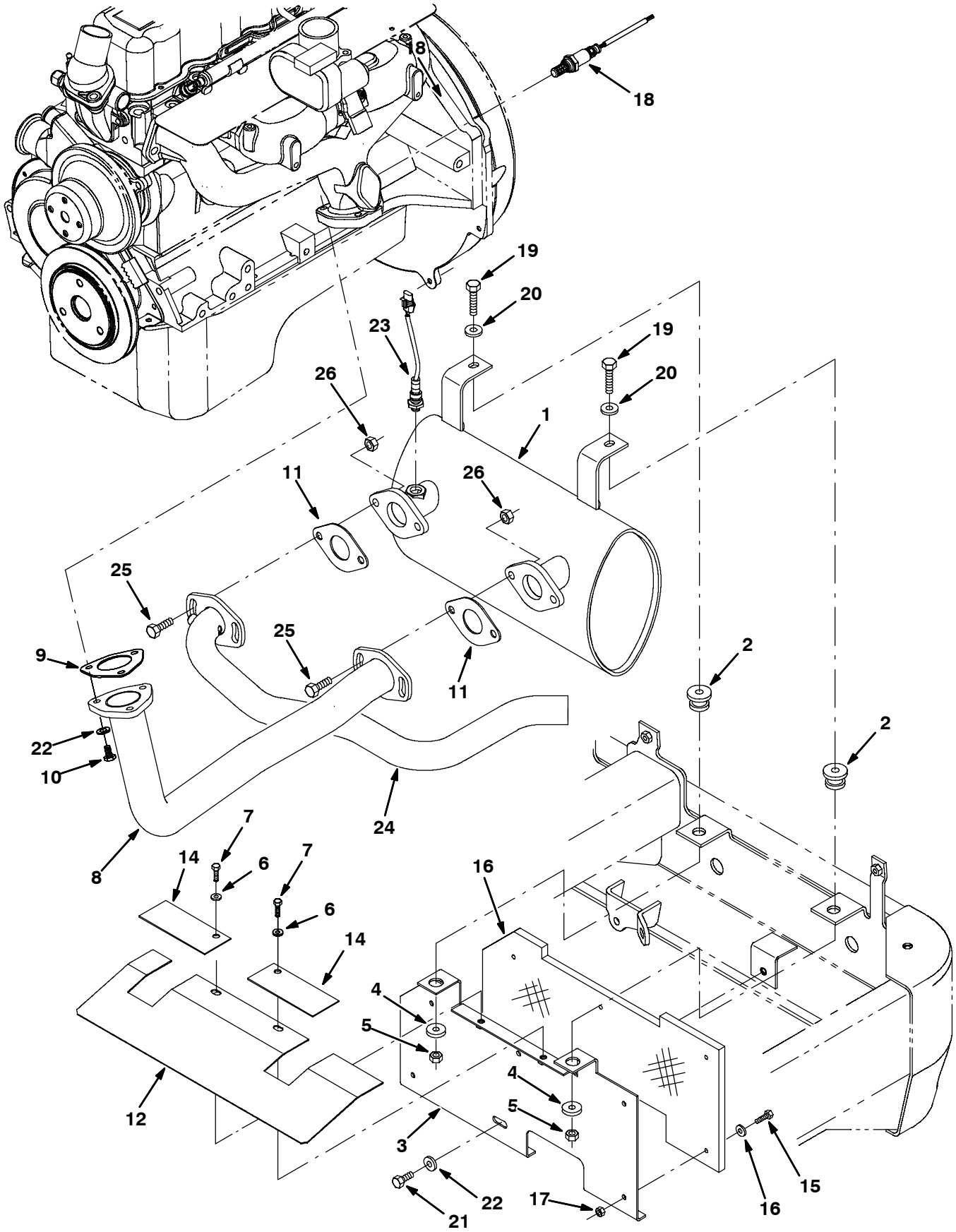

353847 – 8410, G, LP, NA

Fig. 44 - Engine Muffler Group (015000-)

Ref.	Part No.	Serial Number	Description	Qty.
1	1028419	(015000–)	Muffler, Catalytic [Gm3.0l, 8410 2007]	1
2	1013590	(015000–)	Isolator, Vib, Bshg, 1.1d 0.6l .4b 0.78h	2
3	1013399	(015000–)	Panel, Shield, Heat, Muffler	1
4	13248	(015000–)	Washer, Flat, 0.40b 1.12d .12, Stl, Pl	2
5	08166	(015000–)	Nut, Hex, M10 X 1.50 [Stover]	2
6	32483	(015000–)	Washer, Flat, 0.25 Sae	2
7	06943	(015000–)	Screw, Hex, M6 X 1.0 X 20, 8.8	2
8	1032292	(015000–)	Tube Wldt, Exhaust, 2.0d[Gm3.0l 8410 07]	1
9	1033739	(015000–)	Gasket, Flng, Exhaust	1
10	76570	(015000–)	Screw, Hex, M8 X 1.25 X 30, 8.8	3
11	1011216	(015000–)	Gasket, Exhaust, 2hole, 3.4bc	2
12	1028925	(015000–)	Shield, Heat	1
13	1017847	(015000–)	Insulation, 0.5, Ntch [Durablanket]	1
14	1014143	(015000–)	Retainer, Shield	2
15	06942	(015000–)	Screw, Hex, M6 X 1.0 X 16, 8.8	5
16	41178	(015000–)	Washer, Flat, 0.25 Fender	6
17	08164	(015000–)	Nut, Hex, Stover, M6 X 1.0	6
18	1028559	(015000–)	Sensor, Oxygen [Gm 1.6l/3.0l 2007]	1
19	39285	(015000–)	Screw, Hex, M10 X 1.5 X 40, 8.8	2
20	32492	(015000–)	Washer, Flat, 0.38, Std	2
21	16931	(015000–)	Screw, Hex, M8 X 1.25 X 20, 8.8	1
22	32491	(015000–)	Washer, Flat, 0.31, Std	4
23	1028558	(015000–)	Sensor, Exhaust, Tailpipe	1
24	1028455	(015000–)	Tube, Exhaust, Tailpipe [Gm3.0l 8410]	1
25	39284	(015000–)	Screw, Hex, M10 X 1.5 X 35, 8.8	4
26	08166	(015000–)	Nut, Hex, M10 X 1.50 [Stover]	4

Fig. 45 - Engine Fuel Tank Group, Gasoline (000000-013227)

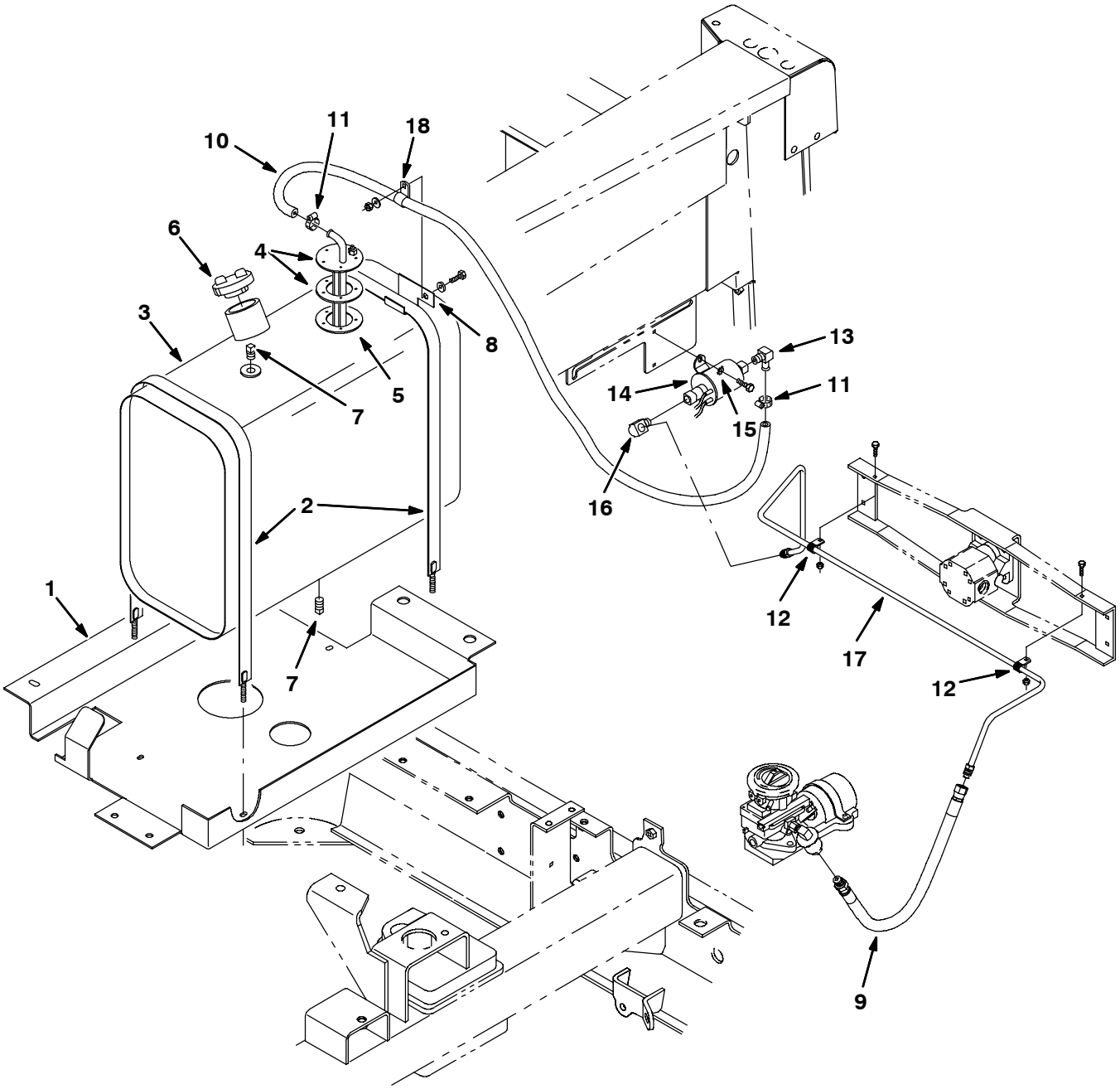

11030 - 8410, G, NA

Fig. 45 - Engine Fuel Tank Group, Gasoline (000000-013227)

	Ref.	Part No.	Serial Number	Description	Qty.
	1	83841	(000000-013227)	Tray, Fuel	1
	2	87396	(000000-013227)	Strap Weldmt, Gas Tank	2
▽	3	84101	(000000-013227)	Tank, Fuel W/Label	1
▲▽	4	78937	(000000-013227)	Sending Unit	1
▲▲	5	14131	(000000-013227)	Gasket, 2.7D 1.5B.12T 5/ 2.1Bc	1
▲	6	48267	(000000-013227)	Cap, Fuel	1
▲	7	48126	(000000-013227)	Ftg-Plug Npt 02Pm Sq Hd	2
	8	70767	(000000-013227)	Tab,Fuelline	1
	9	70173	(000000-013227)	Hose, Fuelline, 10.0L	1
	10	84054	(000000-013227)	Hose-Fuel, .31Id 23.0L	1
	11	43844	(000000-013227)	Clamp-Wormdrive, 0.25- 0.62D	2
	12	26395-2	(000000-013227)	Clamp-Cable, 0.38Dia 0.38Wth	2
	13	53029	(000000-013227)	Ftg-Brs E90 Bm05/Pm02	1
	14	59015	(000000-013227)	Pump, Fuel	1
	15	41140	(000000-013227)	Washer-Loc Int-Ext .25 Pltd	1
	16	15555-1	(000000-013227)	Ftg-Brs E90 If05/Pm02	1
	17	84055	(000000-013227)	Fuelline, .312 Od	1
	18	76736	(000000-013227)	Clamp-Cable, 0.38Dia 0.62Wth	1

Fig. 46 - Engine Fuel Tank Group, Gasoline (013228-013999)

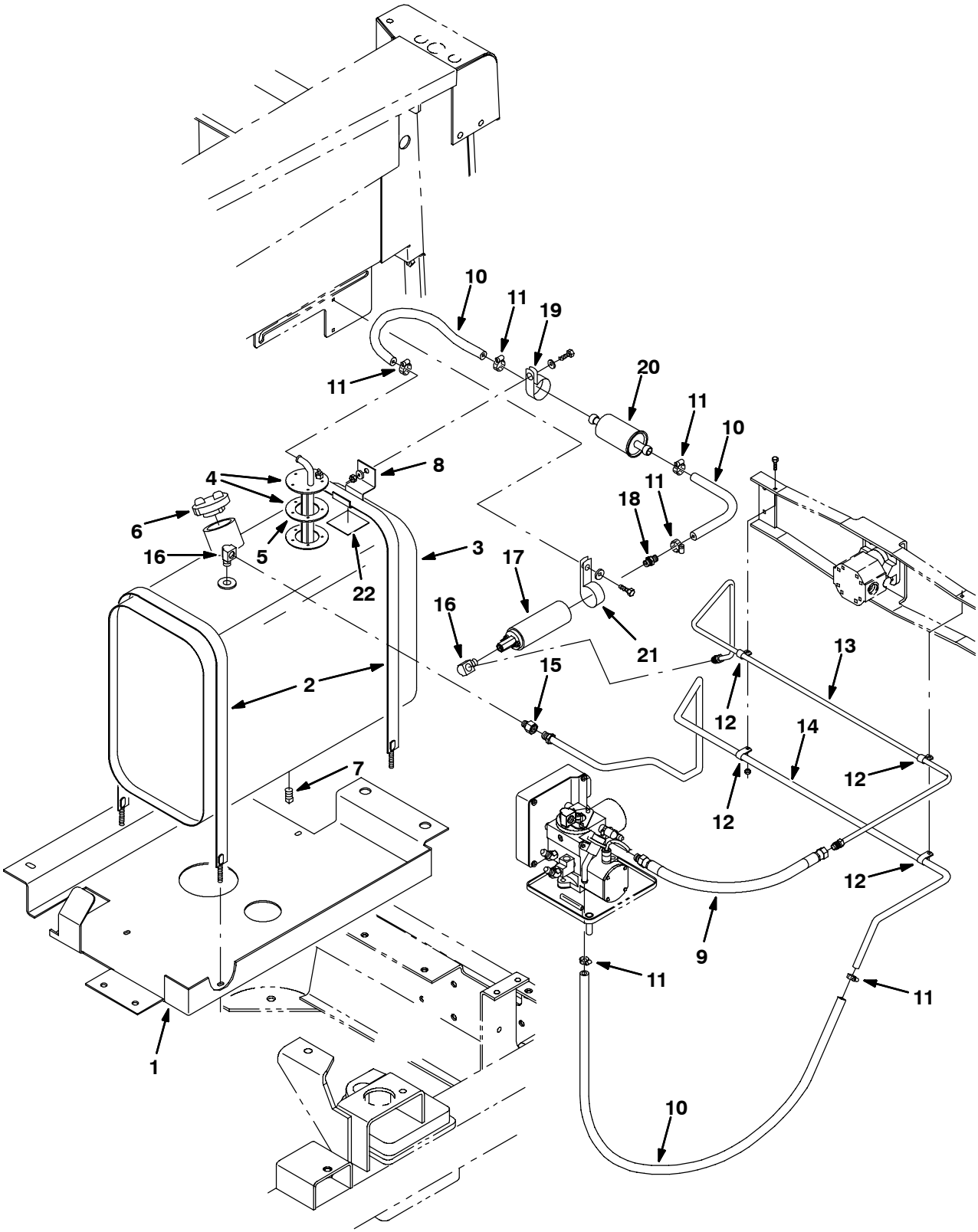

353848 - 8410, G, NA

Fig. 46 - Engine Fuel Tank Group, Gasoline (013228-013999)

	Ref.	Part No.	Serial Number	Description	Qty.
	1	83841	(013228-013999)	Tray, Fuel	1
	2	87396	(013228-013999)	Strap Weldmt, Gas Tank	2
▽	3	84101	(013228-013999)	Tank, Fuel W/Label	1
▲▽	4	78937	(013228-013999)	Sending Unit	1
▲▲	5	14131	(013228-013999)	Gasket, 2.7D 1.5B.12T 5/ 2.1Bc	1
▲	6	48267	(013228-013999)	Cap, Fuel	1
▲	7	48126	(013228-013999)	Ftg-Plug Npt 02Pm Sq Hd	2
	8	392636	(013228-013999)	Bracket, Filter, Fuel	1
	9	70173	(013228-013999)	Hose, Fuelline, 10.0L	1
	10	84054	(013228-013999)	Hose-Fuel, .31Id 23.0L	2
	11	43844	(013228-013999)	Clamp-Wormdrive, 0.25- 0.62D	2
	12	26395-2	(013228-013999)	Clamp-Cable, 0.38Dia 0.38Wth	2
	13	392581	(013228-013999)	Fuelline, .31d 05if/05if Stl	1
	14	392582	(013228-013999)	Fuelline, .31d Bea/Bea Stl	1
	15	40585	(013228-013999)	Fitting, Brs, Str, If05/Pm02	1
	16	15555-1	(013228-013999)	Ftg-Brs E90 If05/Pm02	2
	17	371661	(013228-013999)	Pump, Fuel, Gas	1
	18	82544	(013228-013999)	Fitting, Brs, Str, Bm05/Pm02	1
	19	41016	(013228-013999)	Clamp, Cable, Stl, 2.25d X 1.00w, 1h	1
	20	371662	(013228-013999)	Filter, Fuel	1
	21	86328	(013228-013999)	Clamp, Cable, Stl, 1.50d X 0.75w, 1h	1
	22	36661	(013228-013999)	Strip, Rbr, 0.06 01.00w 04.0l	1

Fig. 47 - Engine Fuel Tank Group, Gasoline (014000-014999)

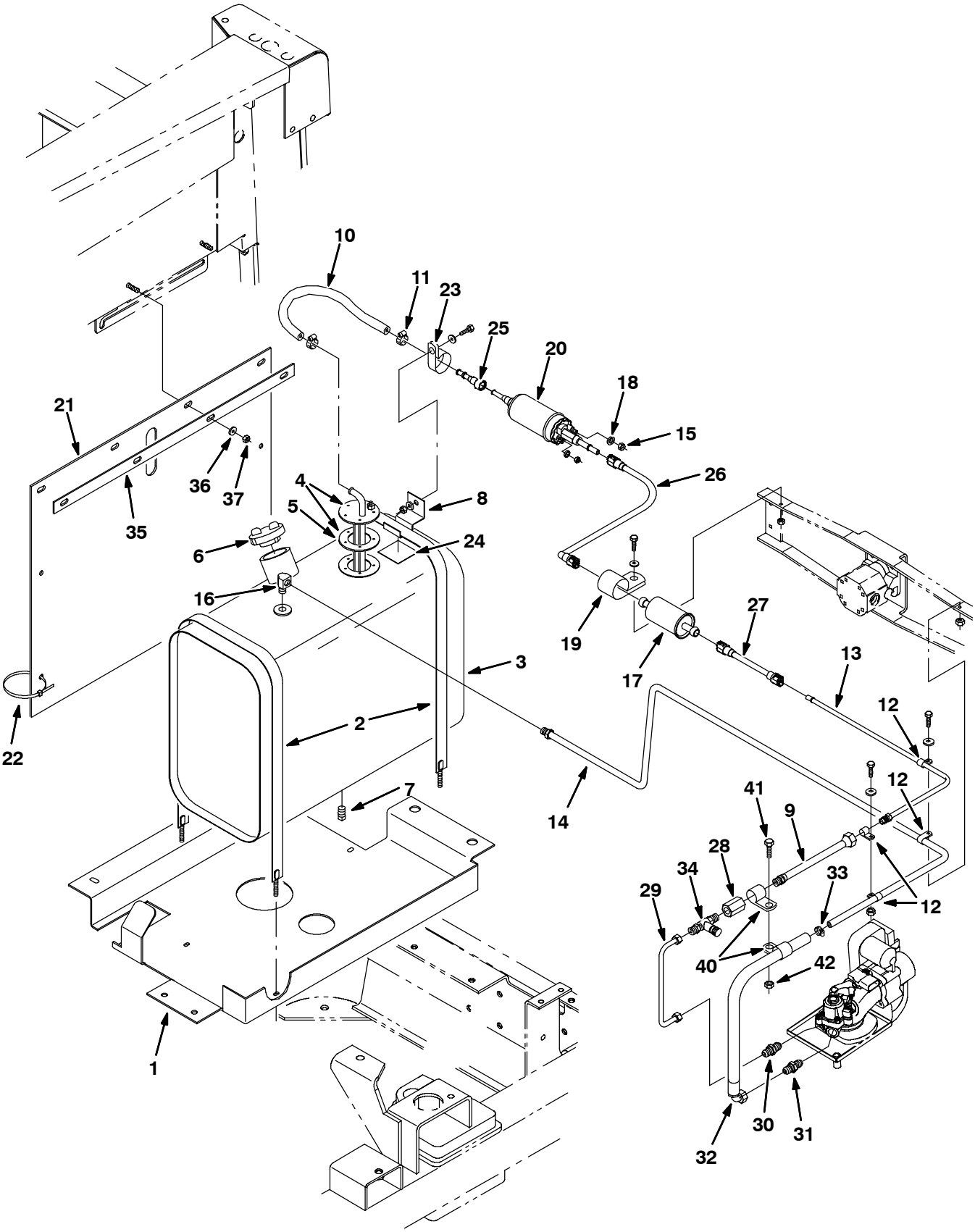

353848 - 8410, G, NA

Fig. 47 - Engine Fuel Tank Group, Gasoline (014000-014999)

	Ref.	Part No.	Serial Number	Description	Qty.
	1	83841	(014000-014999)	Tray, Mtg, Tank, Fuel	1
	2	87396	(014000-014999)	Strap Wldt, Tank, .06th X 1.0w, 37.7l	2
▽	3	9000610	(014000-014999)	Tank, Fuel, 9.4 Gal, W/ Label	1
▲	4	372942	(014000-014999)	Send-Unit, Fuel	1
▲	5	21732	(014000-014999)	Gasket, Sender, Fuel	1
▲	6	48267	(014000-014999)	Cap, Tank, Fuel, 2.3neck 2.6d	1
▲	7	48126	(014000-014999)	Fitting, Pipe, Plug, Pm02 Sq Head	2
	8	392636	(014000-014999)	Bracket, Fltr, Fuel	1
	9	70173	(014000-014999)	Hose, 0050, 04, Im05str /If05str , 10.0	1
	10	72560	(014000-014999)	Hose, Fuel, 0.31id 31.0l	2
	11	43844	(014000-014999)	Clamp, Hose, Wormdrive, 0.25-0.62d	2
	12	26395-2	(014000-014999)	Clamp, Cable, Stl, 0.38d X 0.38w, 1h	4
	13	1012128	(014000-014999)	Fuelline, .31d 05if/Qm Stl	1
	14	1012102	(014000-014999)	Fuelline, .38d .06if/Bea Stl	1
	15	50335	(014000-014999)	Nut, Hex, Std, M5 X 0.8, 8	1
	16	54140	(014000-014999)	Fitting, Brs, E90, If06/Pm04	1
	17	372440	(014000-014999)	Fuel, Fltr [Gm 1.6l/3.0l]	1
	18	32980	(014000-014999)	Washer, Lock, Int, #10	1
	19	41016	(014000-014999)	Clamp, Cable, Stl, 2.25d X 1.00w, 1h	1
	20	1011107	(014000-014999)	Pump, Fuel, Hi-press [Gm 1.6l/3.0l]	1
	21	1014506	(014000-014999)	Skirt, Side	1
	22	49266	(014000-014999)	Tie, Cable, Nyl, 07.3l .19w 1.8 Max D	3
	23	1011895	(014000-014999)	Clamp, Cable, Stl, 2.00d X 0.75w, 1h	1
	24	36661	(014000-014999)	Strip, Rbr, 0.06 01.00w 04.0l	1
	25	1013086	(014000-014999)	Connector, Fuel, Qf	1
	26	1012314	(014000-014999)	Fuelline, .31d E90/Str, Plstc	1
	27	1012248	(014000-014999)	Fuelline, .31d Str/Str, Plstc	1
	28	25610	(014000-014999)	Fitting, Brs, Str, If05/If05	1
	29	1012468	(014000-014999)	Fuelline, .31d 05if/05jf Stl	1
	30	1012677	(014000-014999)	Fitting, Hyd, Str, Jm05/Om06	1
	31	56690	(014000-014999)	Fitting, Hyd, Str, Jm06/Om06	1
	32	1013030	(014000-014999)	Hose, Fuel, Jf06e90, 20.3l	1
	33	54333	(014000-014999)	Clamp, Hose, Wormdrive, 0.31-0.88d	1
	34	1014595	(014000-014999)	Adapter, Fuelline	1
	35	1014659	(014000-014999)	Retainer, Skirt	1
	36	32490	(014000-014999)	Washer, Flat, 0.25 Std	4
	37	08708	(014000-014999)	Nut, Hex, Lock, M6 X 1.0, Nl	4
	38	42368	(014000-014999)	Nut, Hex, Std, M4 X 0.7, 8	1
	39	32978	(014000-014999)	Washer, Lock, Int, #08	1
	40	67767	(014000-014999)	Clamp, Cable, Stl, 0.69d X 0.62w, 1h	2
	41	16931	(014000-014999)	Screw, Hex, M8 X 1.25 X 20, 8.8	1
	42	07791	(014000-014999)	Nut, Hex, Flng, M8 X 1.25	1

Fig. 48 - Engine Fuel Tank Group, Gasoline (015000-)

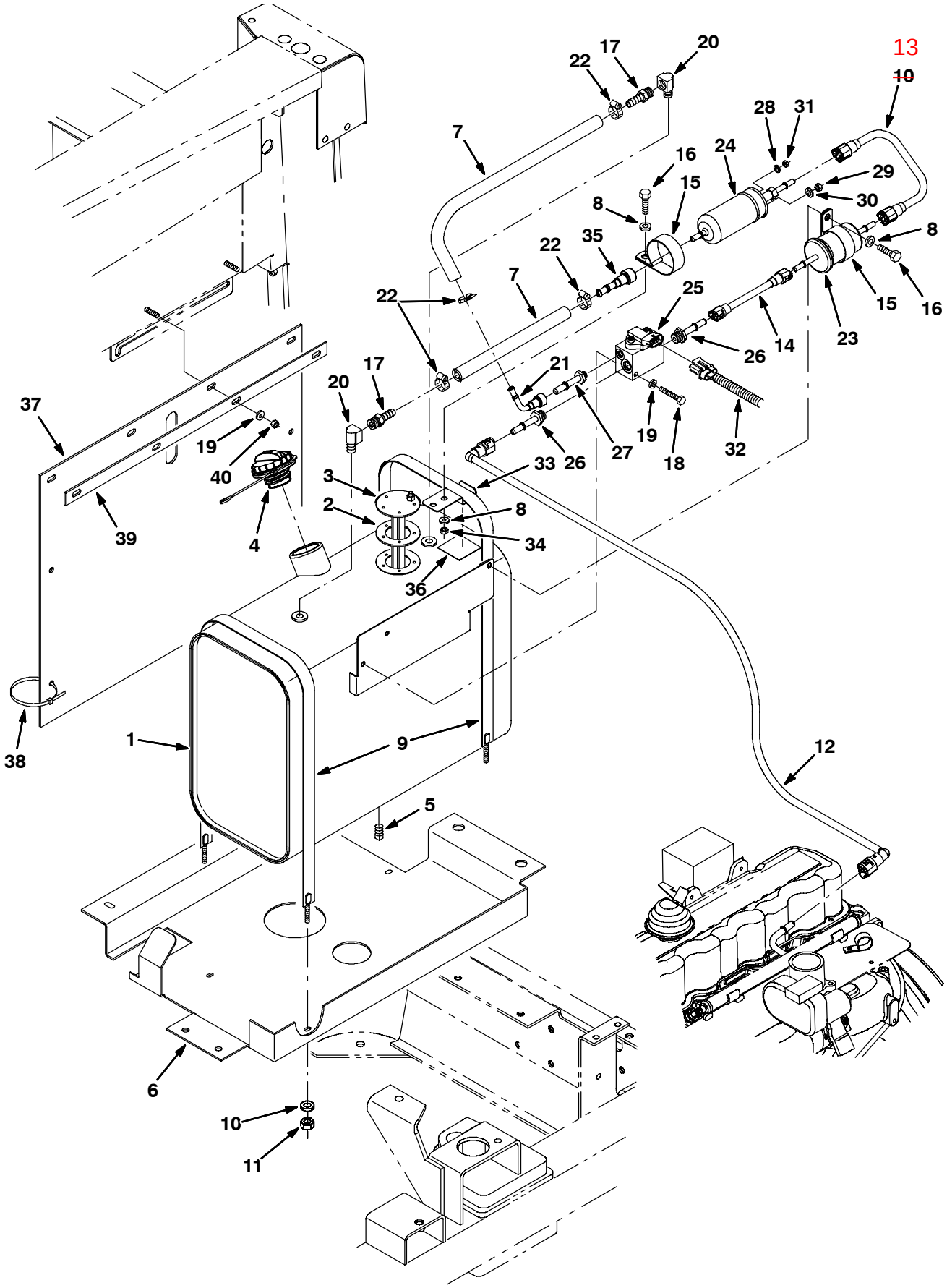

353848 - 8410, G, NA

Fig. 48 - Engine Fuel Tank Group, Gasoline (015000-)

	Ref.	Part No.	Serial Number	Description	Qty.
▽	1	9003609	(015000-)	Tank, Fuel, 09.4gal, W/ Label	1
▲	2	1033897	(015000-)	Gasket, Sender, Fuel	1
▲	3	1033899	(015000-)	Send-Unit, Fuel [800/810 2007]	1
▲	4	1032812	(015000-)	Cap, Fuel, Tank	1
▲	5	48126	(015000-)	Fitting, Pipe, Plug, Pm02 Sq Head	2
	6	83841	(015000-)	Tray, Mtg, Tank, Fuel	1
	7	1033746	(015000-)	Hose, Fuel, 0.31id [Evap Emission 07]	2
	8	32491	(015000-)	Washer, Flat, 0.31, Std	3
	9	87396	(015000-)	Strap Wldt, Tank, 0.06 1.0w 37.7l	2
	10	32483	(015000-)	Washer, Flat, 0.25, Sae	4
	11	32981	(015000-)	Nut, Hex, Lock, .25-20, Nl	4
	12	1030485	(015000-)	Fuelline, .31d E90, 05/06, Plstc	1
	13	1013509	(015000-)	Fuelline, .31d Str/Str, Plstc [8200]	1
	14	1012248	(015000-)	Fuelline, .31d Str/Str, Plstc	1
	15	1011895	(015000-)	Clamp, Cable, Stl, 2.00d X 0.75w, 1hole	1
	16	16931	(015000-)	Screw, Hex, M8 X 1.25 X 20, 8.8	1
	17	392629	(015000-)	Fitting, Brs, Str, Bm05/Pm04	2
	18	06949	(015000-)	Screw, Hex, M6 X 1.0 X 50, 8.8	2
	19	32490	(015000-)	Washer, Flat, 0.25, Std	6
	20	9000355	(015000-)	Fitting, Brs, E90, Em05/Pm04	2
	21	1019939	(015000-)	Connector, Fuel, E90, Qf	1
	22	43844	(015000-)	Clamp, Hose, Wormdrive, 0.25-0.62d, .31w	4
	23	372440	(015000-)	Filter, Fuel [Gm 1.6l/3.0l]	1
	24	1011107	(015000-)	Pump, Fuel, Hi Press [Gm 1.6l/3.0l]	1
	25	1028924	(015000-)	Manifold, Gas, Relief, Valve	1
	26	1029293	(015000-)	Fitting, Fuel, Str, 0.56-18 [07 Eng]	2
	27	1029295	(015000-)	Fitting, Fuel, Str, 0.38-24 [07 Eng]	1
	28	32980	(015000-)	Washer, Lock, Int, #10	1
	29	42368	(015000-)	Nut, Hex, Std, M4 X 0.70, 8	1
	30	32978	(015000-)	Washer, Lock, Int, #08	1
	31	50335	(015000-)	Nut, Hex, Std, M5 X 0.80, 8	1
	32	385009	(015000-)	Harness, Eng	1
	33	1030256	(015000-)	Bracket, Fltr, Fuel [8410 2007]	1
	34	07791	(015000-)	Nut, Hex, Flng, M8 X 1.25	1
	35	1013086	(015000-)	Connector, Fuel, Qf	1
	36	36661	(015000-)	Strip, Rbr, 0.06 01.00w 04.0l	1
	37	1014506	(015000-)	Skirt, Rbr, .12, 20.00w 24.00l, 09/ H&S	1
	38	49266	(015000-)	Tie, Cable, Nyl, 07.3l .19w 1.8 Max D	3
	39	1014659	(015000-)	Retainer, Skirt	1
	40	08708	(015000-)	Nut, Hex, Lock, M6 X 1.00, Nl	4

Fig. 49 - Engine Fuel Tank Group, LPG (000000-013227)

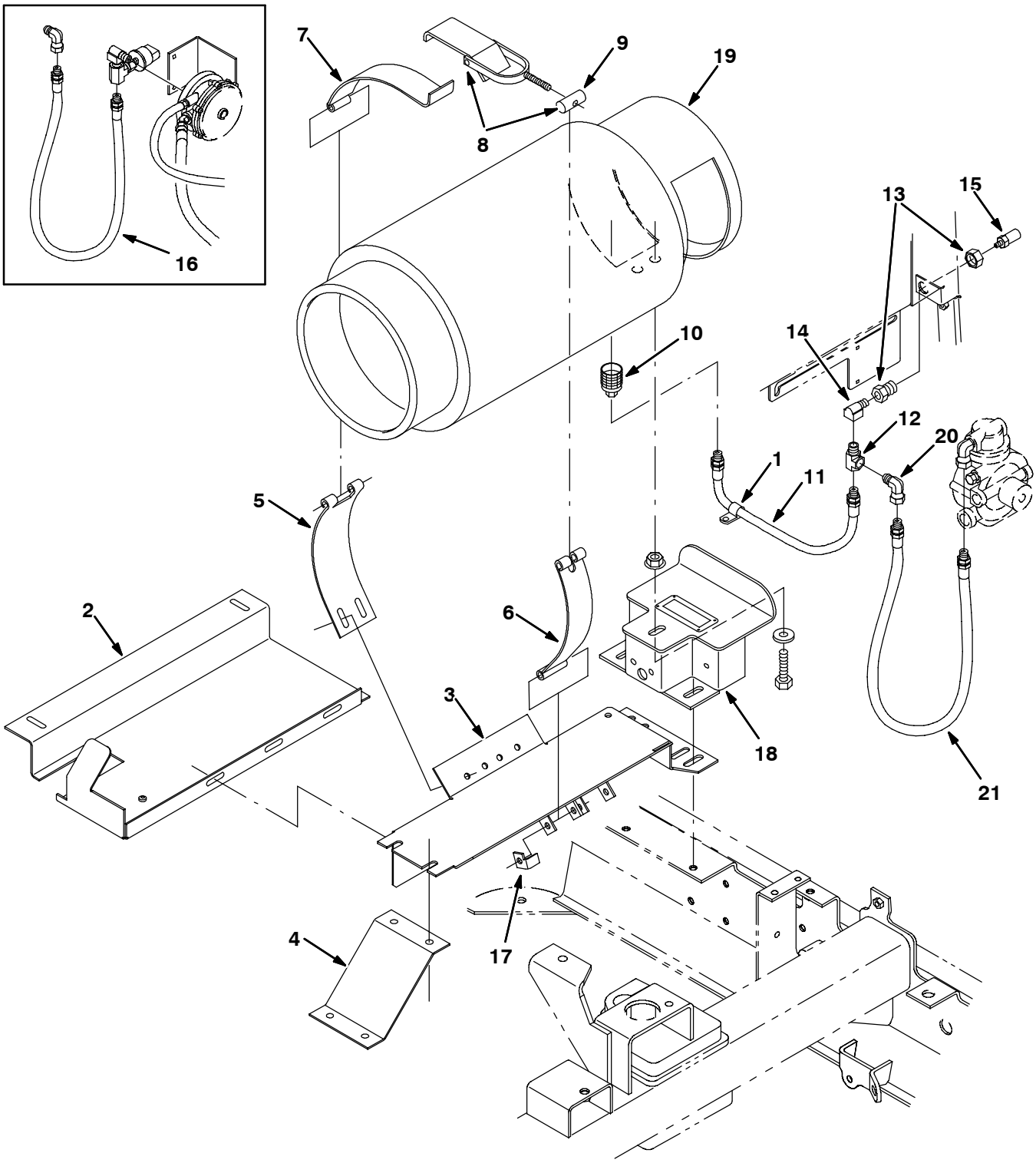

11036 - 8410, LP, NA

Fig. 49 - Engine Fuel Tank Group, LPG (000000-013227)

	Ref.	Part No.	Serial Number	Description	Qty.
	1	67767	(000000-013227)	Clamp-Cable,.69Dia. 62Wth	1
	2	10653	(000000-013227)	Tray, Detergent	1
	3	10652	(000000-013227)	Panel Wldt	1
	4	10654	(000000-013227)	Bracket	1
	5	58589	(000000-013227)	Strap, Mtg.- Lp Tank	1
	6	58590	(000000-013227)	Strap, Tank Retainer - Lp	1
	7	57297	(000000-013227)	Strap, Hinge - Lp Tank Mtg	1
▽	8	53400-1	(000000-013227)	Latch Assy, Lpg Tank Mtg,W/Nut	1
▲	9	53400-4	(000000-013227)	Nut, Adjustable, Lpg Tank Mtg	1
	10	26496	(000000-013227)	Couplng, Quick Disc. Shwd	1
	11	22308	(000000-013227)	Hose, Lpg, 4Lpg X 35.0 Lg	1
	12	56976A	(000000-013227)	Ftg-Tee Npt 04Pm- 04Pf- 04Pf	1
	13	78122	(000000-013227)	Ftg,Bulkhead .25Npt Wh W21204	1
	14	27048	(000000-013227)	Fitting, El 90Npt/Npt 04Pf-	1
	15	24047	(000000-013227)	Valve, Press Relief, Lpg Rego	1
	16	22308-6	(000000-013087)	Hose, Lpg	1
	17	374690	(012776-013227)	Angle, Stop, LP Strap	1
	18	10661	(000000-013227)	Bracket Assy, Lpg Tank W/Label	1
	19	24928-1	(000000-013227)	Tank-Lp,33@,Liq,Both,Fill Ga L	1
	20	11442-1	(000000-013227)	Fitting, Elbow	1
	21	10754	(013088-013227)	Hose, Lpg, Med05, 24.0l	1

Fig. 50 - Engine Fuel Tank Group, LPG (013228-013999)

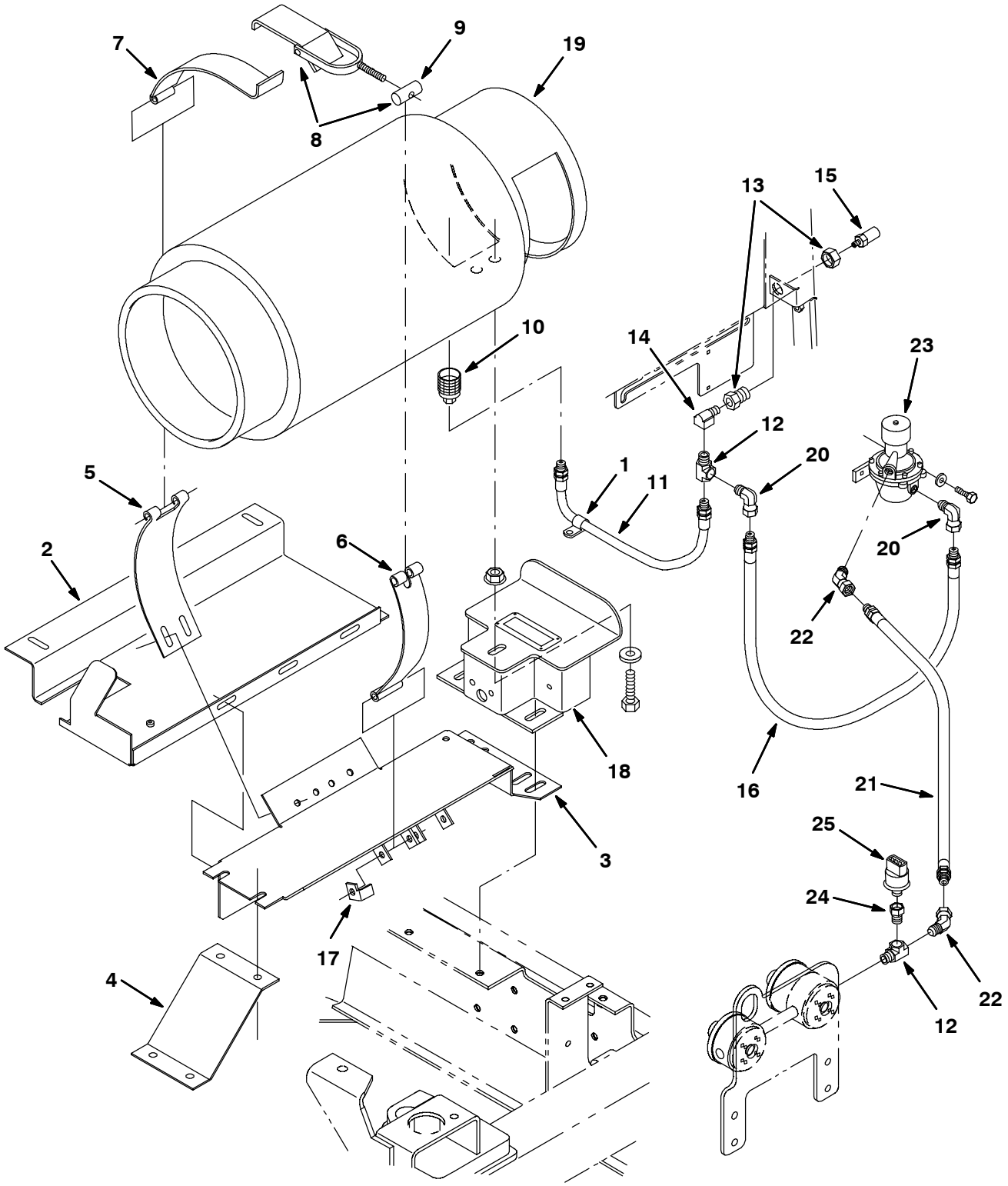

353849 - 8410, LP, NA

Fig. 50 - Engine Fuel Tank Group, LPG (013228-013999)

	Ref.	Part No.	Serial Number	Description	Qty.
	1	67767	(013228-013999)	Clamp-Cable,.69Dia. 62Wth	1
	2	10653	(013228-013999)	Tray, Detergent	1
	3	10652	(013228-013999)	Panel Wldt	1
	4	10654	(013228-013999)	Bracket	1
	5	58589	(013228-013999)	Strap, Mtg.- Lp Tank	1
	6	58590	(013228-013999)	Strap, Tank Retainer - Lp	1
	7	57297	(013228-013999)	Strap, Hinge - Lp Tank Mtg	1
▽	8	53400-1	(013228-013999)	Latch Assy, Lpg Tank Mtg,W/Nut	1
▲	9	53400-4	(013228-013999)	Nut, Adjustable, Lpg Tank Mtg	1
	10	26496	(013228-013999)	Couplng, Quick Disc. Shwd	1
	11	22308	(013228-013999)	Hose, Lpg, 4Lpg X 35.0 Lg	1
	12	56976A	(013228-013999)	Ftg-Tee Npt 04Pm- 04Pf- 04Pf	2
	13	78122	(013228-013999)	Ftg,Bulkhead .25Npt Wh W21204	1
	14	27048	(013228-013999)	Fitting, El 90Npt/Npt 04Pf-	1
	15	24047	(013228-013999)	Valve, Press Relief, Lpg Rego	1
	16	22308-6	(013228-013999)	Hose, Lpg	1
	17	374690	(013228-013999)	Angle, Stop, LP Strap	1
	18	10661	(013228-013999)	Bracket Assy, Lpg Tank W/Label	1
	19	24928-1	(013228-013999)	Tank-Lp,33@,Liq,Both,Fill Ga L	1
	20	11442-1	(013228-013999)	Fitting, Elbow	2
	21	22324	(013228-013999)	Hose, Lpg, Med05, Pm04str/Sm04str, 31.0l	1
	22	47720	(013228-013999)	Fitting, Hyd, E45, Pm04/Pf04	2
▽	23	53395-2	(013228-013999)	Filter, Fuelock, [Ballwin#4-2384b]	1
▲		48282	(013228-013999)	Kit, Repair, Fuelock, Mv 310-6	1
	24	17414	(013228-013999)	Fitting, Pipe, Str, Pm04/Pf02	1
	25	23156	(013228-013999)	Switch, Press, 12vdc 08a Spst Nc 0070psi	1

Fig. 51 - Engine Fuel Tank Group, LPG (014000-014999)

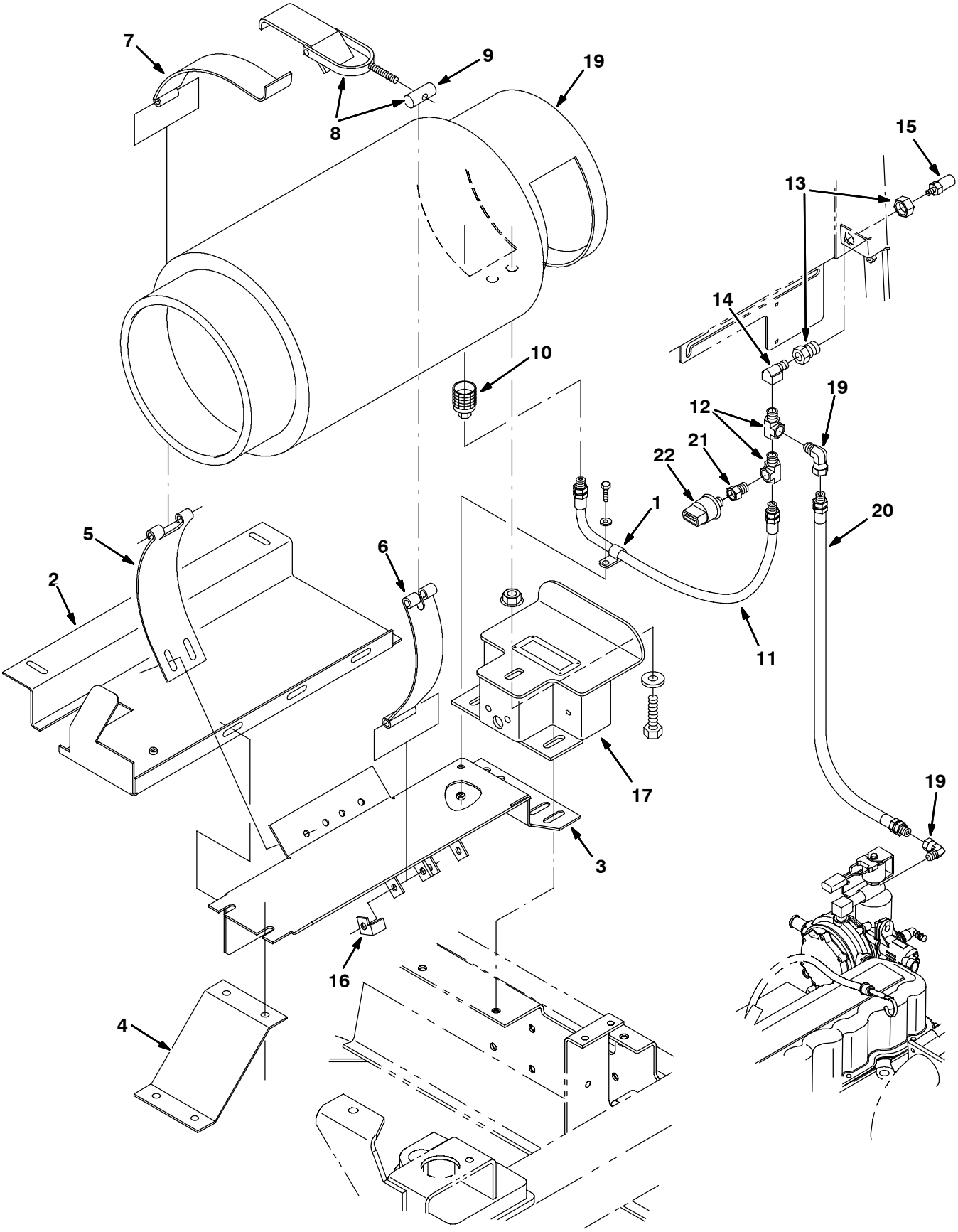

353849 - 8410, LP, NA

Fig. 51 - Engine Fuel Tank Group, LPG (014000-014999)

	Ref.	Part No.	Serial Number	Description	Qty.
	1	67767	(014000-014999)	Clamp, Cable, Stl, 0.69d X 0.62w, 1h	1
	2	10653	(014000-014999)	Tray, Detgt	1
	3	10652	(014000-014999)	Panel Wldt, Cradle, Tank, Lpg	1
	4	10654	(014000-014999)	Bracket, Mtg, Tank, Lpg	1
	5	58589	(014000-014999)	Strap, Mtg, Tank, Lpg	1
	6	58590	(014000-014999)	Strap, Mtg, Tank, Lpg	1
	7	57297	(014000-014999)	Strap, Mtg, Tank, Lpg, Hinge	1
▽	8	53400-1	(014000-014999)	Latch Assy, Mtg, Tank, Lpg, W/Nut	1
▲	9	53400-4	(014000-014999)	Nut, Adj, Mtg, Tank, Lpg	1
	10	26496	(014000-014999)	Fitting, Brs, Qdc, Pf04 Lpg Fem	1
	11	22308	(014000-014999)	Hose, Lpg, Med05, Pm04str/Sm04str, 27.0l	1
	12	56976A	(014000-014999)	Fitting, Hyd, Tee, Pm04/Pf04/Pf04	2
	13	78122	(014000-014999)	Fitting, Brs, Str, Pf04/Pf04, Bkhd	1
	14	27048	(014000-014999)	Fitting, Brs, E90, Pm04/Pf04	1
	15	24047	(014000-014999)	Valve, Lpg, Press Relief, [Rego]	1
	16	374690	(014000-014999)	Angle, Stop, Lp Strap	1
	17	10661	(014000-014999)	Bracket Assy, Tank, W/ Label, Lpg	1
	18	24928-1	(014000-014999)	Tank, Lpg, 33lb, W/ Gauge [Empty] [Liq]	1
	19	11442-1	(014000-014999)	Fitting, Pipe, E90, Sf04/Pm04	2
	20	22324	(014000-014999)	Hose, Lpg, Med05, Pm04str/Sm04str, 31.0l	1
	21	17414	(014000-014999)	Fitting, Pipe, Str, Pm04/Pf02	1
	22	23156	(014000-014999)	Switch, Press, 12vdc 08a Spst Nc 0070psi	1

Fig. 52 - Engine Fuel Tank Group, LPG (015000-)

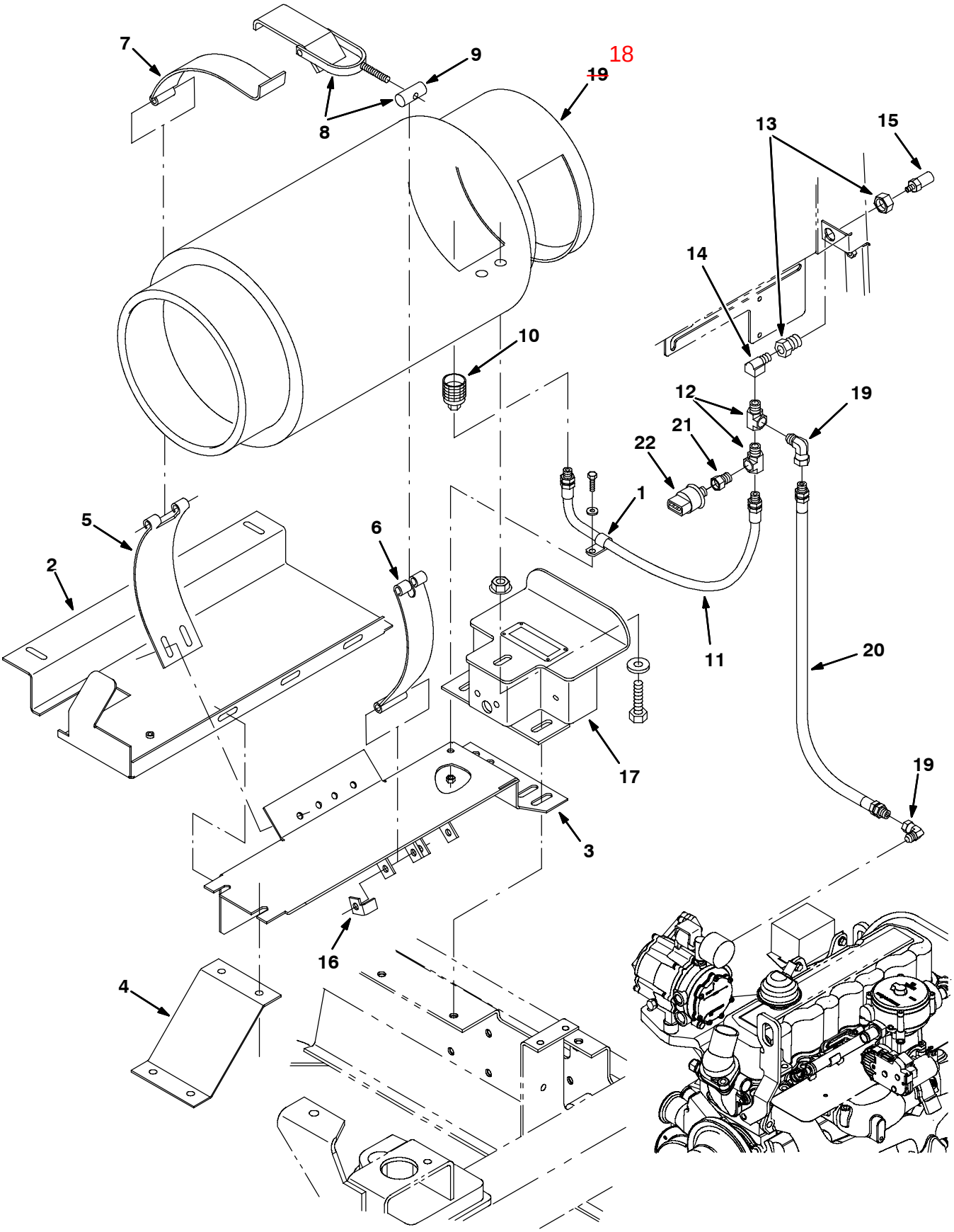

353849 - 8410, LP, NA

Fig. 52 - Engine Fuel Tank Group, LPG (015000-)

	Ref.	Part No.	Serial Number	Description	Qty.
	1	67767	(015000-)	Clamp, Cable, Stl, 0.69d X 0.62w, 1h	1
	2	10653	(015000-)	Tray, Detgt	1
	3	10652	(015000-)	Panel Wldt, Cradle, Tank, Lpg	1
	4	10654	(015000-)	Bracket, Mtg, Tank, Lpg	1
	5	58589	(015000-)	Strap, Mtg, Tank, Lpg	1
	6	58590	(015000-)	Strap, Mtg, Tank, Lpg	1
	7	57297	(015000-)	Strap, Mtg, Tank, Lpg, Hinge	1
▽	8	53400-1	(015000-)	Latch Assy, Mtg, Tank, Lpg, W/Nut	1
▲	9	53400-4	(015000-)	Nut, Adj, Mtg, Tank, Lpg	1
	10	26496	(015000-)	Fitting, Brs, Qdc, Pf04 Lpg Fem	1
	11	22308	(015000-)	Hose, Lpg, Med05, Pm04str/Sm04str, 27.0l	1
	12	56976A	(015000-)	Fitting, Hyd, Tee, Pm04/Pf04/Pf04	2
	13	78122	(015000-)	Fitting, Brs, Str, Pf04/Pf04, Bkhd	1
	14	27048	(015000-)	Fitting, Brs, E90, Pm04/Pf04	1
	15	24047	(015000-)	Valve, Lpg, Press Relief, [Rego]	1
	16	374690	(015000-)	Angle, Stop, Lp Strap	1
	17	10661	(015000-)	Bracket Assy, Tank, W/ Label, Lpg	1
	18	24928-1	(015000-)	Tank, Lpg, 33lb, W/ Gauge [Empty] [Liq]	1
	19	11442-1	(015000-)	Fitting, Pipe, E90, Sf04/Pm04	2
	20	19760	(015000-)	Hose, Lpg, Med05, Pm04str/Sm04str, 055.0	1
	21	17414	(015000-)	Fitting, Pipe, Str, Pm04/Pf02	1
	22	23156	(015000-)	Switch, Press, 12vdc 08a Spst Nc 0070psi	1

Fig. 53 - Engine Radiator and Hydraulic Cooler Group (000000-012179)

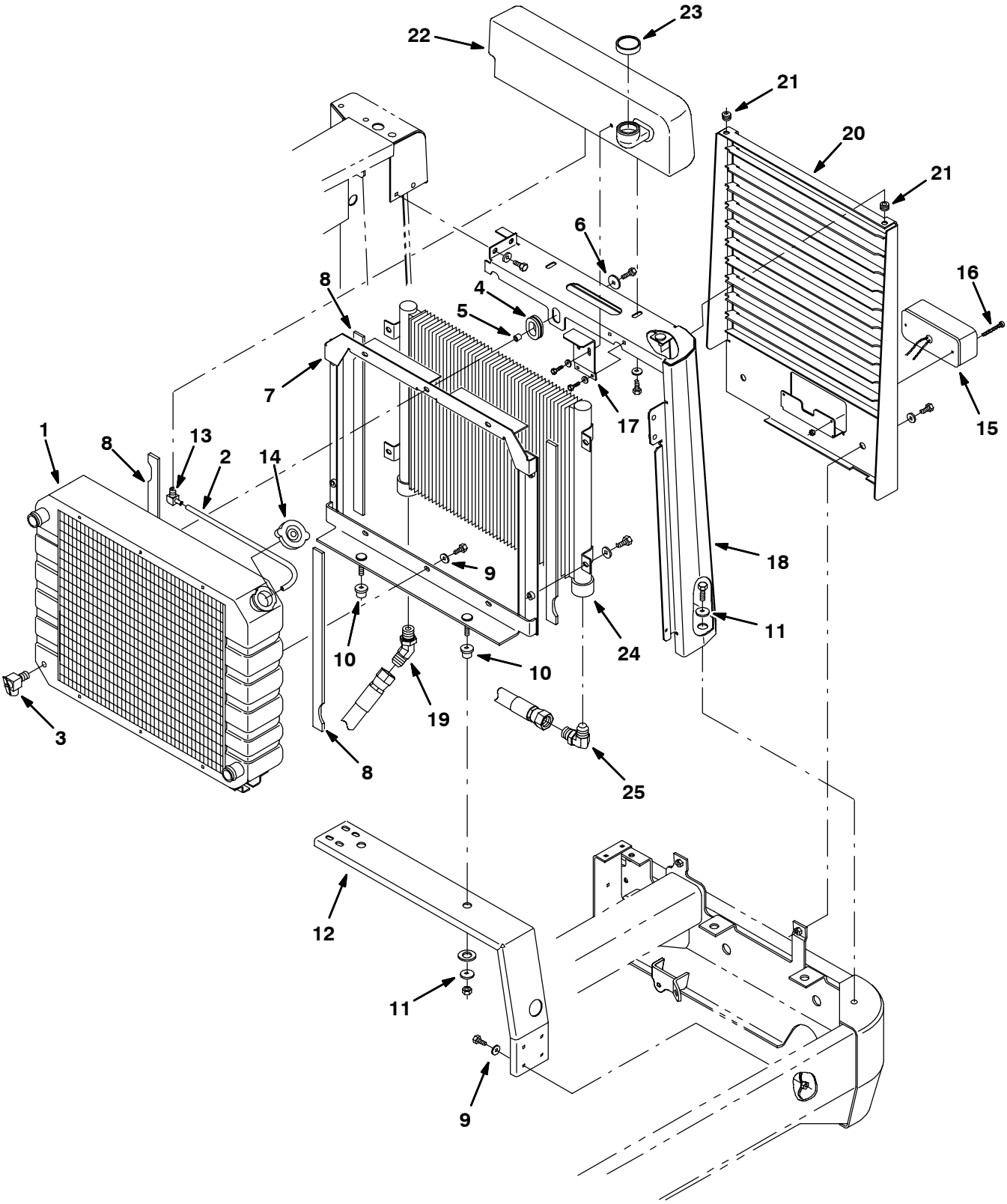

10999 - ALL

Fig. 53 - Engine Radiator and Hydraulic Cooler Group (000000-012179)

	Ref.	Part No.	Serial Number	Description	Qty.
▽	1	1018063AM	(000000-012179)	Radiator, F/1018063 Afmkt	1
▲	2	61683	(000000-012179)	Hose	1
	3	51305	(000000-012179)	Drain Cock,.25Npt Wh#120 Angl	1
	4	10632-14	(000000-012179)	Grommet,Rbr,1.00Id,For .12Matl	1
	5	22140	(000000-012179)	Sleeve, .370B .50D .50 Butwcd	1
	6	30013	(000000-012179)	Washer-Flt .31 Fender Pltd	1
	7	78928	(000000-012179)	Frame Wldt, Mtg, Radiator	1
	8	63818	(000000-012179)	Seal, Duct	4
	9	41186	(000000-012179)	Washer-Belleville .31 Pltd	11
	10	54274	(000000-012179)	Isolator-Vibration,125Lb.Ratng	2
	11	13248	(000000-012179)	Washer .400B 1.12D .12Cr Znc	3
	12	72688	(000000-012179)	Channel, Mounting, Radiator	1
	13	08228	(000000-012179)	Ftg. Brass, Elb, 0.4Npt-.04 Brb	1
	14	31755	(000000-012179)	Cap Radiator	1
	15	84030	(000000-012179)	Taillight Assy, W/Quick Disc	1
	16	54093	(000000-012179)	Screw-Chs M 5X0.8 60 4.8	2
	17	83845	(000000-012179)	Bracket, Support	1
	18	83753	(000000-012179)	Panel Wldt, Corner	1
	19	57479	(000000-012179)	Ftg-Hyd E45	1
	20	83740	(000000-012179)	Grill	1
	21	10632-12	(000000-012179)	Grommet,Rbr,0.38Id,For .12Matl	2
	22	83784	(000000-012179)	Tank, Radiator Fill	1
	23	83844	(000000-012179)	Cap, Tank, Overlfow	1
	24	73106	(000000-012179)	Cooler, Hyd 25Gpm 400Btu 0500	1
	25	53077	(000000-012179)	Ftg-Hyd E90 Jm16/Om16	1

Fig. 54 - Engine Radiator and Hydraulic Cooler Group (012180-013227)

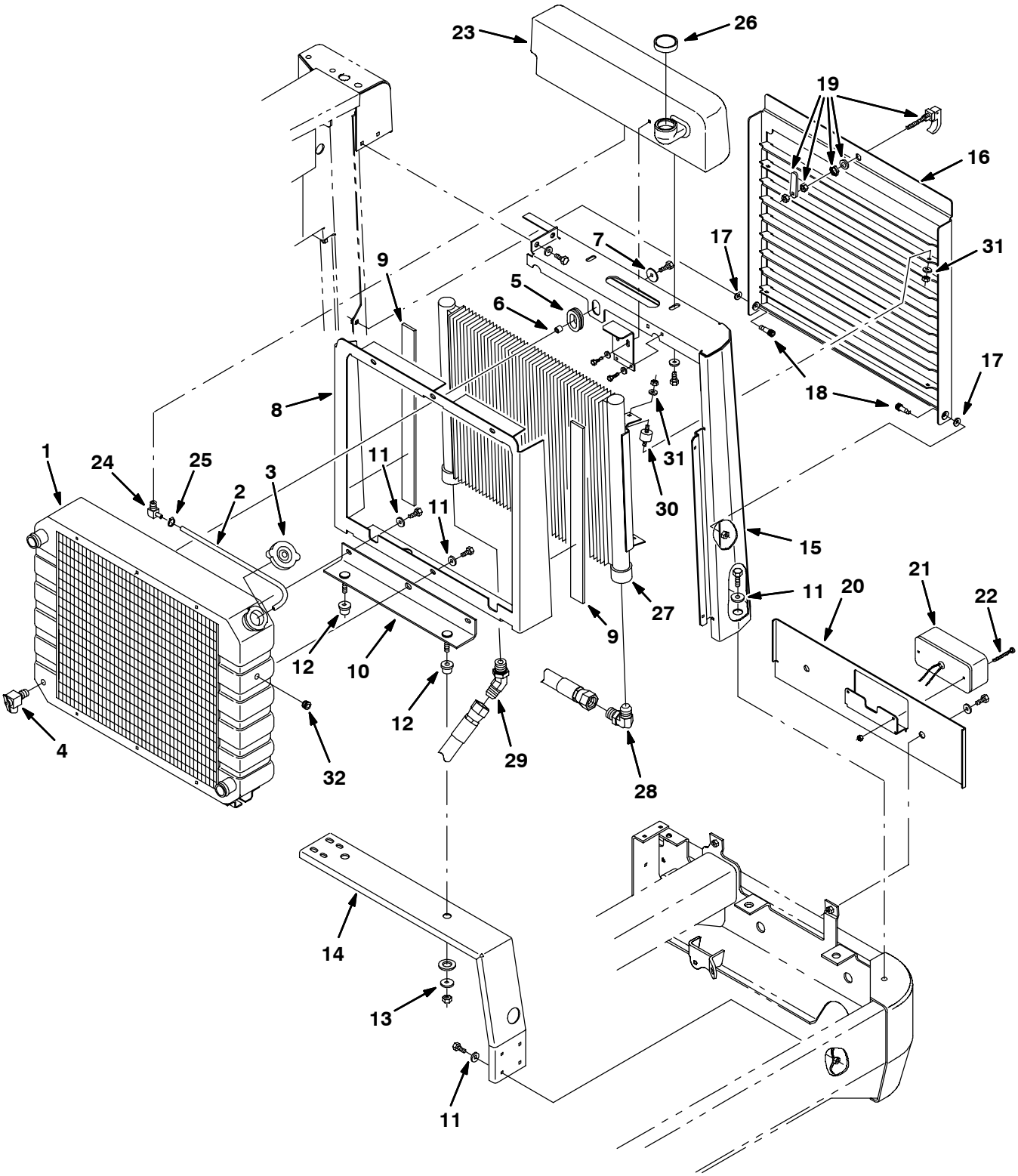

350492 - ALL

Fig. 54 - Engine Radiator and Hydraulic Cooler Group (012180-013227)

	Ref.	Part No.	Serial Number	Description	Qty.
▽	1	1018063AM	(012180-013227)	Radiator, F/1018063 Afmkt	1
▲	2	61683	(012180-013227)	Hose	1
	3	31755	(012180-013227)	Cap Radiator	1
	4	51305	(012180-013227)	Drain Cock,.25Npt Wh#120 Angl	1
	5	10632-14	(012180-013227)	Grommet,Rbr,1.00Id,For .12Matl	1
	6	22140	(012180-013227)	Sleeve, .370B .50D .50 Butwcd	1
	7	30013	(012180-013227)	Washer-Flt .31 Fender Pltd	1
	8	83575	(012180-013227)	Frame, Air Duct	1
	9	63818	(012180-013227)	Seal, Duct	2
	10	84136	(012180-013227)	Plate, Mtg, Radiator	1
	11	41186	(012180-013227)	Washer-Belleville .31 Pltd	11
	12	54274	(012180-013227)	Isolator-Vibration,125Lb.Ratng	2
	13	13248	(012180-013227)	Washer .400B 1.12D .12Cr Znc	4
	14	72688	(012180-013227)	Channel, Mounting, Radiator	1
	15	84127	(012180-013227)	Tower Wldt, Corner	1
	16	84132	(012180-013227)	Grill Wldt, Rear	1
	17	43611	(012180-013227)	Washer, .391B .75D .06Nylon	1
	18	02129	(012180-013227)	Scr-Shld .375Dx0.38L .31-18	1
	19	20838	(012180-013227)	Fastener, Southco #62-10-102-30	1
	20	84128	(012180-013227)	Plate, Mtg, Channel	1
	21	84030	(012180-013227)	Taillight Assy, W/Quick Disc	1
	22	54093	(012180-013227)	Screw-Chs M 5X0.8 60 4.8	2
	23	83784	(012180-013227)	Tank, Radiator Fill	1
	24	08228	(012180-013227)	Ftg. Brass, Elb, 0.4Npt-.04 Brb	1
	25	43844	(012180-013227)	Clamp-Wormdrive, 0.25-0.62D	1
	26	83844	(012180-013227)	Cap, Tank, Overlfow	1
	27	84134	(012180-013227)	Cooler, Hydraulic	1
	28	53077	(012180-013227)	Ftg-Hyd E90 Jm16/Om16	1
	29	57479	(012180-013227)	Ftg-Hyd E45	1
	30	51322	(012180-013227)	Isolator-Vibration .31-18	4
	31	43952	(012180-013227)	Washer-Loc int .31 Ss	8
	32	02247	(xxxxxx-013227)	Fitting, Plug	1

Fig. 55 - Engine Radiator and Hydraulic Cooler Group (013228-)

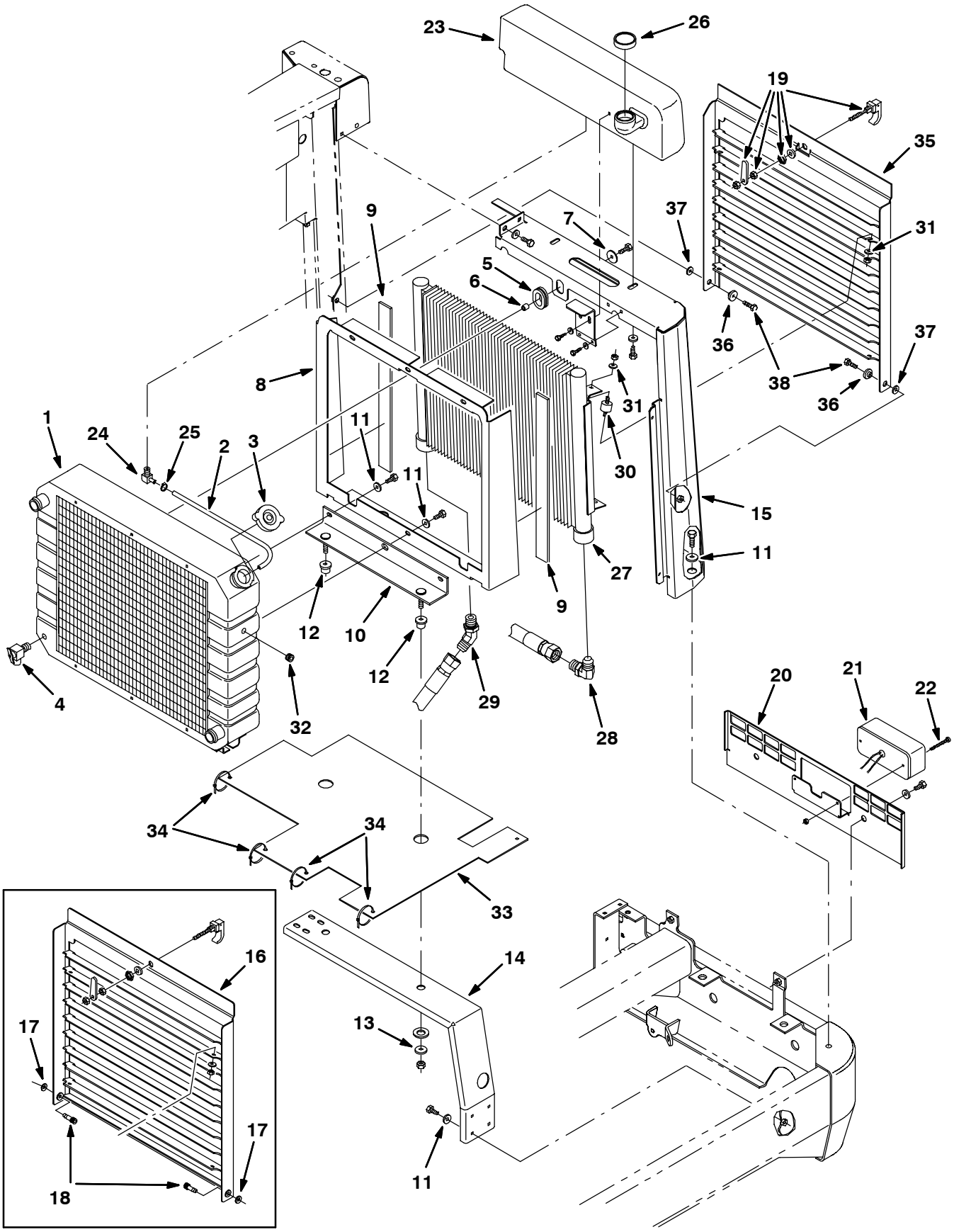

353850 - ALL

Fig. 55 - Engine Radiator and Hydraulic Cooler Group (013228-)

	Ref.	Part No.	Serial Number	Description	Qty.
▽	1	1018063AM	(013228-)	Radiator, F/1018063 Afmkt	1
▲	2	61683	(013228-)	Hose	1
	3	368132	(013228-)	Cap, Radiator, 15psi, [Stant #a02502]	1
	4	51305	(013228-)	Drain Cock,.25Npt Wh#120 Angl	1
	5	10632-14	(013228-)	Grommet,Rbr,1.00Id,For .12Matl	1
	6	22140	(013228-)	Sleeve, .370B .50D .50 Butwcd	1
	7	30013	(013228-)	Washer-Flt .31 Fender Pltd	1
	8	1013941	(013228-)	Shroud, Duct, Air	1
	9	63818	(013228-)	Seal, Duct	2
	10	84136	(013228-)	Plate, Mtg, Radiator	1
	11	41186	(013228-)	Washer-Belleville .31 Pltd	11
	12	54274	(013228-)	Isolator-Vibration,125Lb.Ratng	2
	13	13248	(013228-)	Washer .400B 1.12D .12Cr Znc	4
	14	72688	(013228-)	Channel, Mounting, Radiator	1
	15	84127	(013228-)	Tower Wldt, Corner	1
	16	84132	(013228-014023)	Grill Wldt, Rear	1
	17	43611	(013228-014023)	Washer, .391B .75D .06Nylon	1
	18	02129	(013228-014023)	Scr-Shld .375Dx0.38L .31-18	1
	19	20838	(013228-)	Fastener, Southco #62-10-102-30	1
	20	1014689	(013228-)	Plate, Mtg, Channel	1
	21	84030	(013228-)	Taillight Assy, W/Quick Disc	1
	22	393203	(013228-)	Screw, Chz, M 5 X 0.8 X 55, 4.8	2
	23	83784	(013228-)	Tank, Radiator Fill	1
	24	08228	(013228-)	Ftg. Brass, Elb, 0.4Npt-.04 Brb	1
	25	43844	(013228-)	Clamp-Wormdrive, 0.25-0.62D	1
	26	83844	(013228-)	Cap, Tank, Overlfow	1
	27	84134	(013228-)	Cooler, Hydraulic	1
	28	53077	(013228-)	Ftg-Hyd E90 Jm16/Om16	1
	29	57479	(013228-)	Ftg-Hyd E45	1
	30	51322	(013228-)	Isolator-Vibration .31-18	4
	31	43952	(013228-)	Washer-Loc int .31 Ss	8
	32	02247	(013228-)	Fitting, Plug	1
	33	1012199	(013228-)	Skirt, Recirculation	1
	34	49266	(013228-)	Tie, Cable, Nyl, 07.3l .19w 1.8 Max D	4
	35	84129	(014024-)	Grill, Rear	1
	36	80950	(014024-)	Bushing, Flng, 0.32b 0.50d 0.24l, Bnz	2
	37	32490	(014024-)	Washer, Flat, 0.25 Std	2
	38	76955	(014024-)	Screw, Hex, .31-18 X 1.00, 5	2

Fig. 56 - Engine Radiator Housing and Fan Motor Group (000000-014999)

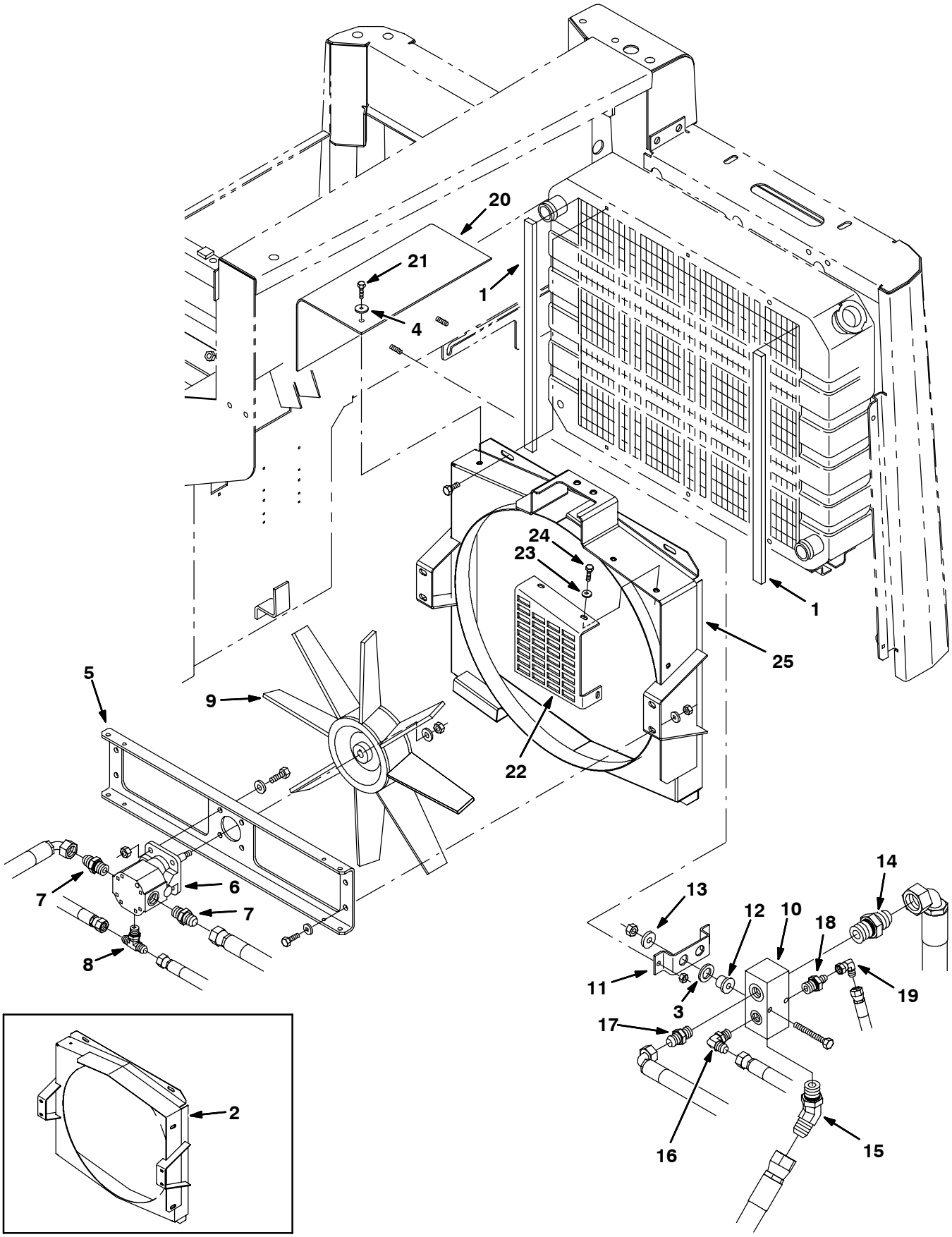

11018 - G, LP

Fig. 56 - Engine Radiator Housing and Fan Motor Group (000000-014999)

Ref.	Part No.	Serial Number	Description	Qty.
1	48629	(000000-014999)	Seal,Foam Rbr, .38 .75W 18.2L	2
2	380726	(000000-013999)	Guard Wldt, Fan W/Label	1
3	39350	(000000-014999)	Washer-Flt .75	2
4	41178	(000000-014999)	Washer-Flt .25 Fender Pltd	1
5	1018919	(000000-014999)	Channel, Mtg, Fan Motor	1
6	73098	(000000-014999)	Motor, Hyd Gear Ex 0.26 R3000	1
7	52402	(000000-014999)	Ftg-Hyd Str Jm06/Om08	2
8	31599	(000000-014999)	Ftg-Hyd Tee Jm04Omjm	1
9	375586	(000000-014999)	Fan, Radiator	1
10	73108	(000000-014999)	Manifold, Hyd Collector	1
11	10740	(000000-014999)	Bracket, Support	1
12	54274	(000000-014999)	Isolator-Vibration,125Lb.Ratng	2
13	13248	(000000-014999)	Washer .400B 1.12D .12Cr Znc	2
14	52929	(000000-014999)	Ftg-Hyd Str Jm16/Om16	1
15	16081	(000000-014999)	Ftg-Hyd E45 Jm12/Om12	1
16	56820	(000000-014999)	Ftg-Hyd E90 Jm06/Om06	1
17	44869	(000000-014999)	Fitting, Hyd, Str, Jm08/Om08	1
18	55686	(000000-014999)	Ftg-Hyd Str Jm04/Om08	1
19	39210	(000000-014999)	Ftg-Hyd E90 Jm04/Jf04	1
20	75375	(000000-014999)	Flap, Containment	1
21	06943	(000000-014999)	Scr Hex M6X1.0	1
22	1019351	(014000-014999)	Shield, Fan	1
23	32483	(014000-014999)	Washer, Flat, 0.25 Sae	3
24	06943	(014000-014999)	Screw, Hex, M6 X 1.0 X 20, 8.8	3
25	9001064	(014000-014999)	Shroud Wldt, Fan, Radiator, W/ Label	1

Fig. 57 - Engine Radiator Housing and Fan Motor Group (015000-)

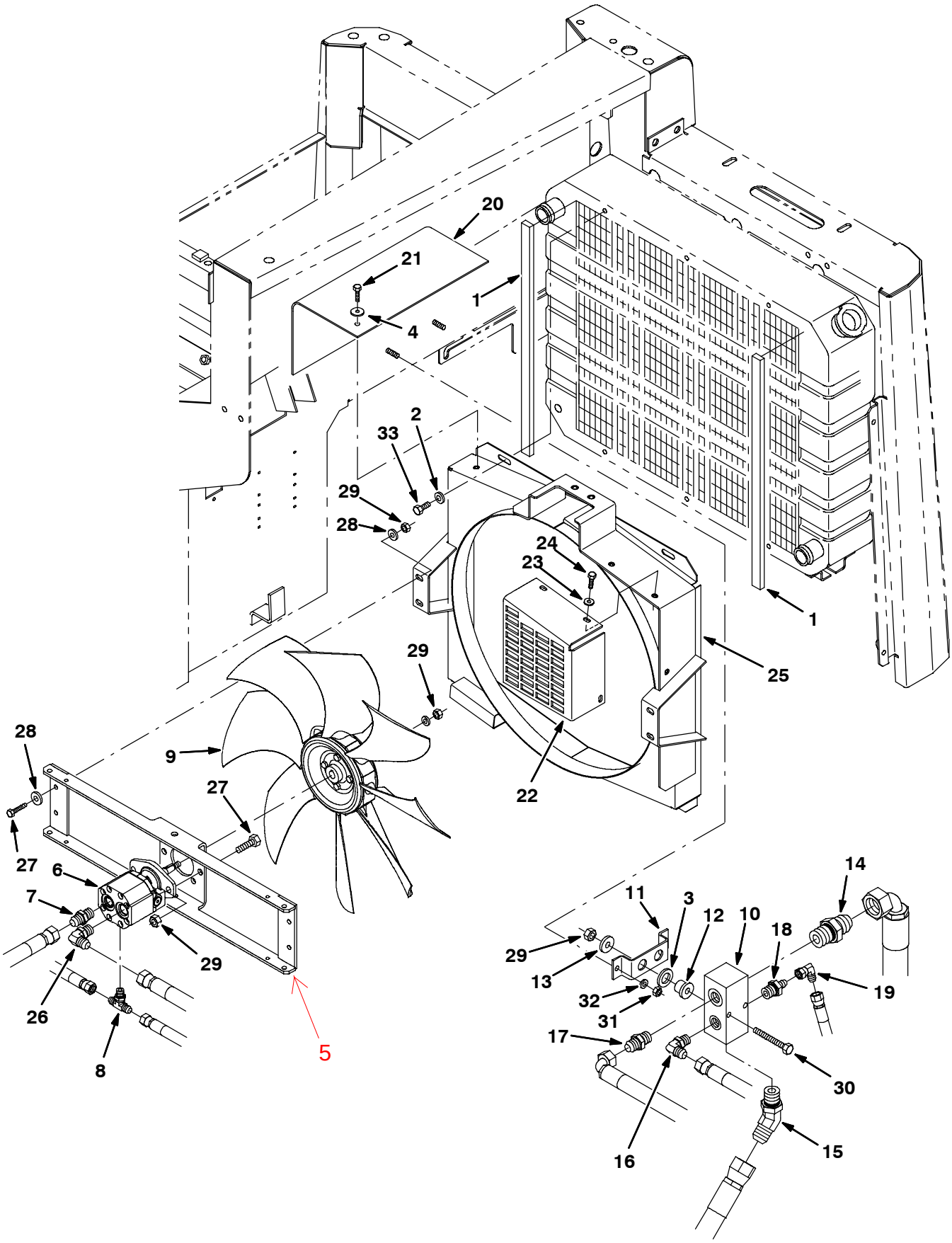

11018 - G, LP

Fig. 57 - Engine Radiator Housing and Fan Motor Group (015000-)

Ref.	Part No.	Serial Number	Description	Qty.
1	48629	(015000-)	Seal,Foam Rbr, .38 .75W 18.2L	2
2	41186	(015000-)	Washer, Flat, Belleville, .31	4
3	39350	(015000-)	Washer-Flt .75	2
4	41178	(015000-)	Washer-Flt .25 Fender Pltd	1
5	103344	(015000-)	Channel, Mtg, Fan Motor	1
6	71719	(015000-)	Motor, Hyd, Gear, Ext 0.29 Rh 3000	1
7	52402	(015000-)	Fitting, Hyd, Str, Jm06/Om08	1
8	31599	(015000-)	Ftg-Hyd Tee Jm04Omjm	1
9	375586	(015000-)	Fan, Radiator	1
10	73108	(015000-)	Manifold, Hyd Collector	1
11	10740	(015000-)	Bracket, Support	1
12	54274	(015000-)	Isolator-Vibration,125Lb.Ratng	2
13	13248	(015000-)	Washer .400B 1.12D .12Cr Znc	2
14	52929	(015000-)	Ftg-Hyd Str Jm16/Om16	1
15	16081	(015000-)	Ftg-Hyd E45 Jm12/Om12	1
16	56820	(015000-)	Ftg-Hyd E90 Jm06/Om06	1
17	44869	(015000-)	Fitting, Hyd, Str, Jm08/Om08	1
18	55686	(015000-)	Ftg-Hyd Str Jm04/Om08	1
19	39210	(015000-)	Ftg-Hyd E90 Jm04/Jf04	1
20	75375	(015000-)	Flap, Containment	1
21	06943	(015000-)	Scr Hex M6X1.0	1
22	1033687	(015000-)	Shield, Fan, Gas/Lpg [8410 07]	1
23	32483	(015000-)	Washer, Flat, 0.25 Sae	3
24	06943	(015000-)	Screw, Hex, M6 X 1.0 X 20, 8.8	3
25	9001064	(015000-)	Shroud Wldt, Fan, Radiator, W/ Label	1
26	47512	(015000-)	Fitting, Hyd, E90, Jm06/Om08	1
27	39277	(015000-)	Screw, Hex, M8 X 1.25 X 25, 8.8	6
28	32491	(015000-)	Washer, Flat, 0.31, Std	8
29	08709	(015000-)	Nut, Hex, Lock, M8 X 1.25, Nl	9
30	06958	(015000-)	Screw, Hex, M8 X 1.25 X 80, 8.8	2
31	08708	(015000-)	Nut, Hex, Lock, M6 X 1.00, Nl	2
32	19066	(015000-)	Washer, Flat, #10	4
33	16735	(015000-)	Screw, Hex, M8 X 1.25 X 16, 8.8	4

Fig. 58 - Engine Radiator Hose and Hydraulic Filter Group (000000-013227)

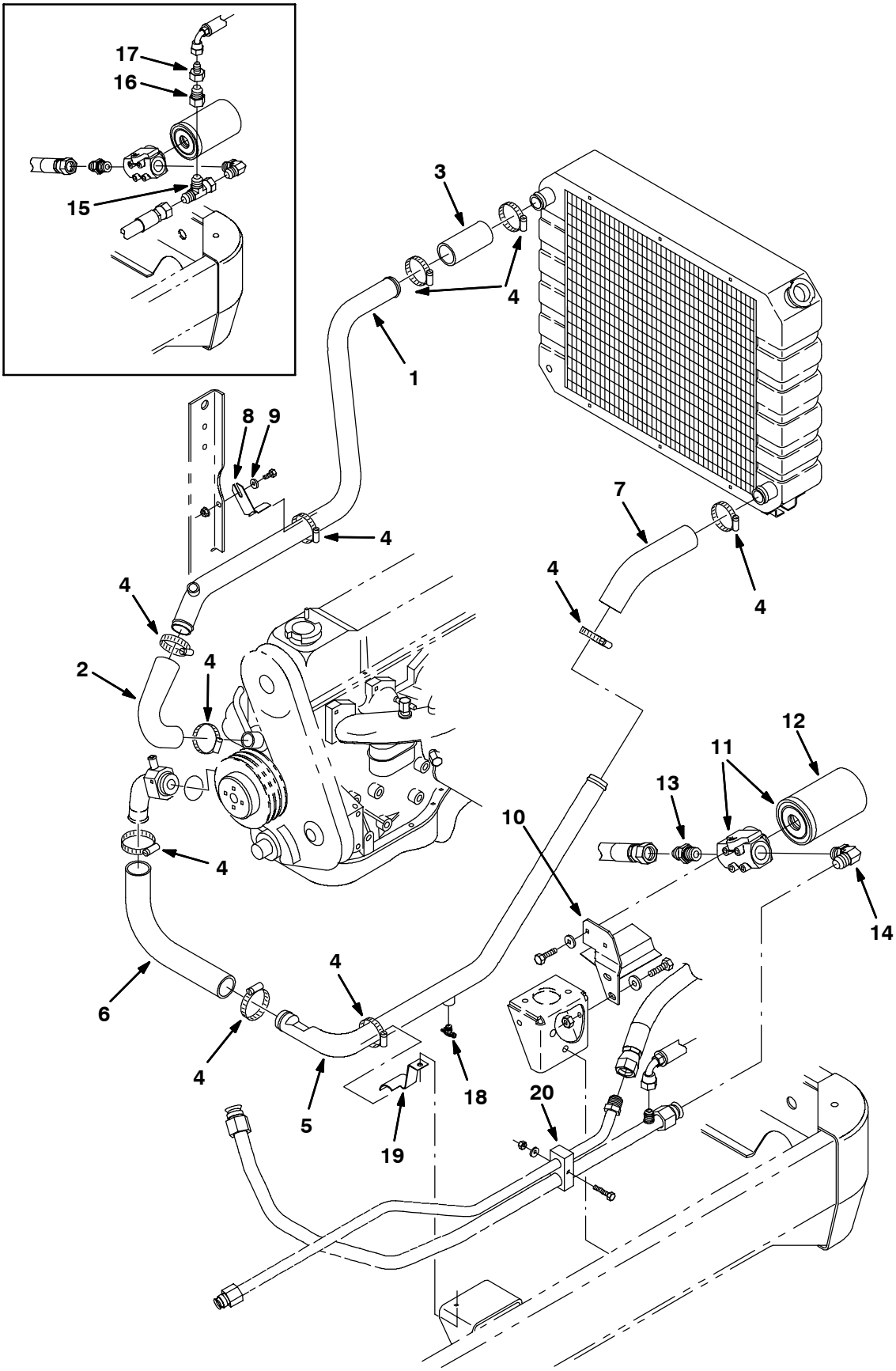

11014 - 8410, G, LP, NA

Fig. 58 - Engine Radiator Hose and Hydraulic Filter Group (000000-013227)

	Ref.	Part No.	Serial Number	Description	Qty.
	1	83746	(000000-013227)	Tube, Radiator, Upper, Gas/Lpg	1
	2	70636	(000000-013227)	Hose, Radiator, Upper	1
	3	74944	(000000-013227)	Coupling, Hose	1
	4	79381	(000000-013227)	Clamp Wormdrive, 1.25-2.00	10
	5	73266	(000000-013227)	Tube, Radiator, Lower, Gas/Lpg	1
	6	83690	(000000-013227)	Hose, Radiator, Lower	1
	7	77289	(000000-013227)	Hose, Elbow, Molded 45 1.50Id	1
	8	74058	(000000-013227)	Bracket	1
	9	41185	(000000-013227)	Washer-Belleville .25 Pltd	1
	10	77362	(000000-013227)	Bracket Wldt	1
▽	11	10664	(000000-013227)	Filter Assy, Spin-On	1
▲	12	65221	(000000-013227)	Element, Filter	1
	13	34357	(000000-013227)	Ftg-Hyd Str Jm16/Om12	1
	14	52142	(000000-013227)	Ftg-Hyd E90 Jm16/Om12	1
	15	73113	(000000-012574)	Fitting-Hyd Tee	1
	16	35002	(000000-012574)	Ftg-Hyd Str See60054 Jm12/Jf16	1
	17	78143	(000000-012574)	Ftg-Hyd Str Jm08/Jf12	1
	18	54911-32	(000000-013227)	Fitting, Brass Drain Cock	1
	19	84123	(000000-013227)	Bracket, MTG, Radiator Tube	1
	20	84169	(012513-013227)	Clamp-Tube 2 Hole	1

Fig. 59 - Engine Radiator Hose and Hydraulic Filter Group (013228-013999)

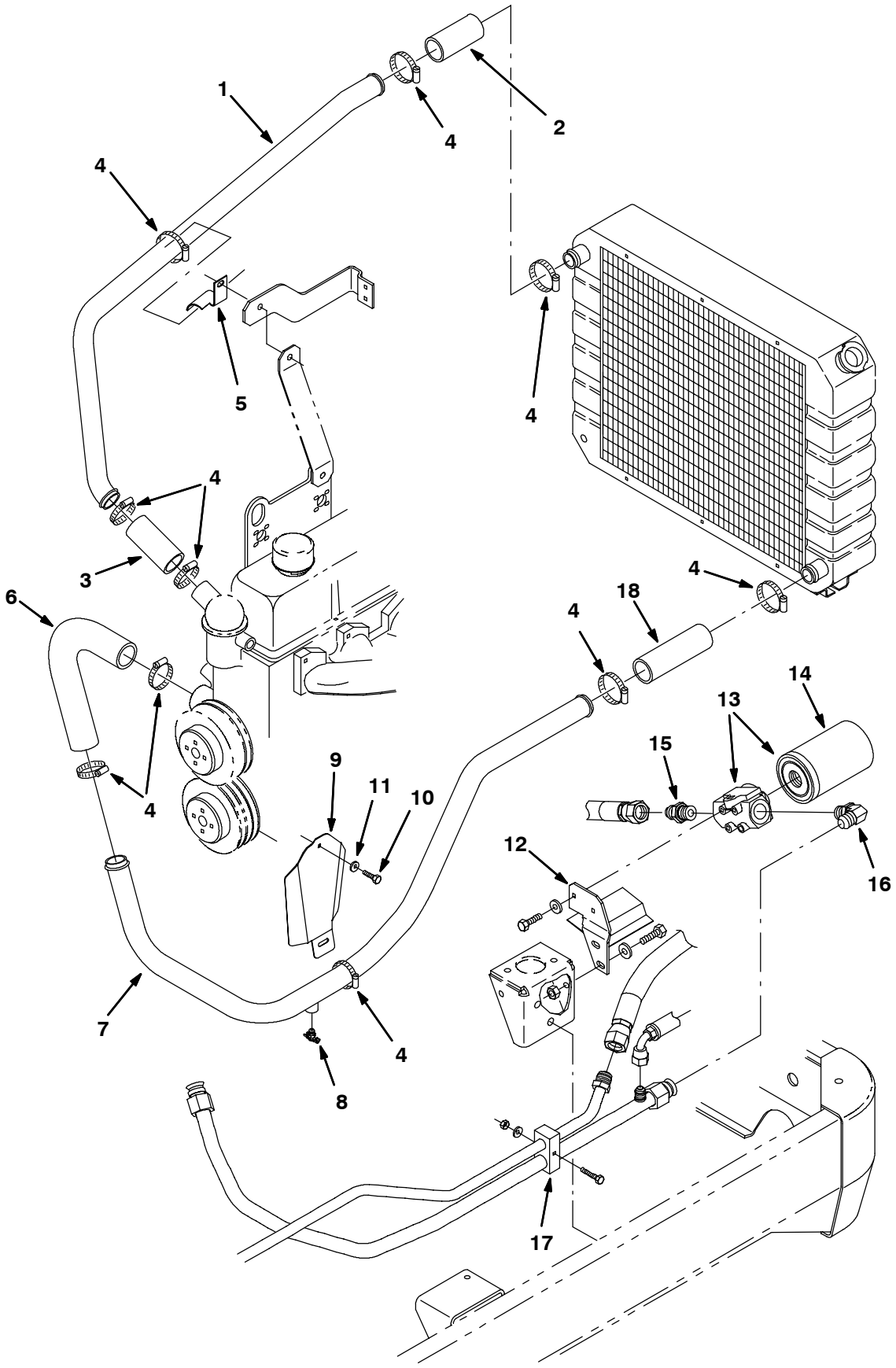

353851 - 8410, G, LP, NA

Fig. 59 - Engine Radiator Hose and Hydraulic Filter Group (013228-013999)

	Ref.	Part No.	Serial Number	Description	Qty.
	1	392584	(013228-013999)	Tube, Coolant, 1.5d Upper, Gas/Lpg	1
	2	74944	(013228-013999)	Hose, Rbr, 1.50id 1.88od 04.0l	1
	3	62378	(013228-013999)	Hose, Rbr, 1.25id 1.62od 03.0l	1
	4	79381	(013228-013999)	Clamp Wormdrive, 1.25-2.00	10
	5	392638	(013228-013999)	Bracket, Mtg, Radiator, Tube, Upper	1
	6	392647	(013228-013999)	Hose, Coolant, 1.50id To 1.75id, Mold	1
	7	392583	(013228-013999)	Tube, Coolant, 1.5d W/.25npt Low,Gas/Lpg	1
	8	54911-32	(013228-013999)	Fitting, Brass Drain Cock	1
	9	393216	(013228-013999)	Plate, Shield, Heat, w/Label	1
	10	54396	(013228-013999)	Screw, Hex, .31-18 X 0.75, 5	1
	11	32491	(013228-013999)	Washer, Flat, .31 Std	1
	12	77362	(013228-013999)	Bracket Wldt	1
▽	13	10664	(013228-013999)	Filter Assy, Spin-On	1
▲	14	65221	(013228-013999)	Element, Filter	1
	15	34357	(013228-013999)	Ftg-Hyd Str Jm16/Om12	1
	16	52142	(013228-013999)	Ftg-Hyd E90 Jm16/Om12	1
	17	84169	(013228-013999)	Clamp-Tube 2 Hole	1
	18	78750	(013228-013999)	Hose, Rbr, 1.50id 1.88od 06.0l	1

Fig. 60 - Engine Radiator Hose and Hydraulic Filter Group (014000-014999)

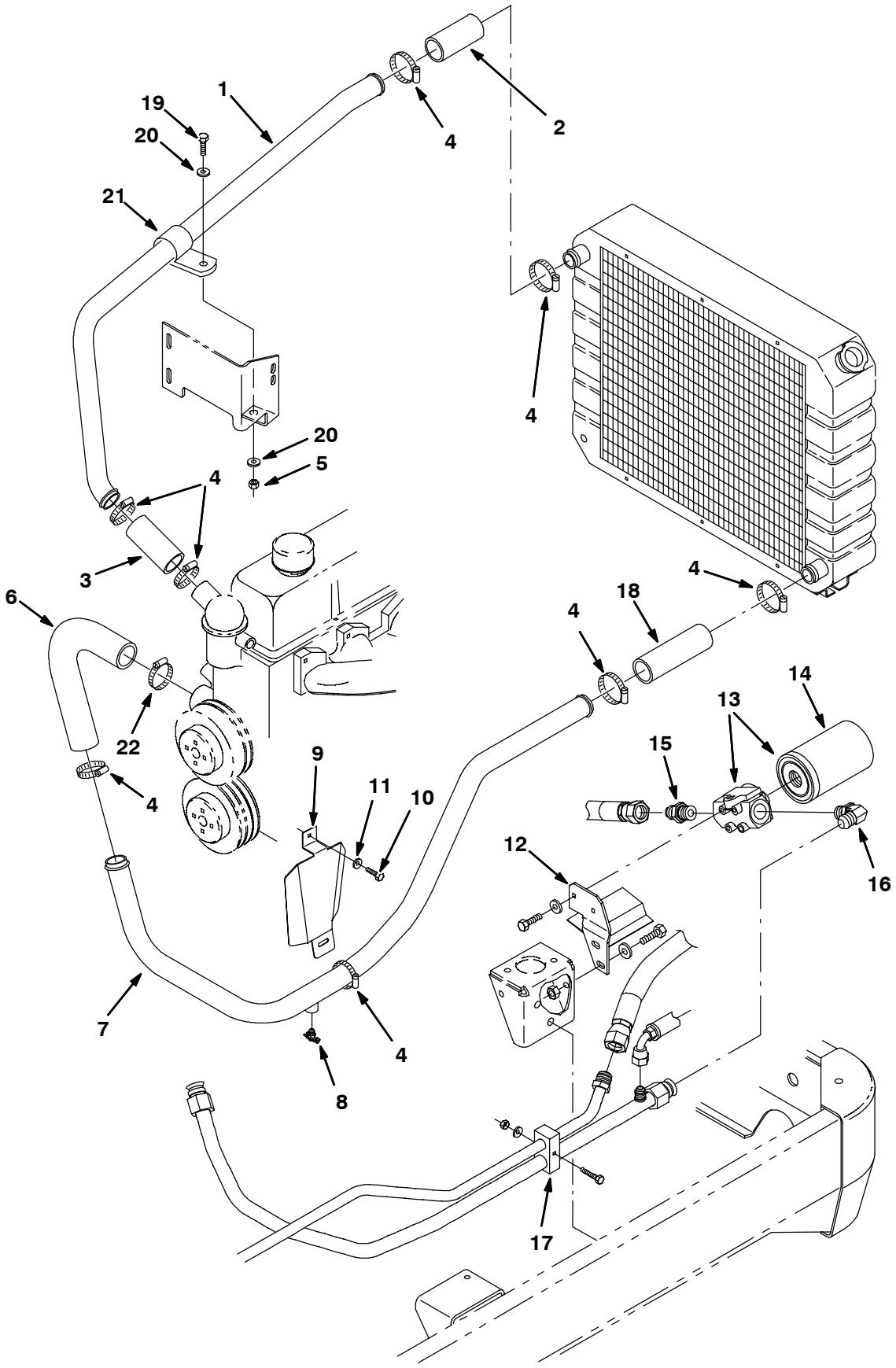

353851 - 8410, G, LP, NA

Fig. 60 - Engine Radiator Hose and Hydraulic Filter Group (014000-014999)

	Ref.	Part No.	Serial Number	Description	Qty.
	1	392584	(014000-014179)	Tube, Coolant, 1.5d Upper, Gas/Lpg	1
	1	1018644	(014180-014999)	Tube, Coolant, 1.5d Upper, Gas/Lpg	1
	2	74944	(014000-014999)	Hose, Rbr, 1.50id 1.88od 04.0l	1
	3	62378	(014000-014179)	Hose, Rbr, 1.25id 1.62od 03.0l	1
	3	62377	(014180-014999)	Hose, Rbr, 1.50id 1.88od 03.0l	1
	4	79381	(014000-014999)	Clamp Wormdrive, 1.25-2.00	8
	5	08709	(014000-014999)	Nut, Hex, Lock, M8 X 1.25, Nl	1
	6	392647	(014000-014999)	Hose, Coolant, 1.50id To 1.75id, Mold	1
	7	392583	(014000-014999)	Tube, Coolant, 1.5d W/.25npt Low,Gas/Lpg	1
	8	54911-32	(014000-014999)	Fitting, Brass Drain Cock	1
	9	9000596	(014000-014999)	Shield, Heat, W/Label	1
	10	54396	(014000-014999)	Screw, Hex, .31-18 X 0.75, 5	1
	11	32491	(014000-014999)	Washer, Flat, .31 Std	1
	12	1013438	(014000-014999)	Bracket Wldt, Fltr, Hyd	1
▽	13	10664	(014000-014999)	Filter Assy, Spin-On	1
▲	14	65221	(014000-014999)	Element, Filter	1
	15	34357	(014000-014999)	Ftg-Hyd Str Jm16/Om12	1
	16	52142	(014000-014999)	Ftg-Hyd E90 Jm16/Om12	1
	17	84169	(014000-014999)	Clamp-Tube 2 Hole	1
	18	78750	(014000-014999)	Hose, Rbr, 1.50id 1.88od 06.0l	1
	19	16931	(014000-014999)	Screw, Hex, M8 X 1.25 X 20, 8.8	1
	20	32491	(014000-014999)	Washer, Flat, 0.31 Std	2
	21	53466	(014000-014999)	Clamp, Cable, Stl, 1.50d X 1.00w, 1h	1
	22	22297	(014000-014999)	Clamp, Hose, Wormdrive, 1.56-2.50d, .50w	1

Fig. 61 - Engine Radiator Hose and Hydraulic Filter Group (015000-)

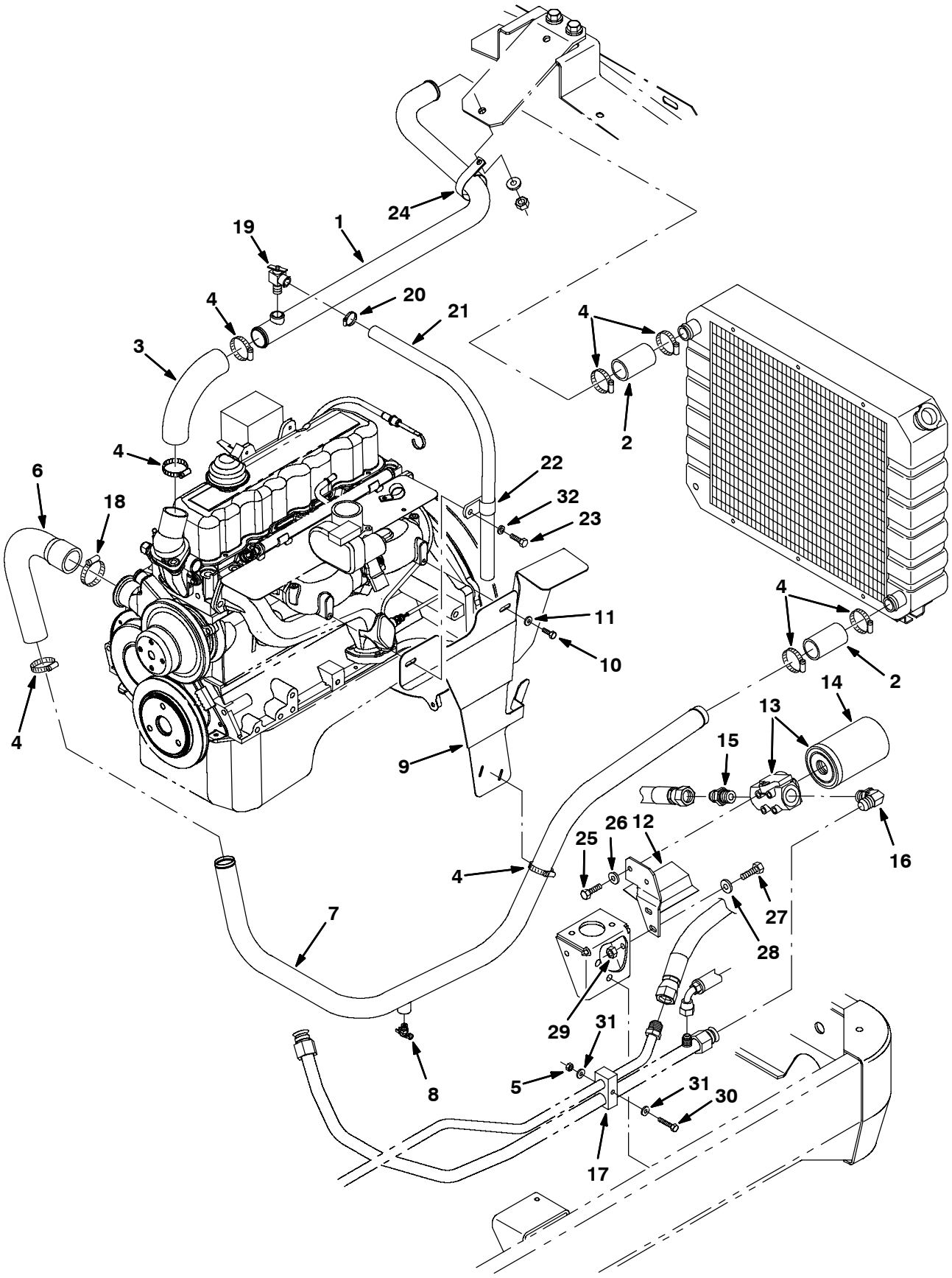

353851 - 8410, G, LP, NA

Fig. 61 - Engine Radiator Hose and Hydraulic Filter Group (015000-)

	Ref.	Part No.	Serial Number	Description	Qty.
	1	1030224	(015000-)	Tube, Radiator, Upper [8410/Lpg/Gas]	1
	2	74944	(015000-)	Hose, Rbr, 1.50id 1.88od 04.0l	2
	3	380748	(015000-)	Hose, Rbr, E90, 1.50id 1.50id 06.3 04.5	1
	4	79381	(015000-)	Clamp Wormdrive, 1.25-2.00	8
	5	08709	(015000-)	Nut, Hex, Lock, M8 X 1.25, Nl	1
	6	392647	(015000-)	Hose, Coolant, 1.50id To 1.75id, Mold	1
	7	1030143	(015000-)	Tube, Coolant, Gas/Lpg [8410 2007]	1
	8	54911-32	(015000-)	Fitting, Brass Drain Cock	1
	9	1029737	(015000-)	Shield Wldt, Heat, Manifold	1
	10	16931	(015000-)	Screw, Hex, M8 X 1.25 X 20, 8.8	1
	11	32490	(015000-)	Washer, Flat, 0.25, Std	1
	12	1013438	(015000-)	Bracket Wldt, Fltr, Hyd	1
▽	13	10664	(015000-)	Filter Assy, Spin-On	1
▲	14	65221	(015000-)	Element, Filter	1
	15	34357	(015000-)	Ftg-Hyd Str Jm16/Om12	1
	16	52142	(015000-)	Ftg-Hyd E90 Jm16/Om12	1
	17	84169	(015000-)	Clamp-Tube 2 Hole	1
	18	22297	(015000-)	Clamp, Hose, Wormdrive, 1.56-2.50d, .50w	1
	19	51305	(015000-)	Fitting, Draincock, E90, .25npt	1
	20	43844	(015000-)	Clamp, Hose, Wormdrive, 0.25-0.62d, .31w	1
	21	1006416	(015000-)	Hose, Afmkt, Pvc, Clr, 0.38id, 03ft	1
	22	67767	(015000-)	Clamp, Cable, Stl, 0.69d X 0.62w, 1hole	1
	23	06942	(015000-)	Screw, Hex, M6 X 1.0 X 16, 8.8	1
	24	70157	(015000-)	Clamp, Cable, Ss, 2.50d X 1.00w, 1hole	1
	25	21195	(015000-)	Screw, Hex, .38-16 X 0.75, G5	2
	26	32491	(015000-)	Washer, Flat, 0.31, Std	2
	27	03192	(015000-)	Screw, Hex, M10 X 1.5 X 30, 8.8	2
	28	32492	(015000-)	Washer, Flat, 0.38, Std	2
	29	07792	(015000-)	Nut, Hex, Flng, M10 X 1.50	2
	30	39278	(015000-)	Screw, Hex, M8 X 1.25 X 50, 8.8	1
	31	32485	(015000-)	Washer, Flat, 0.38, Sae	2
	32	32483	(015000-)	Washer, Flat, 0.25, Sae	1

Fig. 62 - Engine Battery Group

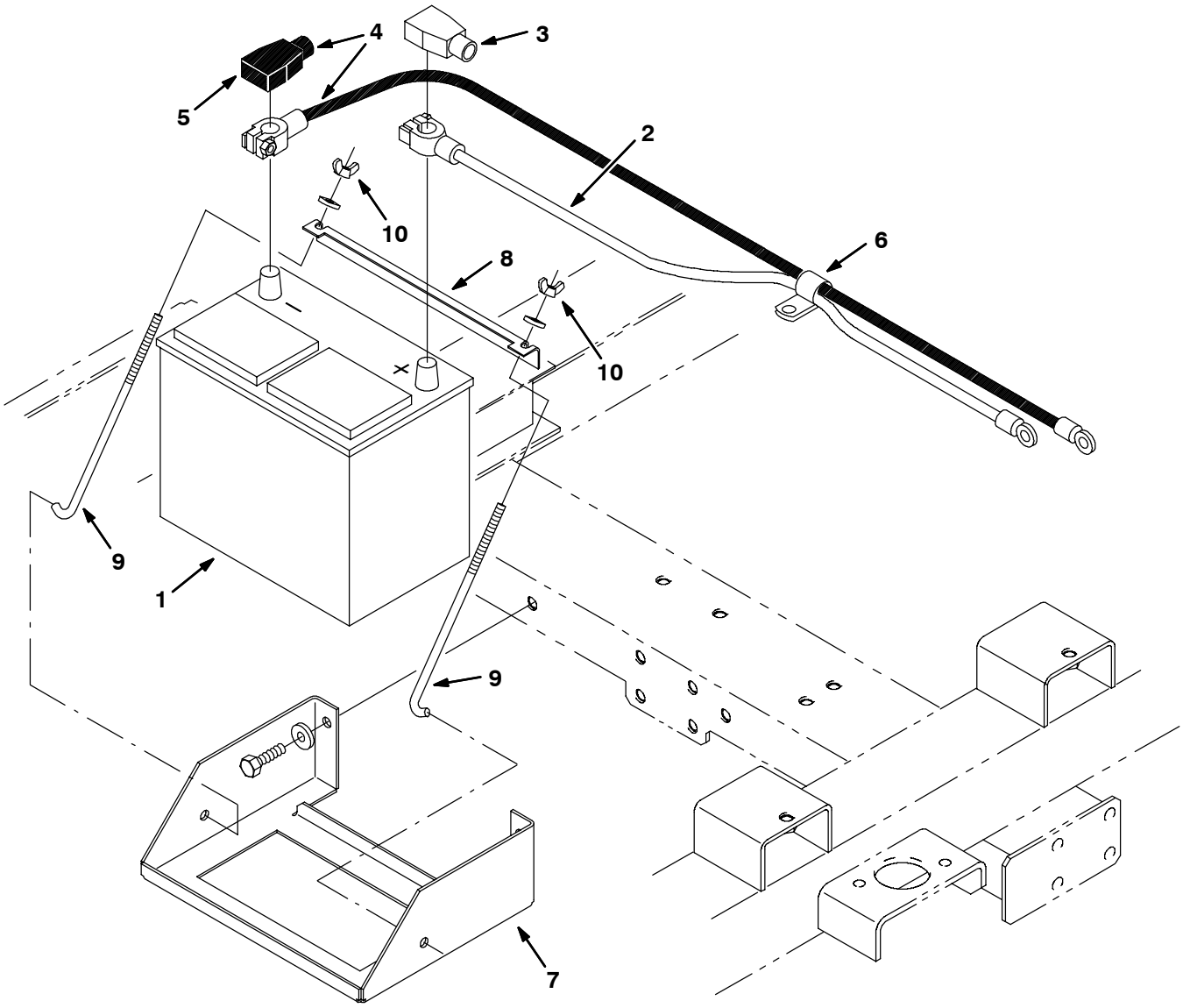

11038 - 8410, G, LP

Fig. 62 - Engine Battery Group

	Ref.	Part No.	Serial Number	Description	Qty.
	1	10137	(000000-)	Battery, 12V, Cc Amps:475 Wet	1
	2	34823	(000000-)	Cable, Batt. Term. 1-2Ga. Red	1
	3	68873	(000000-)	Boot,Batt.Term. 1-2Ga. Red	1
▽	4	60293	(000000-)	Wire, 42.0 Lg, 2Ga, Neg	1
▲	5	68872	(000000-)	Boot,Batt.Term.1-2Ga. Black	1
	6	69234	(000000-)	Clamp-Cable, 1.00Dia. .62Wth	1
	7	10606	(000000-)	Tray, Battery	1
	8	72977	(000000-)	Angle, Battery	1
	9	13015	(000000-)	Bolt,Hold Down,Battery, 7.5 Lg	2
	10	39272	(000000-)	Nut-Wing .31-18 Pltd	2

Fig. 63 - Wheel Group, Rear Drive

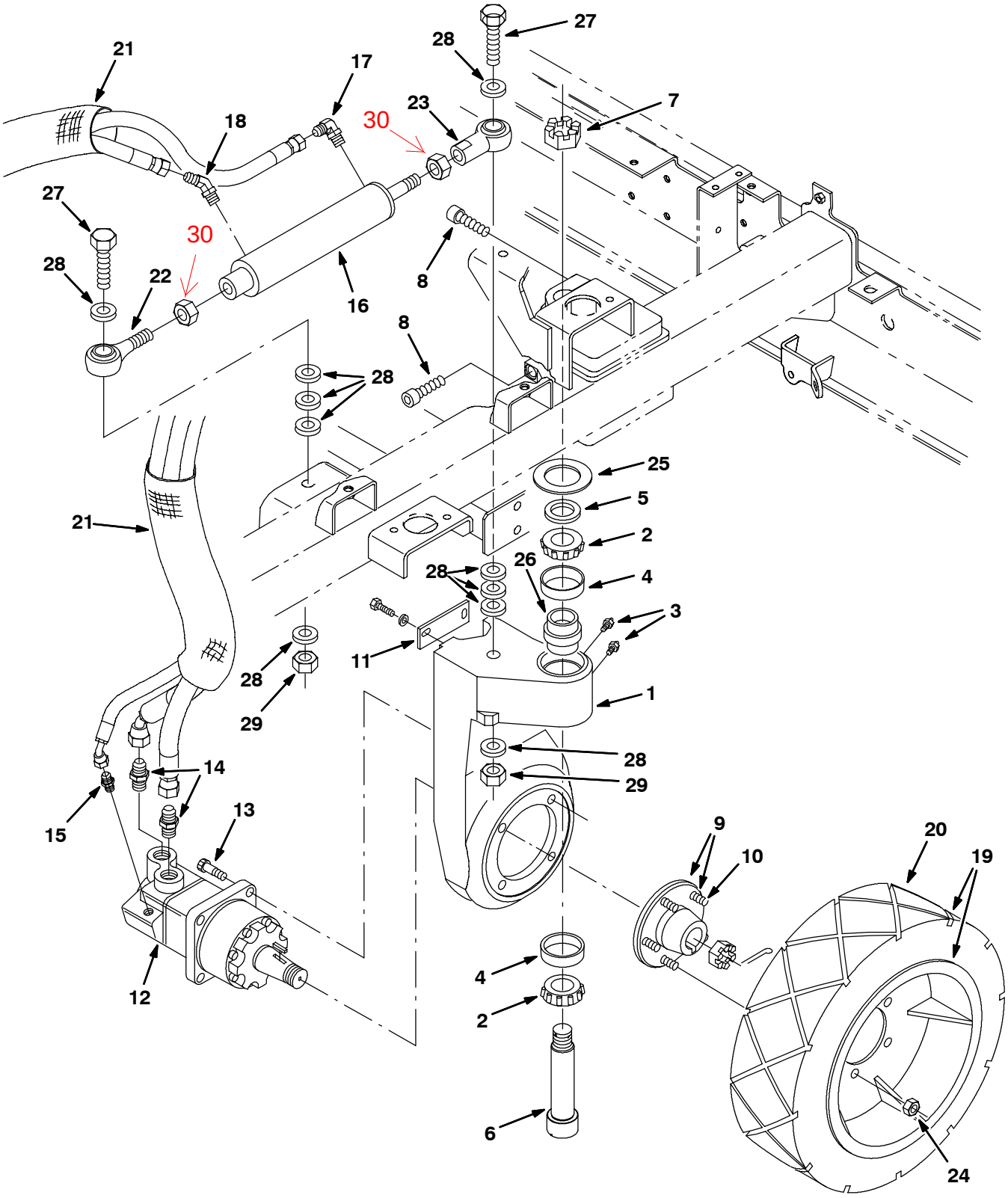

08978 - ALL

Fig. 63 - Wheel Group, Rear Drive

	Ref.	Part No.	Serial Number	Description	Qty.
	1	374565	(000000-012332)	Replm. Kit, Rear Drive Housing	1
	1	374561	(012333-)	Housing, Rear Drive Support	1
	2	51339	(000000-)	Bearing-Cone, 1.38Bore 0.71Wth	2
	3	47801	(000000-)	Ftg, Grease.25-28Th Strt .63L	3
	4	51338AM	(000000-)	Bearing-Cup , 2.56Dia 0.55Wth	2
	5	54051	(000000-)	Washer, Thrust	1
	6	73281	(000000-)	Pin, Support, Wheel, Rear	1
	7	54052	(000000-)	Nut-Hex Slot 1.12-18	1
	8	72926	(000000-)	Scr-Soc M16X2.0 50 12.9Pltd	2
▽	9	54087	(000000-)	Hub & Stud	1
▲	10	54086	(000000-)	Stud, Wheel .50-20X1.50 pLTD	5
	11	58842	(000000-)	Plate - Hose Support	1
	12	74162	(000000-012147)	Motor, Hyd Gear In 19.0 (See Breakdowns)	1
	12	22604	(012148-)	Motor, Hyd Gear In 19.0 (See Breakdowns)	1
	13	19583	(000000-)	Scr Soc .50-13X1.50	4
	14	42223	(000000-)	Ftg-Hyd Str Jm10/Om12	2
	15	55586	(000000-)	Ftg-Hyd Str Jm04/Om04	1
▽	16	53601	(000000-014376)	Cylinder, Hyd, 2.0b,15.0l, Rep.By1028492	1
▲		04483	(000000-014376)	Seal Kit, Cyl, Hyd	1
	16	1028492	(014377-)	Cylinder, Hyd, 2.0b 15.0l 08.00strk 1500	1
	17	56820	(000000-)	Ftg-Hyd E90 Jm06/Om06	1
	18	47522	(000000-)	Ftg-Hyd E45 Jm06/Om06	1
▽	19	84597	(000000-)	Tire & Wheel Assy	1
▲	20	84596	(000000-)	Tire, Solid, 18X6X12.125	1
	21	82832	(000000-)	Sleeve, Nyl	2
	22	64886	(000000-)	Balljoint, Rod End	1
	23	64887	(000000-)	Balljoint, Rod End	1
	24	24339	(000000-)	Nut Wheel .50-20 60 Angle	5
	25	374563	(012333-)	Washer 2.156B 3.50 Od .156 Felt	1
	26	374560	(012333-)	Seal, Rear Drive Grease Cavity	1
	27	77345	(000000-)	Screw, Hex, .75-10 X 3.25, G5	2
	28	39350	(000000-)	Washer, Flat, 0.75, Sae	10
	29	32987	(000000-)	Nut, Hex, Lock, .75-10, Nl	2
	30	43958	(000000-)	Nut, Hex, Std	2

Fig. 64 - Wheels and Brakes Group, Front

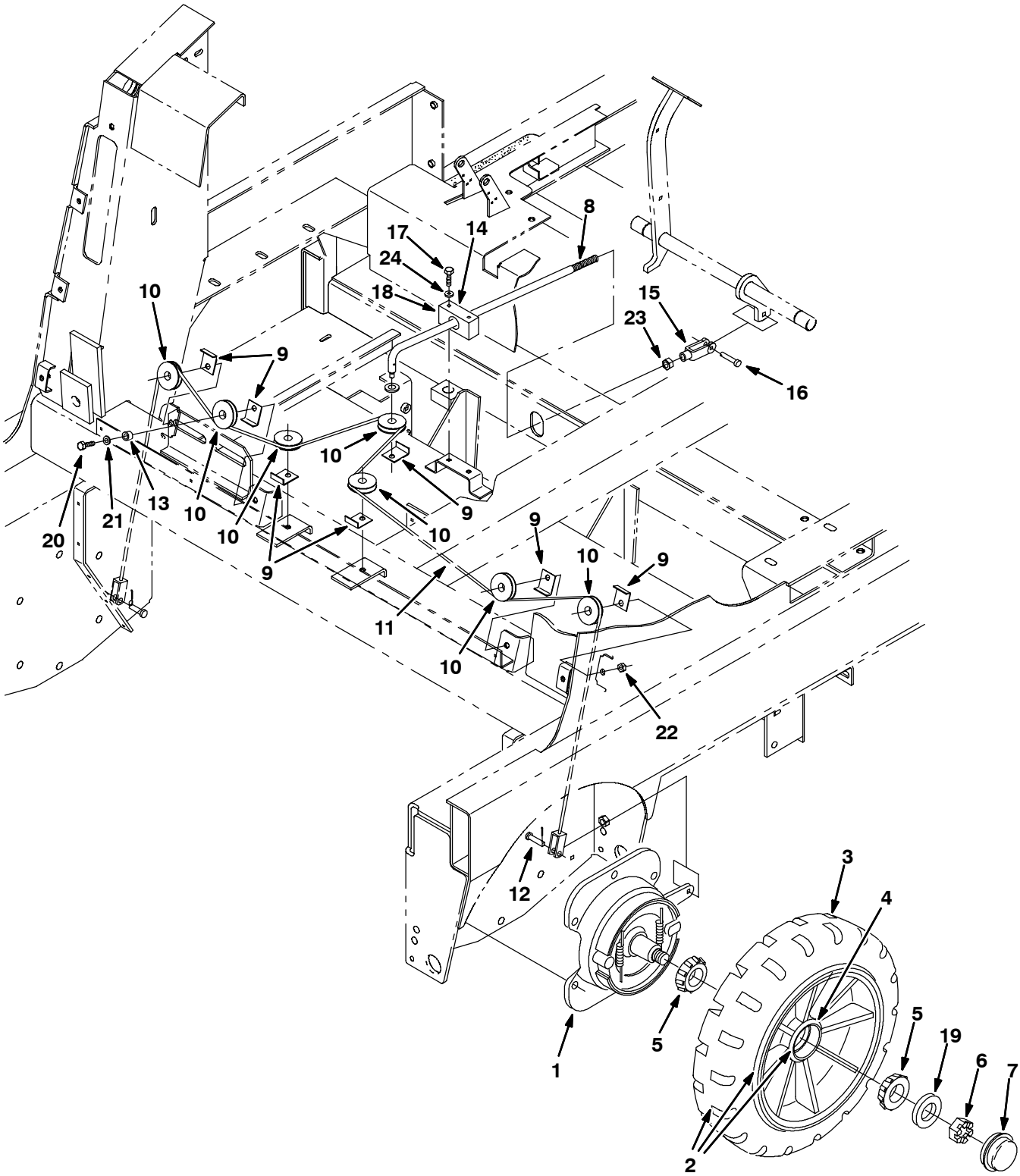

08974 - ALL

Fig. 64 - Wheels and Brakes Group, Front

	Ref.	Part No.	Serial Number	Description	Qty.
▽	1	54577	(000000-)	Brake Assy, Drum, Mech, 07.9d [6600]]	2
▲		66211	(000000-)	Shoe Set, Brake [1 Set=1pkg=2 Shoes]	2
▲▽		66213	(000000-)	Brake Kit, Repair	1
▲▲		70161	(000000-)	Shaft	1
▲		70158	(000000-)	Spring	2
▽	2	54437	(000000-)	Tire Assy, Solid, 18.0x5.0 1.56b	2
▲	3	54567	(000000-)	Tire, Solid, 18.0 X 5.0 X 12.1 [No Rim]	1
▲	4	51338AM	(000000-)	Bearing, Cup, 2.56d 0.55w	2
	5	51339	(000000-)	Bearing, Cone, 1.38b 0.71w	4
	6	14242	(000000-)	Nut, Hex, Sltd, 1.00-20	2
	7	54390	(000000-)	Cap, Hub, Dust 2.57d 0.77l	2
	8	72735	(000000-)	Rod	1
	9	54400	(000000-)	Bracket, Angle, Keeper, Cable	7
	10	369781	(000000-)	Pulley, Cable, 1.5d Nyl	7
	11	398208	(000000-)	Cable, Ss .19d 082.1l .4clevis /.4clevis	1
	12	09088	(000000-)	Pin, Clevis, 0.37d X 1.00l	2
	13	56624	(000000-)	Spacer Rep.By222460	6
	14	363215	(000000-)	Bearing, Pillowblock, 1.02b [Solid Pye]	1
	15	54467	(000000-)	Clevis, Adj, 0.38pin, M12x1.75	1
	16	86240	(000000-)	Pin, Clevis, 0.38d X 1.13l	1
	17	222504	(000000-)	Screw, Hex, M8 X 1.25 X 55, Ss	2
	18	32491	(000000-)	Washer, Flat, 0.31, Std	2
	19	32969	(000000-)	Washer, Flat, 1.00 Sae	2
	20	09023	(000000-)	Screw, Hex, M8 X 1.25 X 35, Ss, Fl	6
	21	39349	(000000-)	Washer, Flat, 0.31 Sae	6
	22	08713	(000000-)	Nut, Hex, Lock, M8 X 1.25, Nl, Ss	2
	23	39313	(000000-)	Nut, Hex, Std, M12 X 1.75	1
	24	32490	(000000-)	Washer, Flat, 0.25 Std	2

Fig. 65 - Brake Pedals Group

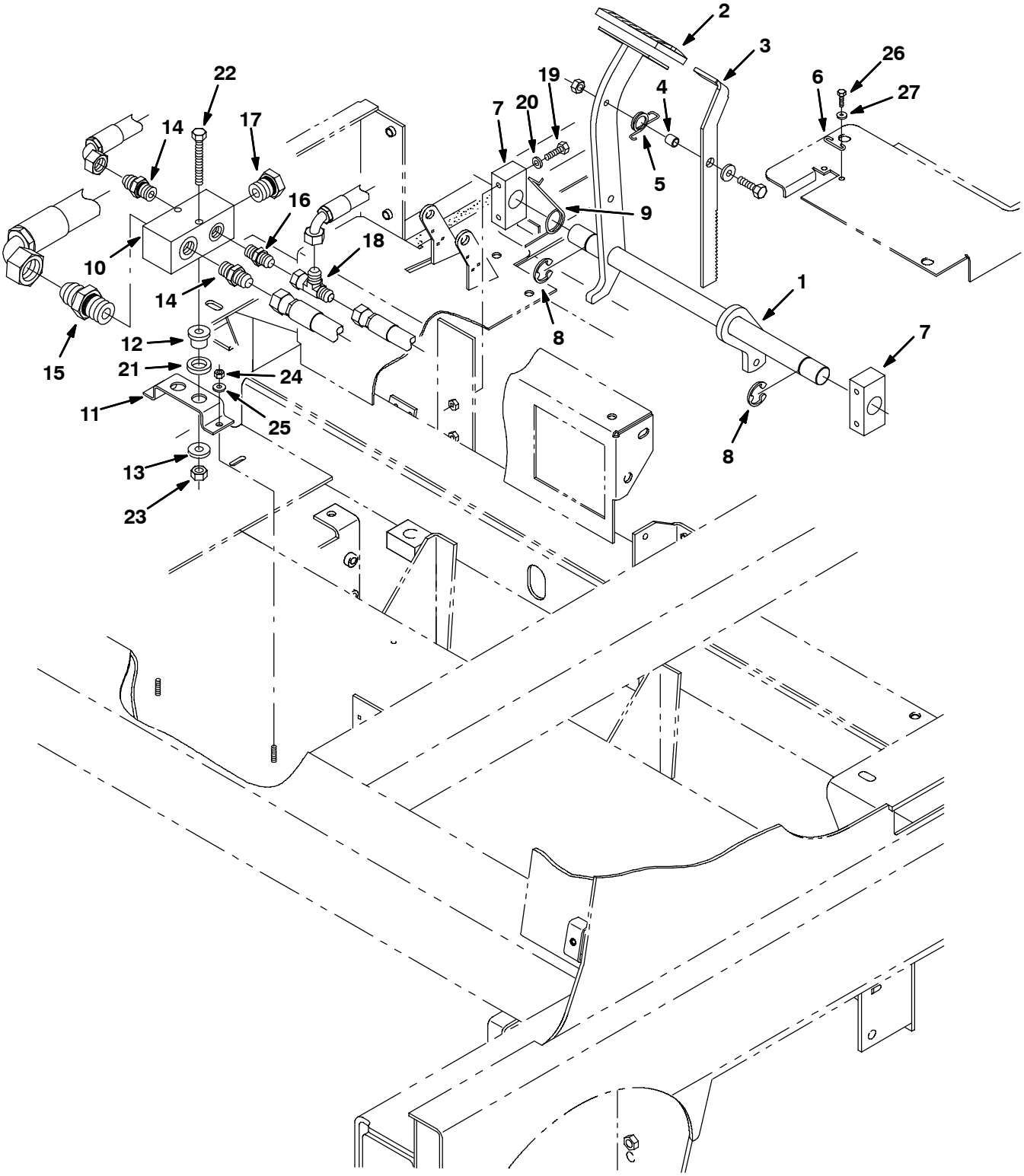

10997 - ALL

Fig. 65 - Brake Pedals Group

Ref.	Part No.	Serial Number	Description	Qty.
1	22727	(000000-)	Shaft Wldt, Brake	1
2	51109	(000000-)	Pad	1
3	22731	(000000-)	Pedal, Brake Lock	1
4	46563	(000000-)	Bshg,Sleeve,0.37Bx0.50Odx0.50L	1
5	59009	(000000-)	Spring, Tors 0.75D 1.00L .060W	1
6	97031	(000000-)	Spring, Parking Brake	1
7	363215	(000000-)	Bearing, Brake	2
8	23788	(000000-)	Ring,Retain,Ex,0.98Od,E-Ring	2
9	54607	(000000-)	Spring, Torsion	1
10	73108	(000000-)	Manifold, Hyd Collector	1
11	10740	(000000-)	Bracket, Support	1
12	54274	(000000-)	Isolator-Vibration,125Lb.Ratng	2
13	13248	(000000-)	Washer .400B 1.12D .12Cr Znc	2
14	44869	(000000-)	Ftg-Hyd Str Jm08/Om08	2
15	67310	(000000-)	Fitting-Hyd Str	1
16	55685	(000000-)	Ftg-Hyd Str Jm04/Om06	1
17	33817	(000000-)	Ftg-Hyd Plg Om12	1
18	57988	(000000-)	Ftg-Hyd Tee Jm04Jmjf	1
19	222504	(000000-)	Scr Hex Ssm M8X55	4
20	32491	(000000-)	Washer Flat .31	4
21	39350	(000000-)	Washer Flat .75	2
22	06958	(000000-)	Screw, Hex, M8 X 1.25 X 80, 8.8	2
23	08709	(000000-)	Nut, Hex, Lock, M8 X 1.25, Nl	2
24	08708	(000000-)	Nut, Hex, Lock, M6 X 1.0, Nl	2
25	19066	(000000-)	Washer, Flat, #10	2
26	09738	(000000-)	Screw, Hex, M5 X 0.8 X 12, Ss	2
27	01683	(000000-)	Washer, Flat, #10, Ss	2

Fig. 66 - Directional Control Group (000000-013227)

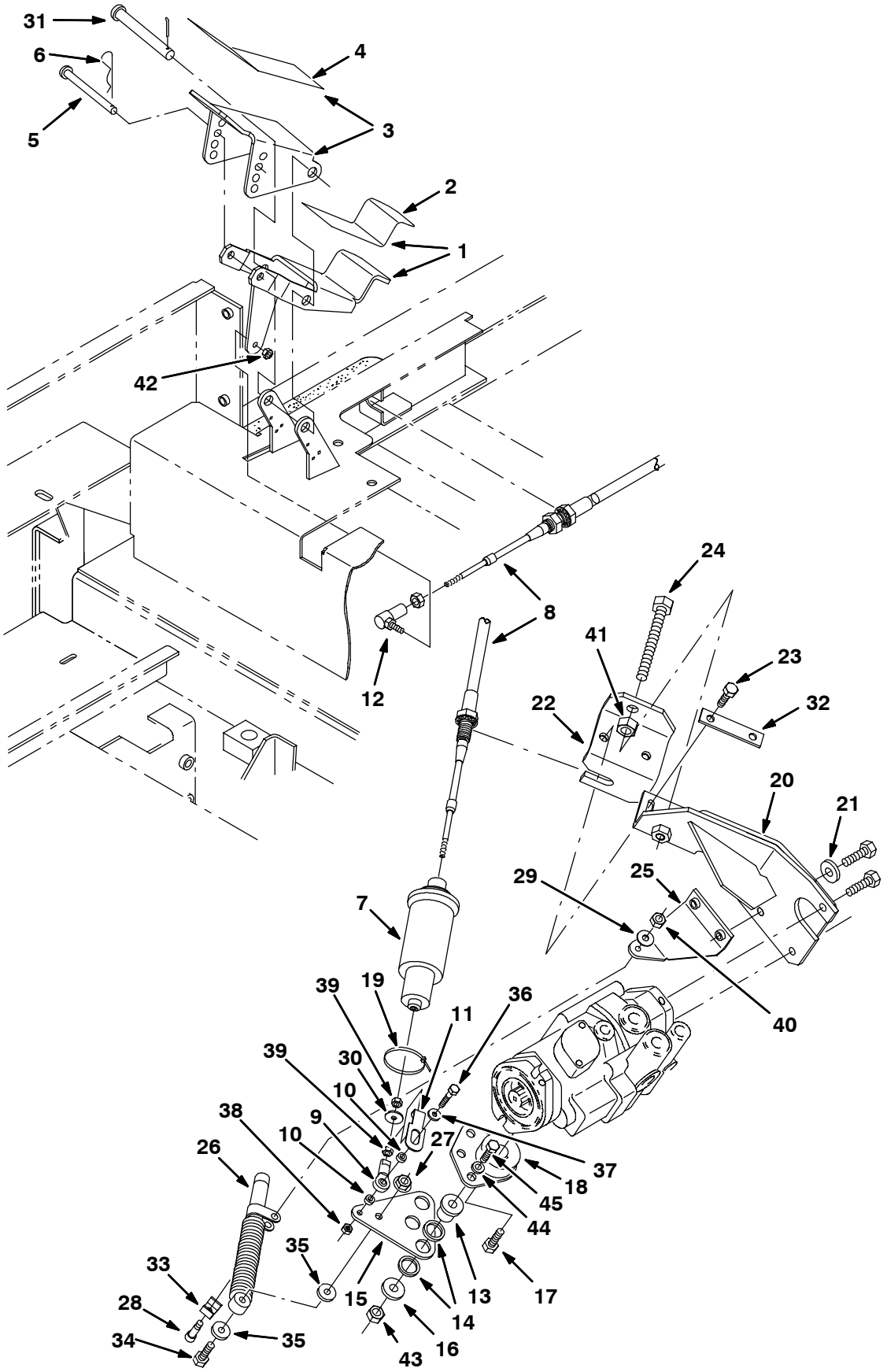

10991 - ALL

Fig. 66 - Directional Control Group (000000-013227)

	Ref.	Part No.	Serial Number	Description	Qty.
▽	1	84102	(000000-013227)	Pedal, Propel, Lower W/Tread	1
▲	2	82839	(000000-013227)	Pad, Tread	1
▽	3	84103	(000000-013227)	Pedal, Propel, Upper W/Tread	1
▲	4	82839	(000000-013227)	Pad, Tread	1
	5	59672	(000000-013227)	Pin, Clevis .31 Dia X 4.50 Lg	1
	6	97163	(000000-013227)	Pin, Hair Cotter 13D 3 Wire	1
	7	63292	(000000-013227)	Spring, Propel, Centering	1
	8	10539	(000000-013227)	Replm Kit, Propel Cable	1
	9	68866	(000000-013227)	Rod End .250-28 .25Dia	1
	10	65441	(000000-013227)	Spacer, .259Id 375Od .250Lg	2
	11	83887	(000000-013227)	Bracket, Safety Clip	1
	12	14601	(000000-013227)	Ball Joint, 250-28	1
	13	54274	(000000-013227)	Isolator-Vibration,125Lb.Ratng	3
	14	09832	(000000-013227)	Washer, .812B 1.06D .06Cr.	6
	15	83894	(000000-013227)	Arm, Propel, Lower 8410	1
	16	13248	(000000-013227)	Washer .400B 1.12D .12Cr Znc	3
	17	83879	(000000-013227)	Scr-Hex .31-24X0.75 Nylon Loc	1
	18	83892	(000000-013227)	Arm Wldt, Propel 8410	1
	19	49266	(000000-013227)	Tie, Cable 1.75D Max 7.50Lg	1
	20	83989	(000000-013227)	Bracket, Wldt, Propel Adj.	1
	21	41187	(000000-013227)	Washer-Belleville .3 Pltd	1
	22	83897	(000000-013227)	Bracket, Propel Adj. Guide	1
	23	12333	(000000-013227)	Scr-Hexssm 8X1.25 25 Nylnloc	2
	24	84036	(000000-013227)	Scr-Hex M12X1.75 110 Full Thd	1
	25	73423	(000000-013227)	Bracket, Shock	1
	26	73411	(000000-013227)	Shock Absorber	1
	27	08713	(000000-013227)	Nut-Hxlocnyln M 8X1.25 Reg Ss	1
	28	16213	(000000-013227)	Scr-Shld .312Dx1.00L .25-20	1
	29	01685	(000000-013227)	Washer Flt .31 Ss	1
	30	78785	(000000-013227)	Washer, .250b .88D .06Neopre	1
	31	59668	(000000-013227)	Pin, Clevis .50 Dia X 4.50 Lg	1
	32	83703	(000000-013227)	Strip, .12 .8w3 .3l2 .38dia 2.25ctr	1
	33	84170	(000000-013227)	Bracket, Retainer	1
	34	09023	(000000-013227)	Screw, Hex, M8 X 1.25 X 35, Ss, Fl	1
	35	01685	(000000-013227)	Washer, Flat, 0.31 Ss	2
	36	25049	(000000-013227)	Screw, Hex, .25-20 X 1.75, 5	1
	37	32483	(000000-013227)	Washer, Flat, 0.25 Sae	1
	38	32981	(000000-013227)	Nut, Hex, Lock, .25-20, Nl	1
	39	01714	(000000-013227)	Nut, Hex, Std, .25-28	2
	40	75934	(000000-013227)	Nut, Hex, Lock, .25-20, Nl	1
	41	08711	(000000-013227)	Nut, Hex, Lock, M12 X 1.75,Nl	1
	42	13513	(000000-013227)	Nut, Hex, Lock, .25-28, Nl	1
	43	41430	(000000-013227)	Nut, Hex, Lock, M10 X 1.5, Nl	3
	44	32492	(000000-013227)	Washer, Flat, 0.38 Std	3
	45	39285	(000000-013227)	Screw, Hex, M10 X 1.5 X 40, 8.8	3

Fig. 67 - Directional Control Group (013228-)

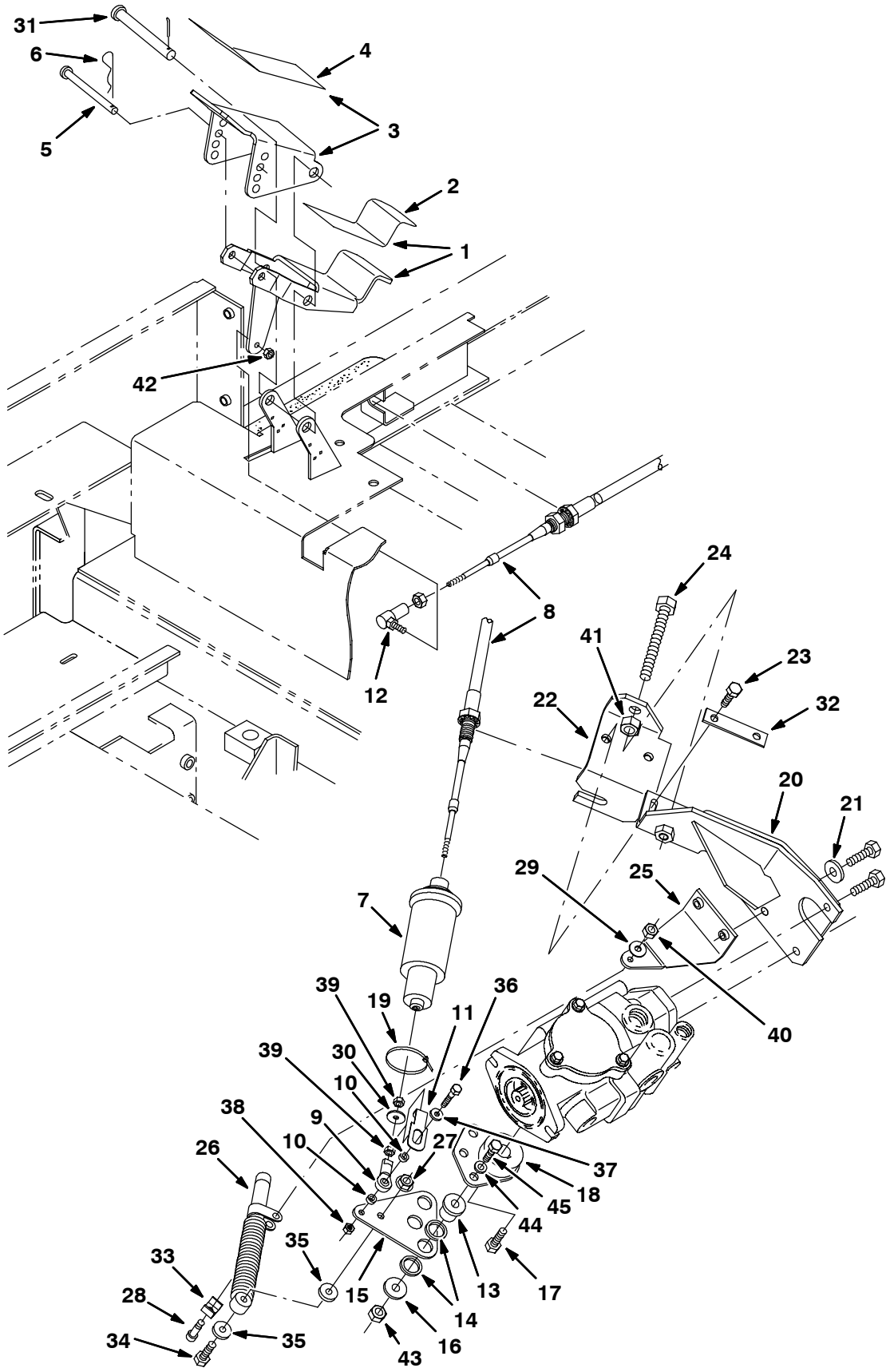

353852 - ALL

Fig. 67 - Directional Control Group (013228-)

	Ref.	Part No.	Serial Number	Description	Qty.
▽	1	84102	(013228-)	Pedal, Propel, Lower W/Tread	1
▲	2	82839	(013228-)	Pad, Tread	1
▽	3	84103	(013228-)	Pedal, Propel, Upper W/Tread	1
▲	4	82839	(013228-)	Pad, Tread	1
	5	59672	(013228-)	Pin, Clevis .31 Dia X 4.50 Lg	1
	6	97163	(013228-)	Pin, Hair Cotter 13D 3 Wire	1
	7	63292	(013228-)	Spring, Propel, Centering	1
	8	10539	(013228-)	Replm Kit, Propel Cable	1
	9	68866	(013228-)	Rod End .250-28 .25Dia	1
	10	65441	(013228-)	Spacer, .259Id 375Od .250Lg	2
	11	83887	(013228-)	Bracket, Safety Clip	1
	12	14601	(013228-)	Ball Joint, 250-28	1
	13	54274	(013228-)	Isolator-Vibration,125Lb.Ratng	3
	14	09832	(013228-)	Washer, .812B 1.06D .06Cr.	6
	15	83894	(013228-)	Arm, Propel, Lower 8410	1
	16	13248	(013228-)	Washer .400B 1.12D .12Cr Znc	3
	17	83879	(013228-)	Scr-Hex .31-24X0.75 Nylon Loc	1
	18	83892	(013228-)	Arm Wldt, Propel 8410	1
	19	49266	(013228-)	Tie, Cable 1.75D Max 7.50Lg	1
	20	83989	(013228-)	Bracket, Wldt, Propel Adj.	1
	21	41187	(013228-)	Washer-Belleville .3 Pltd	1
	22	83897	(013228-)	Bracket, Propel Adj. Guide	1
	23	12333	(013228-)	Scr-Hexssm 8X1.25 25 Nylnloc	2
	24	84036	(013228-)	Scr-Hex M12X1.75 110 Full Thd	1
	25	392600	(013228-)	Bracket, Shock	1
	26	73411	(013228-)	Shock Absorber	1
	27	08713	(013228-)	Nut-Hxlocnyln M 8X1.25 Reg Ss	1
	28	16213	(013228-)	Scr-Shld .312Dx1.00L .25-20	1
	29	01685	(013228-)	Washer Flt .31 Ss	1
	30	78785	(013228-)	Washer, .250b .88D .06Neopre	1
	31	59668	(013228-)	Pin, Clevis .50 Dia X 4.50 Lg	1
	32	83703	(013228-)	Strip, .12 .8w3 .3l2 .38dia 2.25ctr	1
	33	84170	(013228-)	Bracket, Retainer	1
	34	09023	(013228-)	Screw, Hex, M8 X 1.25 X 35, Ss, Fl	1
	35	01685	(013228-)	Washer, Flat, 0.31 Ss	2
	36	25049	(013228-)	Screw, Hex, .25-20 X 1.75, 5	1
	37	32483	(013228-)	Washer, Flat, 0.25 Sae	1
	38	32981	(013228-)	Nut, Hex, Lock, .25-20, Nl	1
	39	01714	(013228-)	Nut, Hex, Std, .25-28	2
	40	75934	(013228-)	Nut, Hex, Lock, .25-20, Nl	1
	41	08711	(013228-)	Nut, Hex, Lock, M12 X 1.75,Nl	1
	42	13513	(013228-)	Nut, Hex, Lock, .25-28, Nl	1
	43	41430	(013228-)	Nut, Hex, Lock, M10 X 1.5, Nl	3
	44	32492	(013228-)	Washer, Flat, 0.38 Std	3
	45	39285	(013228-)	Screw, Hex, M10 X 1.5 X 40, 8.8	3

Fig. 68 - Hydraulic Pumps Group (000000-013227)

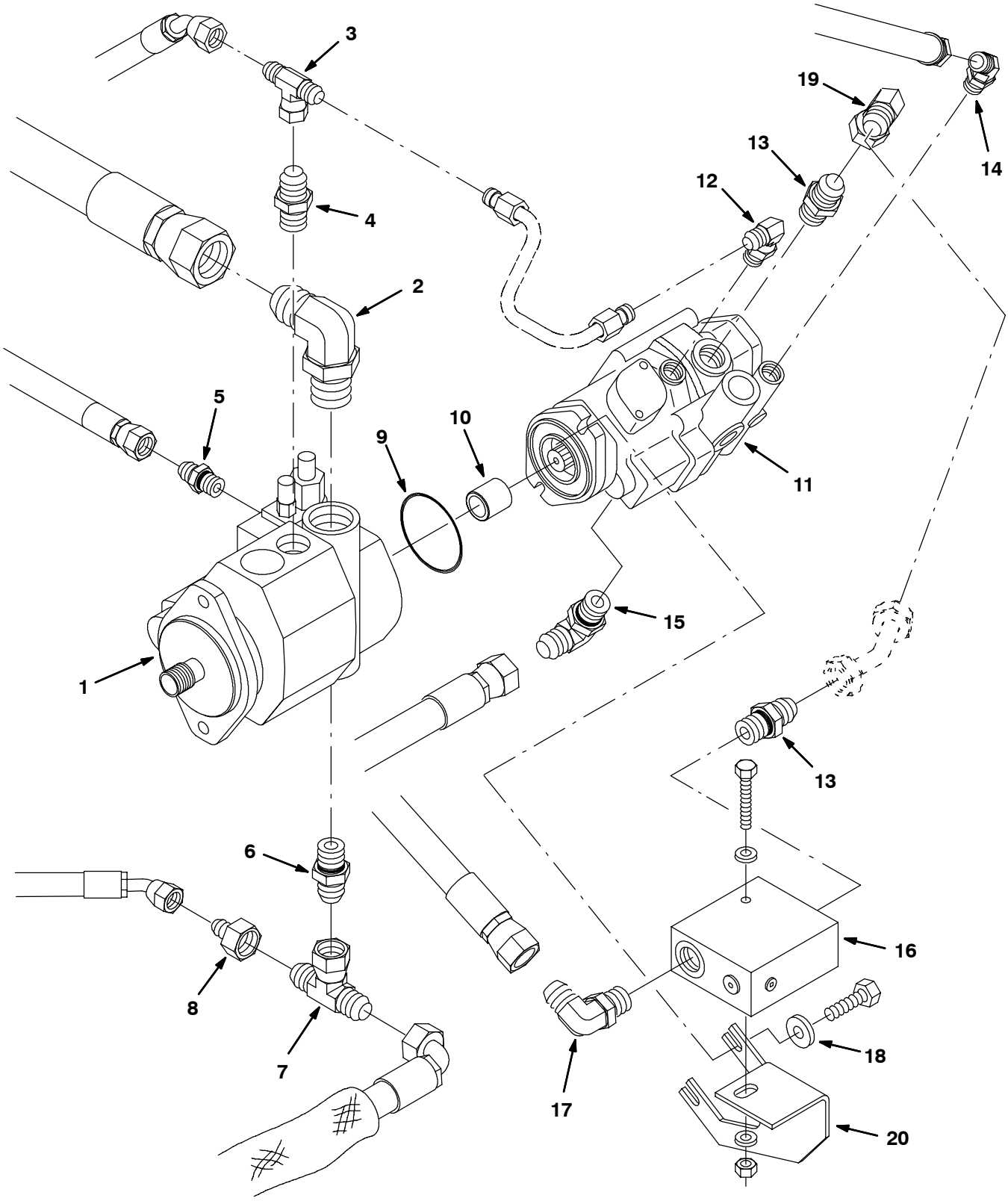

11063 - ALL

Fig. 68 - Hydraulic Pumps Group (000000-013227)

Ref.	Part No.	Serial Number	Description	Qty.
1	73101	(000000-013227)	Pump, Hyd Piston L 2.77 R 2500 (See Breakdowns)	1
2	73109	(000000-013227)	Fitting-Hyd	1
3	76315	(000000-013227)	Ftg-Hyd Tee Jm08Jfjm	1
4	56835	(000000-013227)	Ftg-Hyd Str Jm08/Om06	1
5	50960	(000000-013227)	Ftg-Hyd Str Jm06/Om04	1
6	67310	(000000-013227)	Fitting-Hyd Str	1
7	62389	(000000-013227)	Ftg-Hyd Tee Jm12Jfjm	1
8	78143	(000000-013227)	Ftg-Hyd Str Jm08/Jf12	1
9	65145-1	(000000-013227)	O-Ring Gland	1
10	73111	(000000-013227)	Coupler	1
11	79770	(000000-013227)	Pump, Hyd Piston V 1.24 R 4000 (See Breakdowns)	1
12	42213	(000000-013227)	Ftg-Hyd E90 Jm08/Om06	1
13	42223	(000000-013227)	Ftg-Hyd Str Jm10/Om12	2
14	42226	(000000-013227)	Ftg-Hyd E45 Jm08/Om08	1
15	53076	(000000-013227)	Ftg-Hyd E90 Jm10/Om12	1
16	73430	(000000-013227)	Switch, Hyd Flow Sensor (See Breakdowns)	1
17	53076	(000000-013227)	Ftg-Hyd E90 Jm10/Om12	1
18	41187	(000000-013227)	Washer-Bellville .38 Pltd	2
19	54194	(000000-013227)	Ftg-Hyd E90 Jm10/Jf10	1
20	77239	(000000-013227)	Bracket, Mounting, Flow Switch	1

Fig. 69 - Hydraulic Pumps Group (013228-)

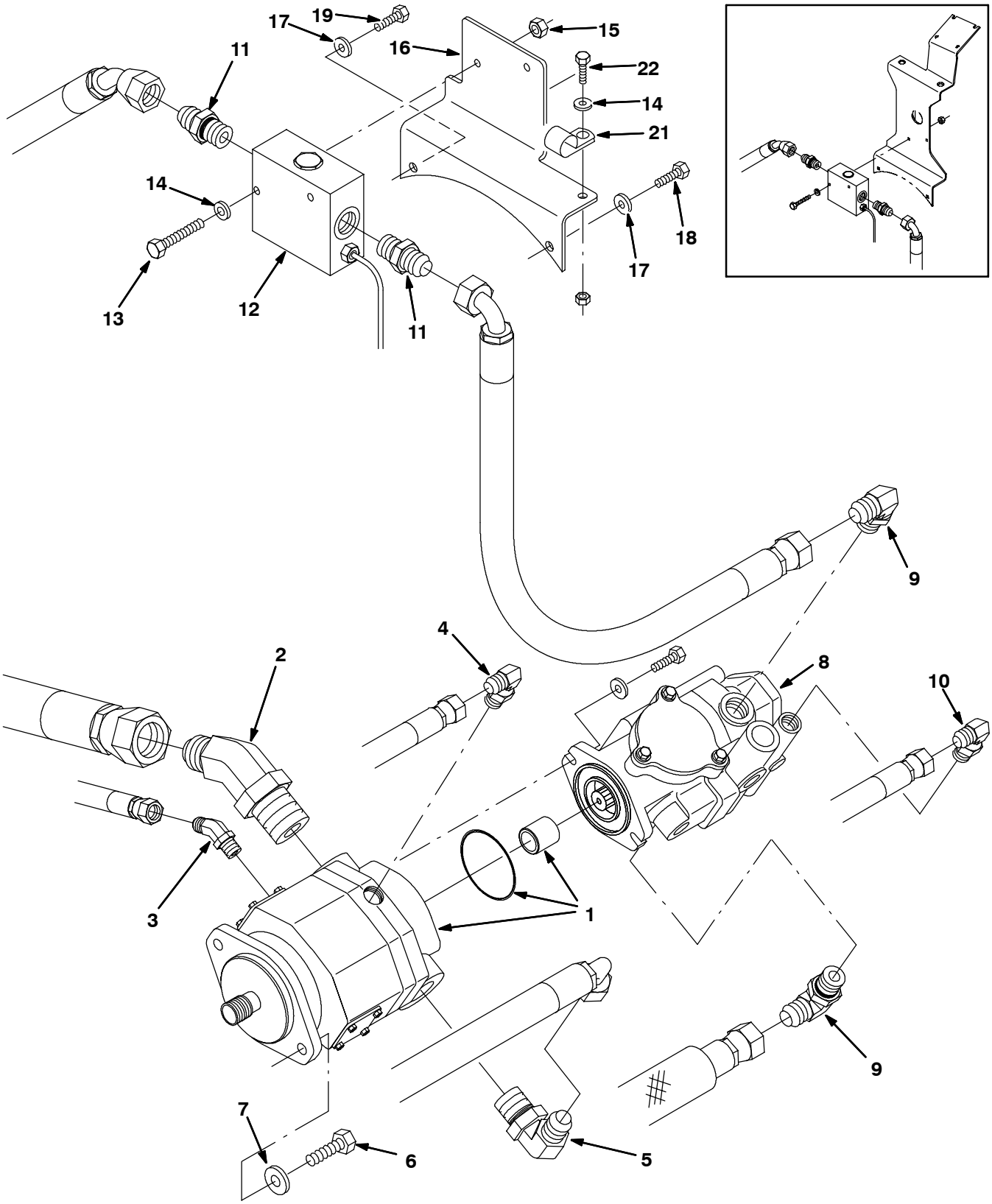

353853 - G, LP

Fig. 69 - Hydraulic Pumps Group (013228-)

Ref.	Part No.	Serial Number	Description	Qty.
1	373486	(013228-)	Pump, Hyd, Piston [L] 2.75 [R] 2500 (See Breakdown)	1
2	392604	(013228-)	Fitting, Hyd, E45, Jm20 /Om24	1
3	392609	(013228-)	Fitting, Hyd, E45, Jm06 /Om04	1
4	56821	(013228-)	Fitting, Hyd, E90, Jm08/Om10	1
5	52911	(013228-)	Fitting, Hyd, E90, Jm12/Om16	1
6	39810	(013228-)	Screw, Hex, .50-13 X 1.25, 5	2
7	32486	(013228-)	Washer, Flat, .50 Sae	2
8	373485	(013228-)	Pump, Hyd, Piston [V] 1.24 [R] 4000 (See Breakdown)	1
9	53076	(013228-)	Fitting, Hyd, E90, Jm10/Om12	2
10	44868	(013228-)	Fitting, Hyd, E90, Jm08/Om08	1
11	42223	(013228-)	Fitting, Hyd, Str, Jm10/Om12	2
12	73430	(013228-)	Switch	1
13	39279	(013228-)	Screw, Hex, M08 X 1.25 X 70, 8.8	2
14	32491	(013228-)	Washer, Flat, .31 Std	2
15	08709	(013228-)	Nut, Hex, Lock, M08 X 1.25,Nl	2
16	1013699	(014000-)	Bracket, Mtg, Hyd Valve	1
17	32492	(014000-)	Washer, Flat, 0.38 Std	2
18	27989	(014000-)	Screw, Hex, .38-16 X 1.75, 5	1
19	21198	(014000-)	Screw, Hex, .38-16 X 1.25, 5	1
20	1015036	(014000-)	Hose, Sleeve, Fire	1
21	58366	(014000-)	Clamp, Cable, Stl, 1.25d X 1.00w, 1h	1
22	16931	(014000-)	Screw, Hex, M8 X 1.25 X 20, 8.8	1
23	21198	(014000-)	Screw, Hex, .38-16 X 1.25, 5	2
24	32485	(014000-)	Washer, Flat, 0.38 Sae	2

Fig. 70 - Hydraulic Schematic

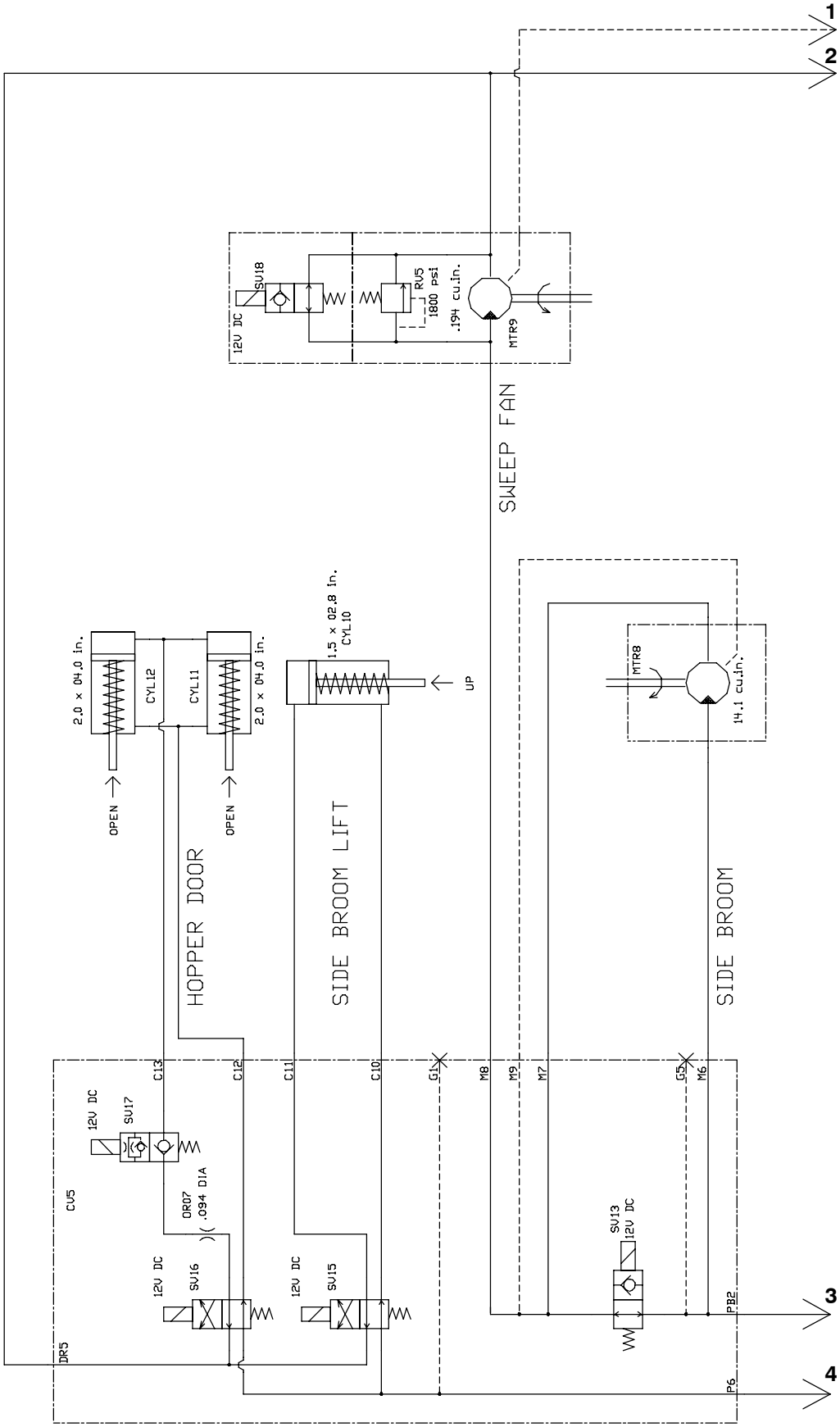

Fig. 70 - Hydraulic Schematic

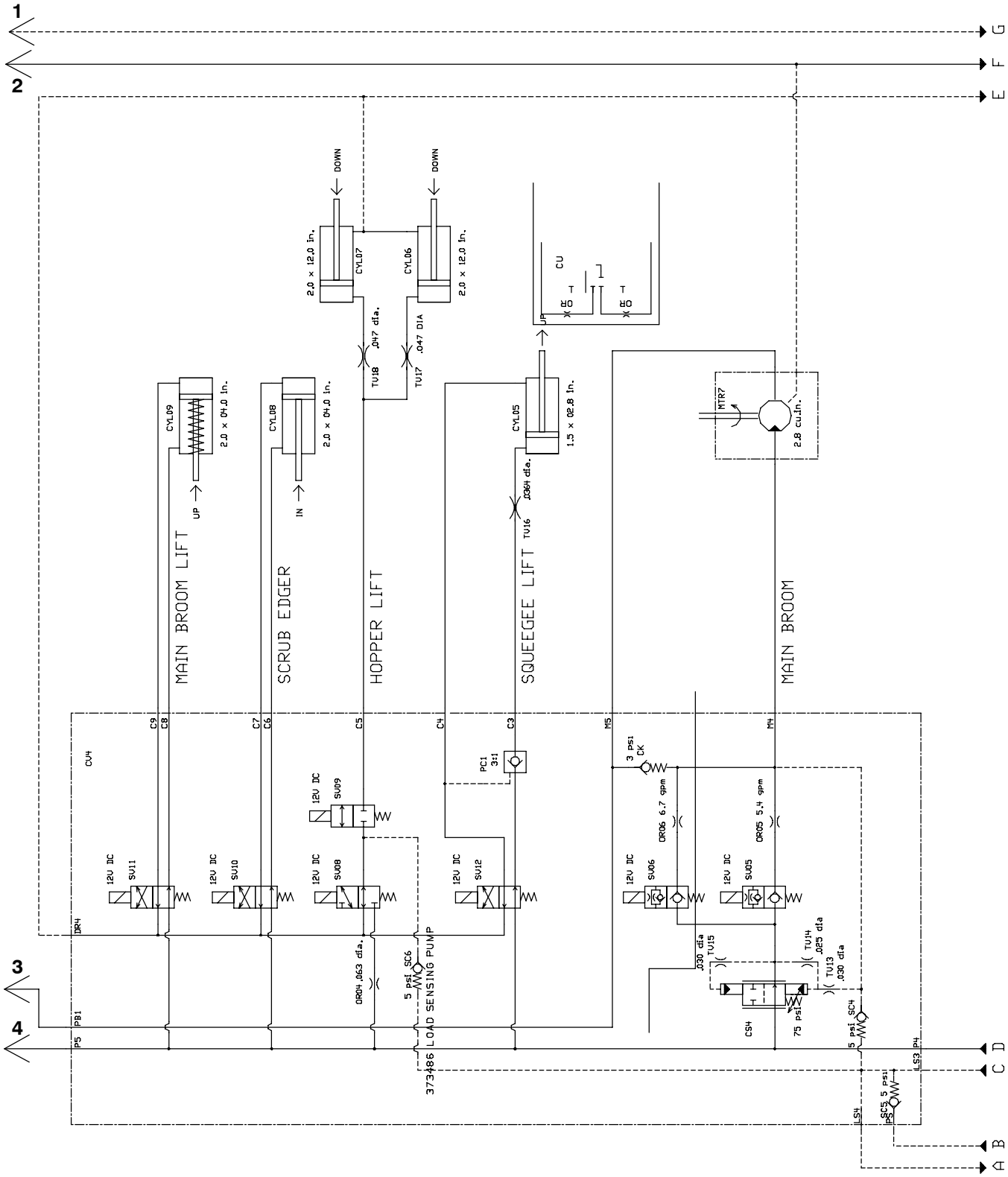

Fig. 70 - Hydraulic Schematic

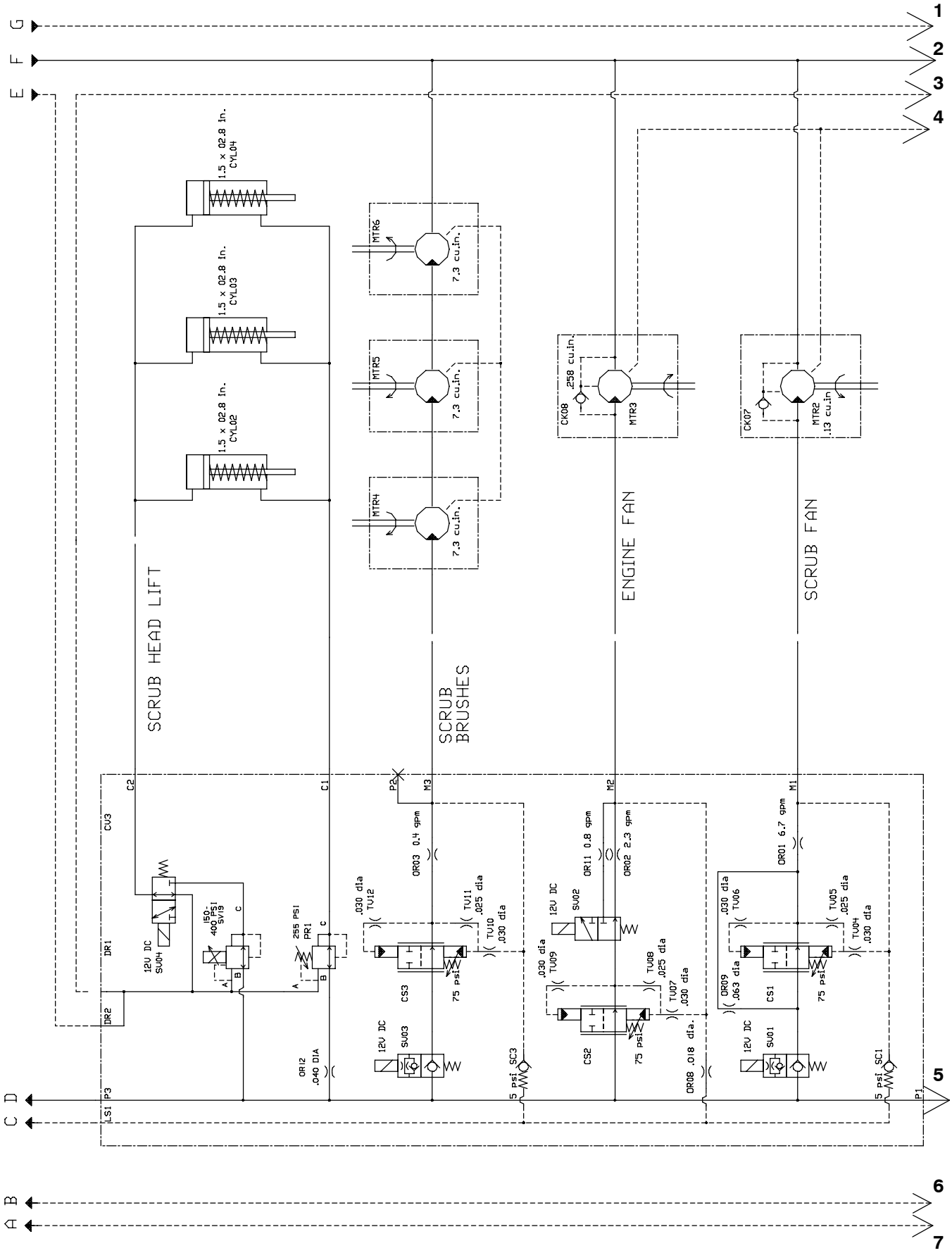

Fig. 70 - Hydraulic Schematic

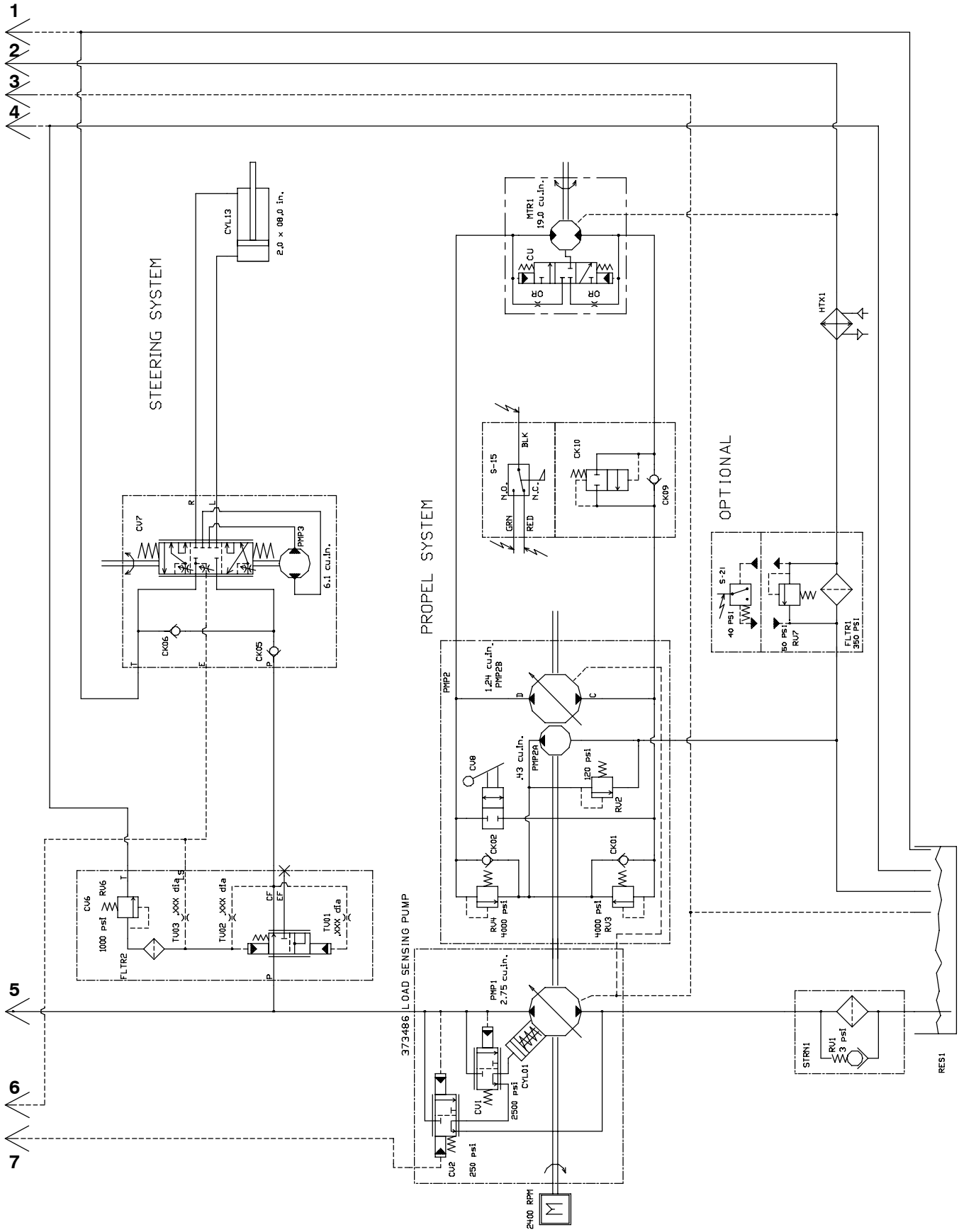

Fig. 71 - Hydraulic Hose Group (000000-013227)

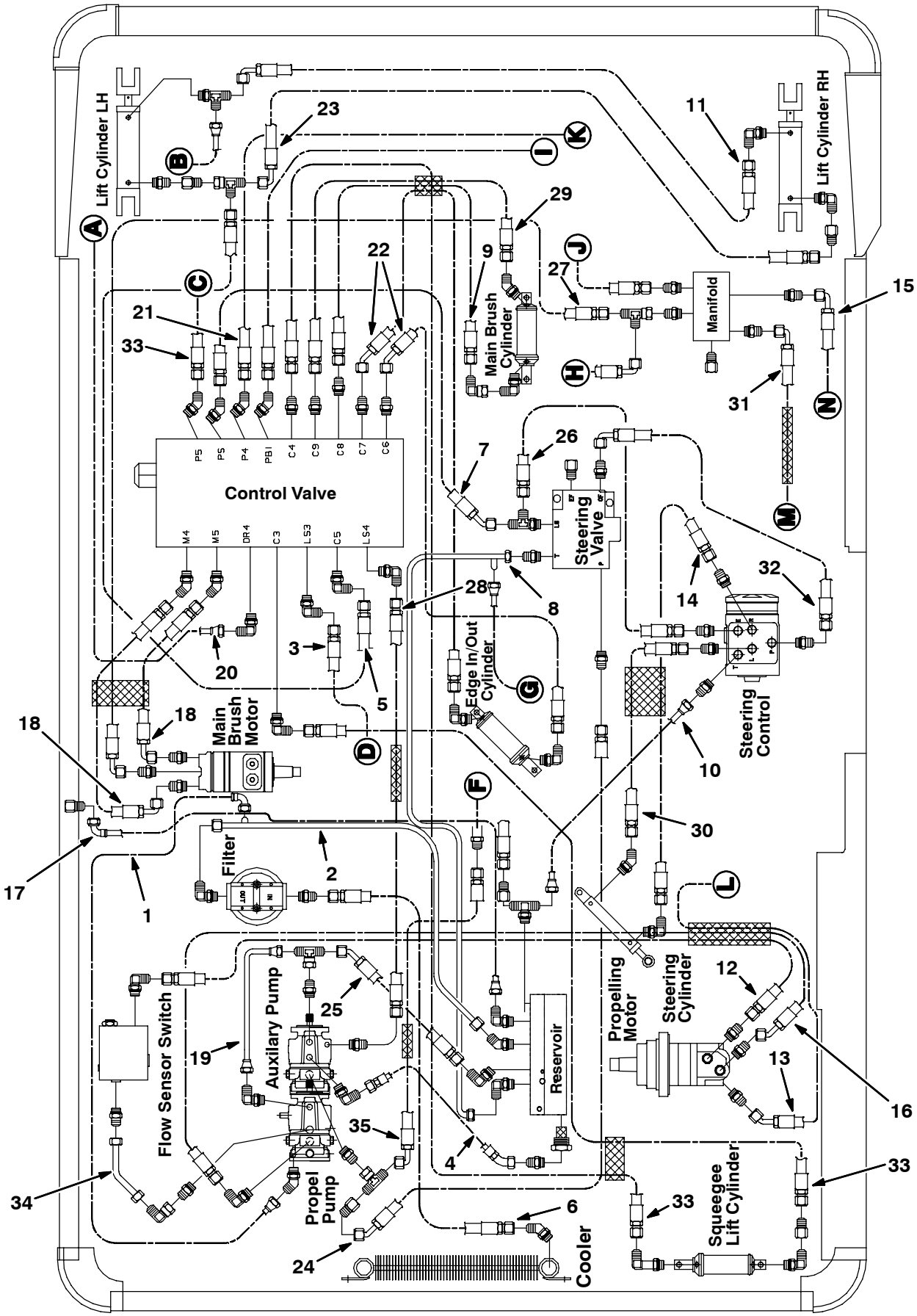

11089 - ALL

Fig. 71 - Hydraulic Hose Group (000000-013227)

Ref.	Part No.	Serial Number	Description	Qty.
1	78811	(000000–012574)	Hose, Hyd	1
1	57971	(012575–013227)	Hose, Hyd	1
2	77316	(000000–012574)	Hose, Hyd	1
2	84147	(012575–013227)	Tube, Hyd 16 Jf16/Jf16	1
3	77307	(000000–013227)	Hose, Hyd	1
4	77312	(000000–013227)	Hose, Hyd	1
5	77308	(000000–013227)	Hose, Hyd	1
6	78777	(000000–013227)	Hose, Hyd	1
7	77305	(000000–013227)	Hose, Hyd	1
8	77309	(000000–012512)	Hose, Hyd	1
8	84145	(012513–013227)	Tube, Hyd 06 Jf06/Jf06	1
9	77306	(000000–013227)	Hose, Hyd	1
10	76762	(000000–013227)	Hose, Hyd	1
11	77303	(000000–013227)	Hose, Hyd	1
12	77314	(000000–013227)	Hose, Hyd	1
13	19644	(000000–013227)	Hose, Hyd	1
14	77304	(000000–013227)	Hose, Hyd	1
15	78776	(000000–013227)	Hose, Hyd	1
16	77315	(000000–013227)	Hose, Hyd	1
17	71557	(000000–013227)	Hose, Hyd	1
18	34355	(000000–013227)	Hose, Hyd	2
19	13115	(000000–012512)	Hose, Hyd	1
19	84146	(012513–013227)	Tube, Hyd 08 Jf08/Jf08	1
20	31602	(000000–013227)	Hose, Hyd	1
21	82844	(000000–013227)	Hose, Hyd	1
22	02361	(000000–013227)	Hose, Hyd	2
23	87681	(000000–013227)	Hose, Hyd	1
24	16462	(000000–013227)	Hose, Hyd	1
25	77338	(000000–013227)	Hose, Hyd	1
26	55700	(000000–013227)	Hose, Hyd	1
27	82817	(000000–013227)	Hose, Hyd	1
28	84122	(000000–013227)	Hose, Hyd	1
29	31568	(000000–013227)	Hose, Hyd	1
30	62100	(000000–013227)	Hose, Hyd	1
31	02676	(000000–013227)	Hose, Hyd	1
32	57944	(000000–013227)	Hose, Hyd	1
33	01988	(000000–013227)	Hose, Hyd	3
34	73107	(000000–013227)	Tube, Hyd 10	1
35	57949	(012513–013227)	Hose, Hyd, Hi 12, Jf Str/E90	1

Fig. 72 - Hydraulic Hose Group (000000-013227)

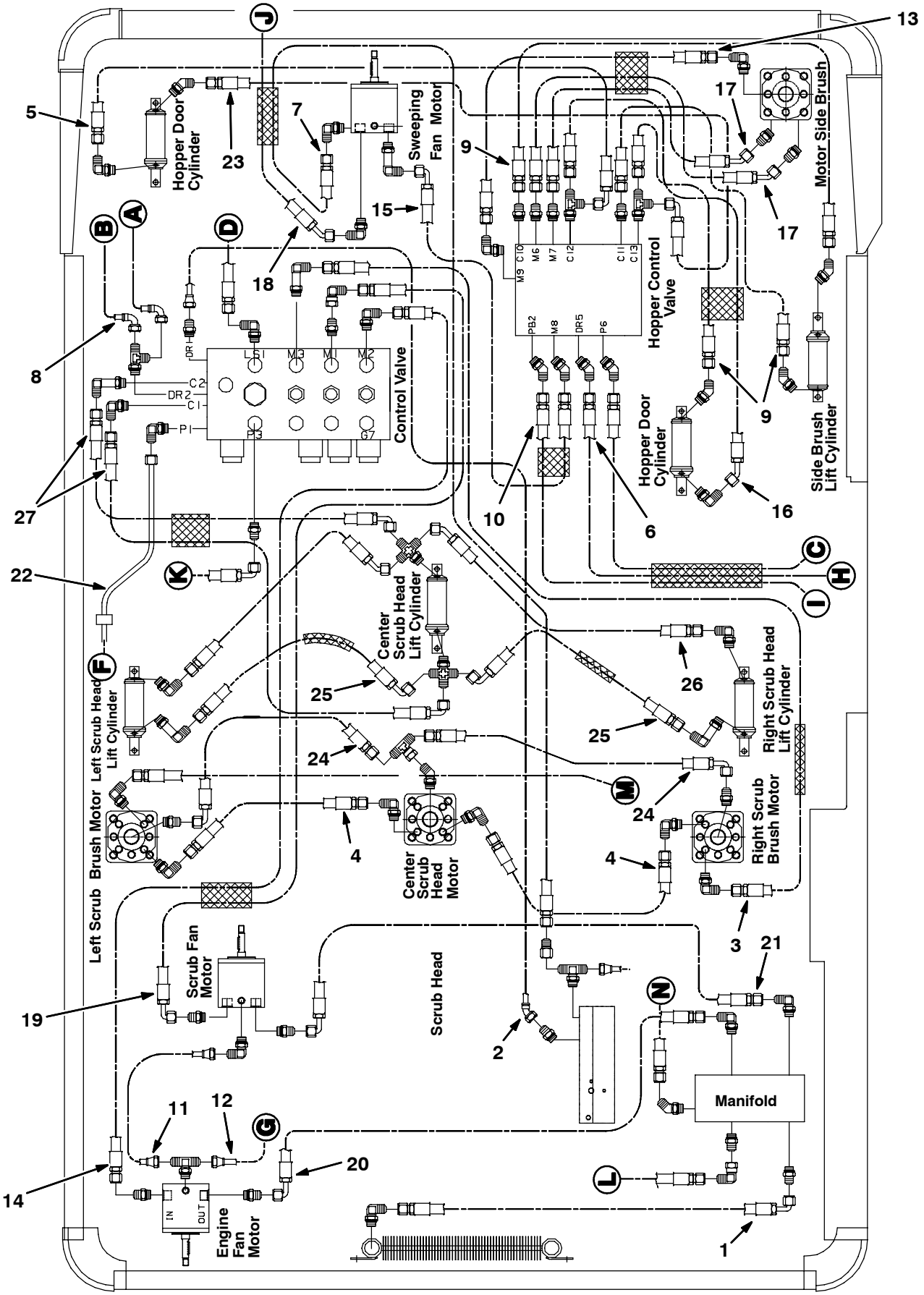

11091 - ALL

Fig. 72 - Hydraulic Hose Group (000000-013227)

Ref.	Part No.	Serial Number	Description	Qty.
1	78780	(000000-013227)	Hose-Hyd Med16 Jf/J9	1
2	77311	(000000-013227)	Hose-Hyd Low06	1
3	65224	(000000-013227)	Hose-Hyd Med08	1
4	77302	(000000-013227)	Hose-Hyd Med08	2
5	77359	(000000-013227)	Hose-Hyd Med04 Jf/J9	1
6	87652	(000000-013227)	Hose-Hyd Med 04 Jf/J9	1
7	57966	(000000-013227)	Hose-Hyd Med04 Jf/Jf	1
8	31602	(000000-013227)	Hose-Hyd Low04 Jf/J9	1
9	82814	(000000-013227)	Hose-Hyd Med04 Jf/Jf	3
10	57160	(000000-013227)	Hose-Hyd Med08 Jf/Jf	1
11	16465	(000000-013227)	Hose-Hyd Low04 Jf/Jf	1
12	78779	(000000-013227)	Hose-Hyd Low04 Jf/Jf	1
13	31568	(000000-013227)	Hose-Hyd Med04 Jf/Jf	1
14	77337	(000000-013227)	Hose-Hyd Med 06	1
15	78820	(000000-013227)	Hose-Hyd Med08 Jf/J9	1
16	57173	(000000-013227)	Hose-Hyd Med04 Jf/J4	1
17	57219	(000000-013227)	Hose-Hyd Med08 Jf/J4	2
18	78821	(000000-013227)	Hose-Hyd Med08 Jf/J4	1
19	78810	(000000-013227)	Hose, Hyd Med08	1
20	78781	(000000-013227)	Hose-Hyd Med06 Jf/J9	1
21	78775	(000000-013227)	Hose-Hyd Med08 Jf/J9	1
22	82826	(000000-012512)	Hose-Hyd Hi 12 Jf/J9	1
22	84148	(012513-013227)	Tube, Hyd 12 Jf12/Jm12	1
23	59579	(000000-013227)	Hose-Hyd Med04	1
24	87651	(000000-013227)	Hose-Hyd Med04 Jf/J9	2
25	48617	(000000-013227)	Hose-Hyd Med04 Jf/J9	2
26	57972	(000000-013227)	Hose-Hyd Med04	2
27	57963	(000000-013227)	Hose-Hyd Med04	2

Fig. 73 - Hydraulic Hose Group (013228-)

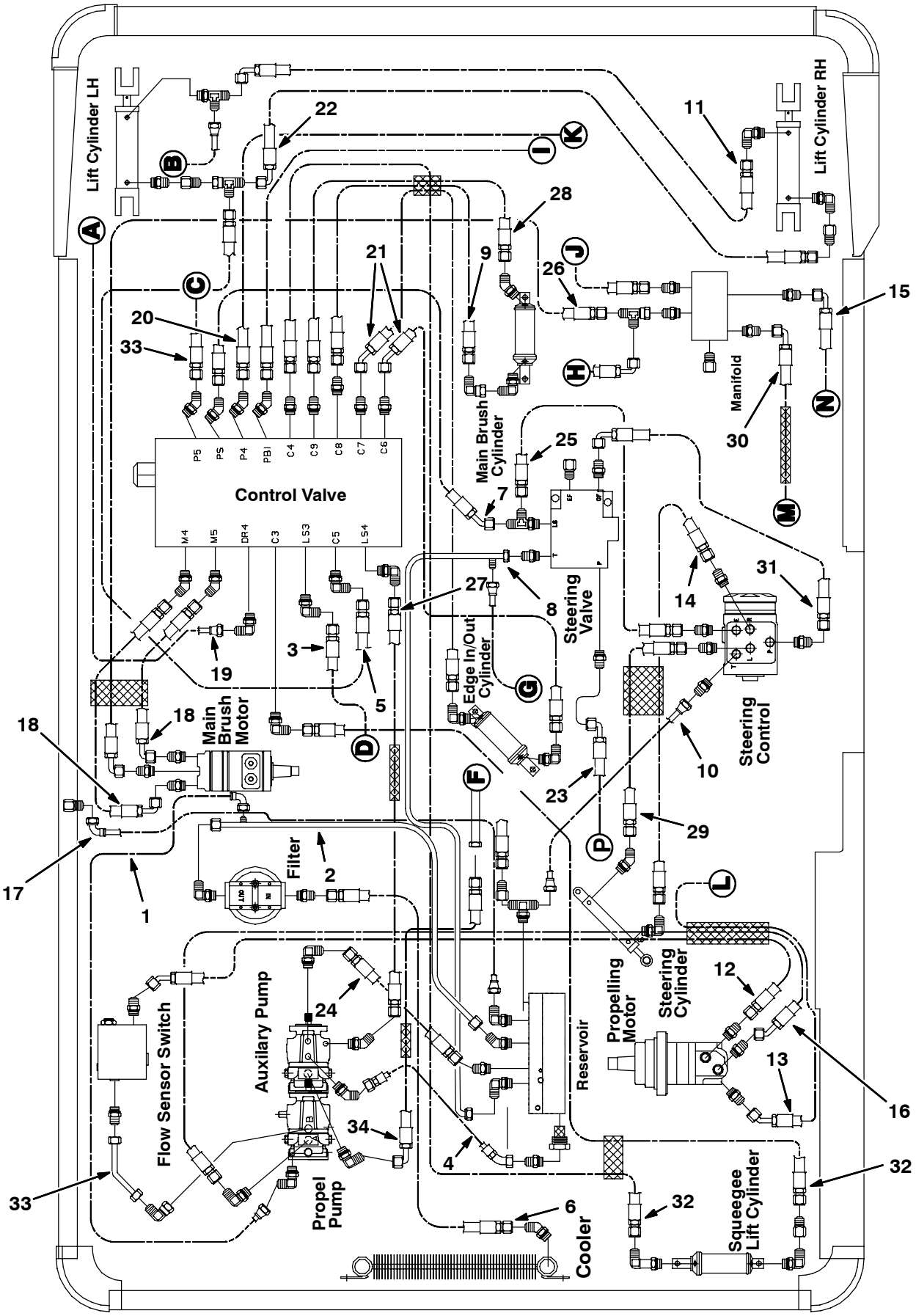

353856 - ALL

Fig. 73 - Hydraulic Hose Group (013228-)

Ref.	Part No.	Serial Number	Description	Qty.
1	78811	(013228–013999)	Hose, Hyd	1
1	1014446	(014000–)	Hose, Hyd,Tc 08, Jf08str /Jf08e90 , 19.0	1
2	84147	(013228–)	Tube, Hyd 16 Jf16/Jf16	1
3	77307	(013228–)	Hose, Hyd	1
4	392646	(013228–)	Hose, Hyd	1
5	31568	(013228–)	Hose, Hyd	1
6	78777	(013228–)	Hose, Hyd	1
7	77305	(013228–)	Hose, Hyd	1
8	1031967	(013228–)	Tube, Hyd, Tank [8410] (Gas only)	1
8	31722	(015000–)	Hose, Hyd, Low04, Jf04str/Jf04str, 015.0 (LPG only)	1
9	77306	(013228–)	Hose, Hyd	1
10	76762	(013228–)	Hose, Hyd	1
11	77303	(013228–)	Hose, Hyd	1
12	71743	(013228–)	Hose, Hyd	1
13	19644	(013228–)	Hose, Hyd	1
14	77304	(013228–)	Hose, Hyd	1
15	78776	(013228–)	Hose, Hyd	1
16	77315	(013228–)	Hose, Hyd	1
17	71557	(013228–)	Hose, Hyd	1
18	34355	(013228–)	Hose, Hyd	2
19	31602	(013228–)	Hose, Hyd	1
20	82844	(013228–)	Hose, Hyd	1
21	02361	(013228–)	Hose, Hyd	2
22	87681	(013228–)	Hose, Hyd	1
23	55697	(013228–)	Hose, Hyd	1
24	392608	(013228–)	Hose, Hyd	1
25	55700	(013228–)	Hose, Hyd	1
26	82817	(013228–)	Hose, Hyd	1
27	361046	(013228–)	Hose, Hyd	1
28	31568	(013228–)	Hose, Hyd	1
29	62100	(013228–)	Hose, Hyd	1
30	02676	(013228–)	Hose, Hyd	1
31	57944	(013228–)	Hose, Hyd	1
32	01988	(013228–)	Hose, Hyd	3
33	392607	(013228–)	Jose, Hyd	1
34	57949	(013228–)	Hose, Hyd, Hi 12, Jf Str/E90	1

Fig. 74 - Hydraulic Hose Group (013228-)

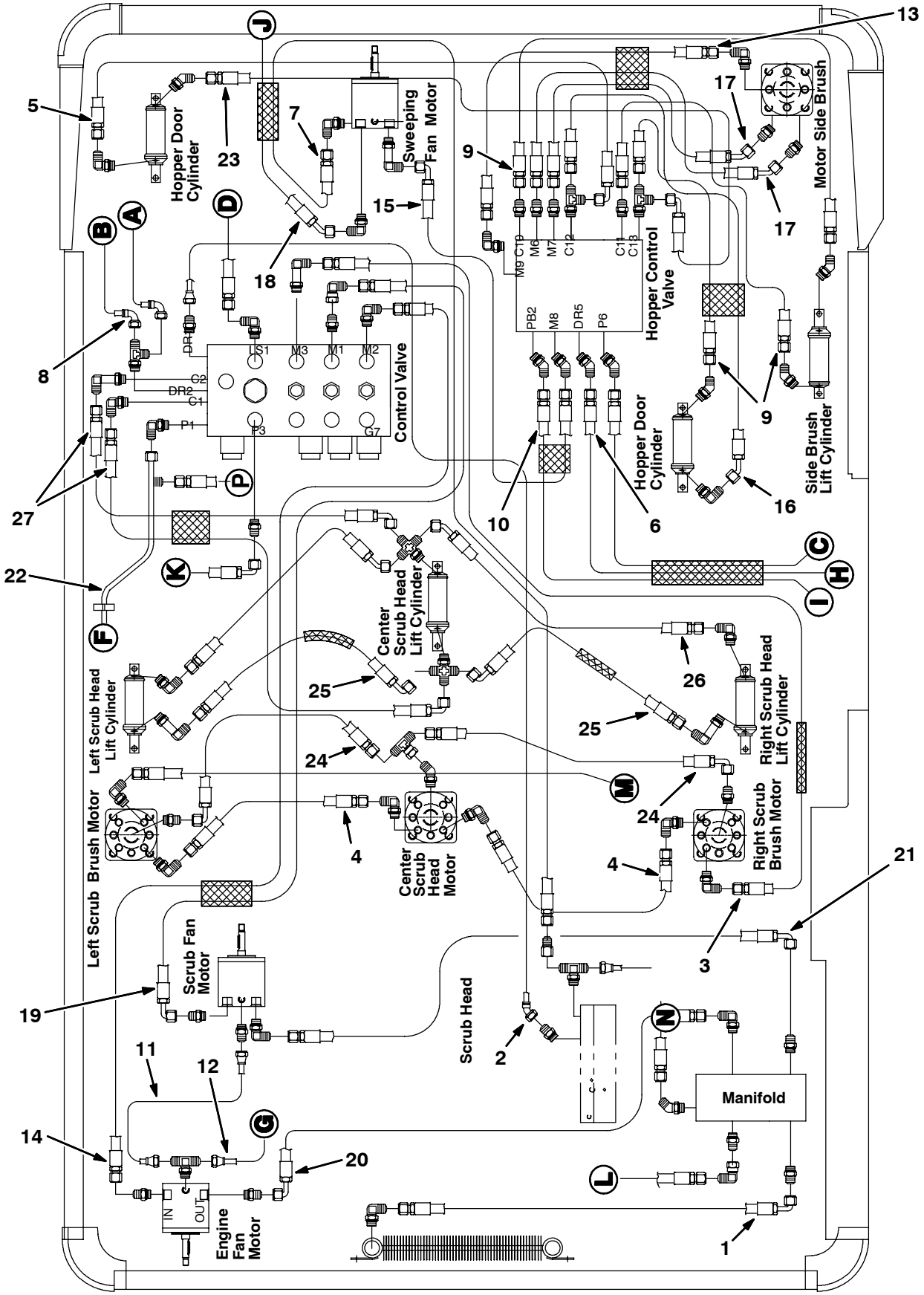

354273 - G, LP

Fig. 74 - Hydraulic Hose Group (013228-)

Ref.	Part No.	Serial Number	Description	Qty.
1	78780	(013228-)	Hose-Hyd Med16 Jf/J9	1
2	77311	(013228-)	Hose-Hyd Low06	1
3	65224	(013228-)	Hose-Hyd Med08	1
4	77302	(013228-)	Hose-Hyd Med08	2
5	77359	(013228-)	Hose-Hyd Med04 Jf/J9	1
6	87652	(013228-)	Hose-Hyd Med 04 Jf/J9	1
7	57966	(013228-)	Hose-Hyd Med04 Jf/Jf	1
8	31602	(013228-)	Hose-Hyd Low04 Jf/J9	1
9	82814	(013228-)	Hose-Hyd Med04 Jf/Jf	3
10	57160	(013228-)	Hose-Hyd Med08 Jf/Jf	1
11	16465	(013228-013999)	Hose-Hyd Low04 Jf/Jf	1
11	02205	(014000-)	Hose, Hyd,Low04, Jf04str /Jf04e90 , 32.0	1
12	78779	(013228-)	Hose-Hyd Low04 Jf/Jf (Gas only)	1
12	1033423	(015000-)	Hose, Hyd, Low04, Jf04str/Jf04str, 028.0 (LPG only)	1
13	31568	(013228-)	Hose-Hyd Med04 Jf/Jf	1
14	77337	(013228-)	Hose-Hyd Med 06	1
15	78820	(013228-)	Hose-Hyd Med08 Jf/J9	1
16	57173	(013228-)	Hose-Hyd Med04 Jf/J4	1
17	57219	(013228-)	Hose-Hyd Med08 Jf/J4	2
18	78821	(013228-)	Hose-Hyd Med08 Jf/J4	1
19	78810	(013228-013999)	Hose, Hyd Med08	1
19	57487	(014000-)	Hose, Hyd,Med08, Jf08str /Jf08e90 , 68.0	1
20	78781	(013228-)	Hose-Hyd Med06 Jf/J9	1
21	78775	(013228-013999)	Hose-Hyd Med08 Jf/J9	1
21	396278	(014000-)	Hose, Hyd,Tc 08, Jf08str /Jf08e90 , 20.0	1
22	392580	(013228-)	Tube, Hyd 12 Jf12/Jm12	1
23	59579	(013228-)	Hose-Hyd Med04	1
24	87651	(013228-)	Hose-Hyd Med04 Jf/J9	2
25	48617	(013228-)	Hose-Hyd Med04 Jf/J9	2
26	57972	(013228-)	Hose-Hyd Med04	2
27	57963	(013228-)	Hose-Hyd Med04	2

Fig. 75 - Hydraulic Reservoir Group

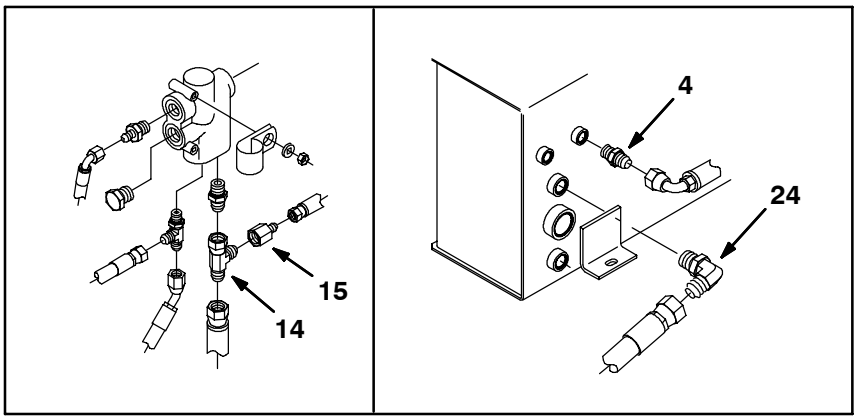

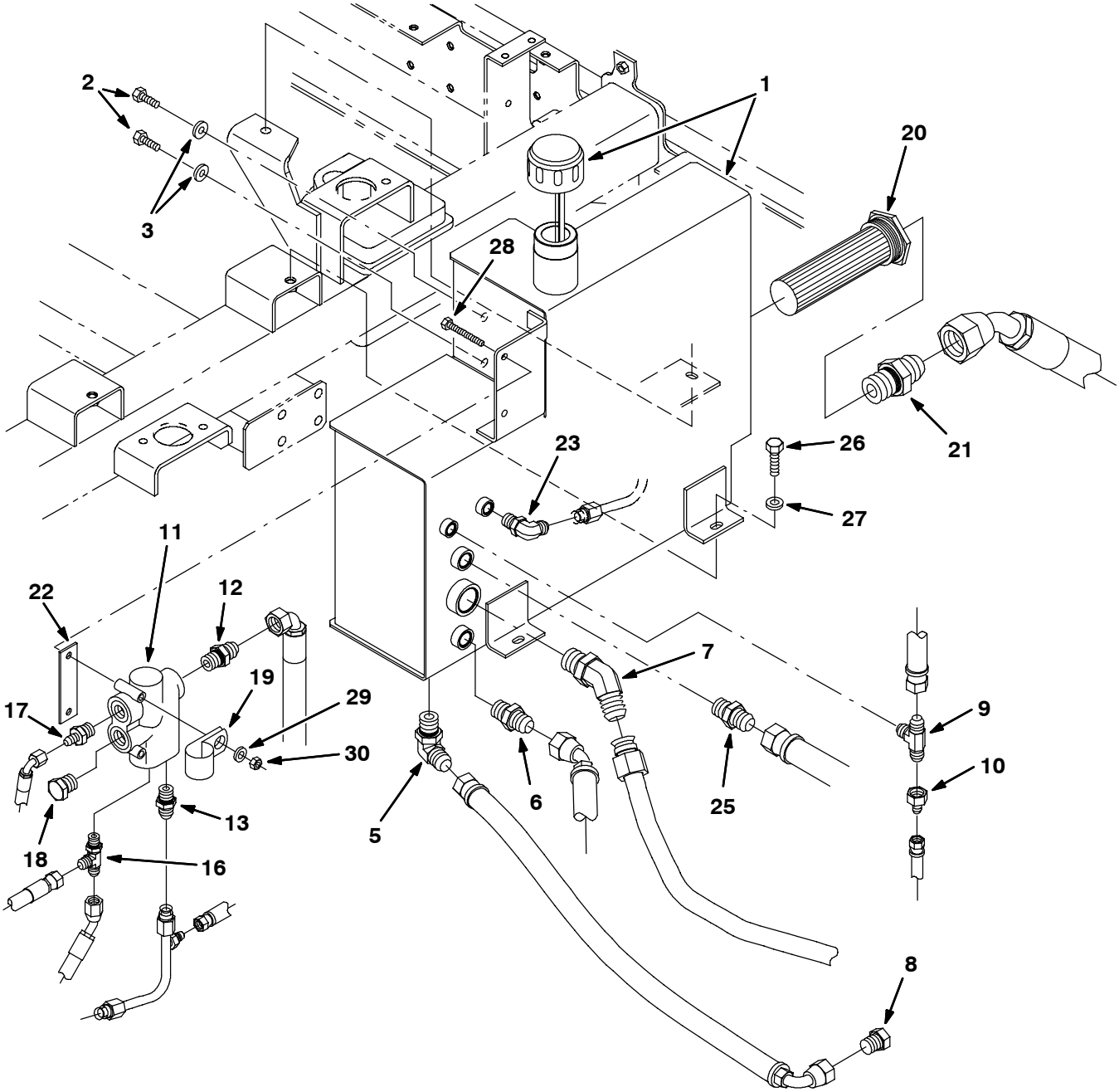

11040 - 8410, NA

Fig. 75 - Hydraulic Reservoir Group

	Ref.	Part No.	Serial Number	Description	Qty.
▽	1	9000681	(000000-)	Reservoir, 10.0 Gal, W/Label [8410]	1
▲▽		78730	(000000-)	Breather, Hyd Cap 40Mic 8.5Ds	1
▲▲		70006	(000000-)	Gasket, Hyd Cap	1
▲	2	21197	(000000-)	Scr Hex .38-16X1.00	2
▲	3	84097	(000000-)	Washer, Sealing	2
	4	56690	(000000-012512)	Ftg-Hyd Str Jm06/Om06	1
	5	44868	(000000-)	Ftg-Hyd E90 Jm08/Om08	1
	6	52402	(000000-)	Ftg-Hyd Str Jm06/Om08	1
	7	57479	(000000-)	Ftg-Hyd E45	1
	8	16376	(000000-)	Ftg-Hyd Plg Jm08	1
	9	67683	(000000-)	Ftg-Hyd Tee Jm06Omjm	1
	10	47752	(000000-)	Ftg-Hyd Str Jm04/Jf06	1
	11	9002675	(000000-014333)	Valve Kit, Hyd, F/73094/84145, Replmt	1
	11	1032036	(014334-)	Valve, Hyd [Priority Ds16g1000]	1
	12	56692	(000000-)	Ftg-Hyd Str Jm08/Om10	1
	13	50960	(000000-)	Ftg-Hyd Str Jm06/Om04	1
	14	42215	(000000-012512)	Ftg-Hyd Tee Jm06Jmjf	1
	15	47752	(000000-012512)	Ftg-Hyd Str Jm04/Jf06	1
	16	34390	(000000-)	Ftg-Hyd Tee Jm04Jmom	1
	17	52402	(000000-)	Ftg-Hyd Str Jm06/Om08	1
	18	40362	(000000-)	Ftg-Hyd Plg Om10	1
	19	86328	(000000-)	Clamp, Cable 1.5 Dia	1
	20	31613	(000000-)	Strainer-Hyd Suction 25-100-03	1
	21	19458	(000000-013227)	Ftg-Hyd Str	1
	21	58858	(013228-)	Ftg-Hyd Str	1
	22	78898	(000000-)	Isolator, Valve	1
	23	56820	(012513-)	Ftg-hyd E90 Jm06/Om06	1
	24	44868	(000000-013227)	Ftg-Hyd E90 Jm08/Om08	1
	25	44869	(013228-)	Fitting, Hyd, Str, Jm08/Om08	1
	26	03192	(000000-)	Screw, Hex, M10 X 1.5 X 30, 8.8	3
	27	32492	(000000-)	Washer, Flat, 0.38, Std	3
	28	39279	(000000-)	Screw, Hex, M8 X 1.25 X 70, 8.8	2
	29	32490	(000000-)	Washer, Flat, 0.25, Std	2
	30	08709	(000000-)	Nut, Hex, Lock, M8 X 1.25, Nl	2

Fig. 76 - Hydraulic Reservoir Group, LPG (015000-)

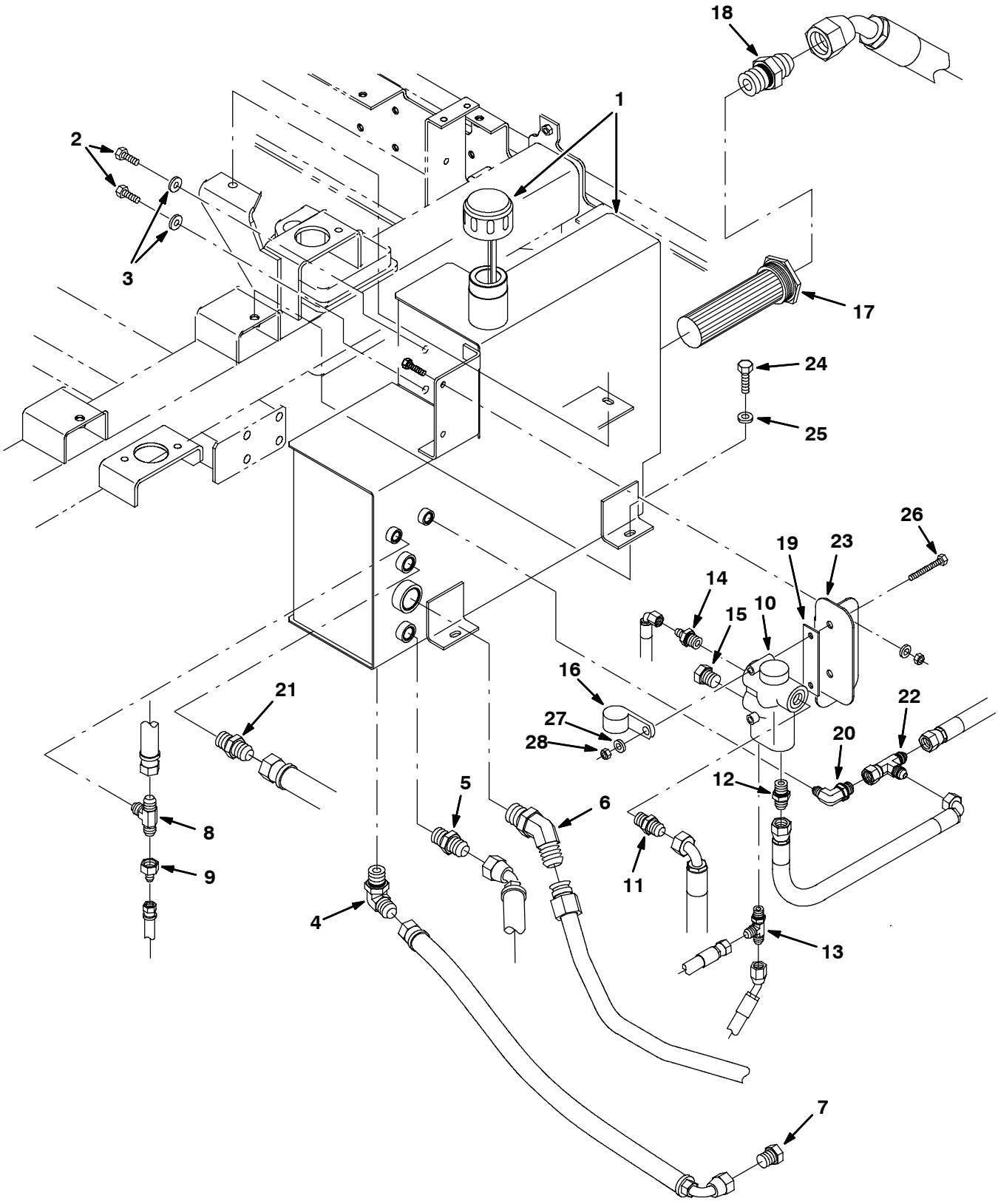

354558 - 8410, NA

Fig. 76 - Hydraulic Reservoir Group, LPG (015000-)

	Ref.	Part No.	Serial Number	Description	Qty.
▽	1	9000681	(015000-)	Reservoir, 10.0 Gal, W/Label [8410]	1
▲▽		78730	(015000-)	Breather, Hyd Cap 40Mic 8.5Ds	1
▲▲		70006	(015000-)	Gasket, Hyd Cap	1
▲	2	21197	(015000-)	Scr Hex .38-16X1.00	2
▲	3	84097	(015000-)	Washer, Sealing	2
	4	44868	(015000-)	Ftg-Hyd E90 Jm08/Om08	1
	5	52402	(015000-)	Ftg-Hyd Str Jm06/Om08	1
	6	57479	(015000-)	Ftg-Hyd E45	1
	7	16376	(015000-)	Ftg-Hyd Plg Jm08	1
	8	67683	(015000-)	Ftg-Hyd Tee Jm06Omjm	1
	9	47752	(015000-)	Ftg-Hyd Str Jm04/Jf06	1
	10	1032036	(015000-)	Valve, Hyd [Priority Ds16g1000]	1
	11	56692	(015000-)	Ftg-Hyd Str Jm08/Om10	1
	12	55586	(015000-)	Fitting, Hyd, Str, Jm04/Om04	1
	13	34390	(015000-)	Ftg-Hyd Tee Jm04Jmom	1
	14	52402	(015000-)	Ftg-Hyd Str Jm06/Om08	1
	15	40362	(015000-)	Ftg-Hyd Plg Om10	1
	16	86328	(015000-)	Clamp, Cable 1.5 Dia	1
	17	31613	(015000-)	Strainer-Hyd Suction 25-100-03	1
	18	58858	(015000-)	Ftg-Hyd Str	1
	19	78898	(015000-)	Isolator, Valve	1
	20	47638	(015000-)	Fitting, Hyd, E90, Jm04/Om06	1
	21	44869	(015000-)	Fitting, Hyd, Str, Jm08/Om08	1
	22	57988	(015000-)	Fitting, Hyd, Tee, Jf04/Jm04/Jm04, Run	1
	23	1029477	(015000-)	Bracket, Plt, Hyd Valve, Adj	1
	24	03192	(015000-)	Screw, Hex, M10 X 1.5 X 30, 8.8	3
	25	32492	(015000-)	Washer, Flat, 0.38, Std	3
	26	39279	(015000-)	Screw, Hex, M8 X 1.25 X 70, 8.8	2
	27	32490	(015000-)	Washer, Flat, 0.25, Std	2
	28	08709	(015000-)	Nut, Hex, Lock, M8 X 1.25, Nl	2

Fig. 77 - Sweeper Main Hydraulic Valve Group

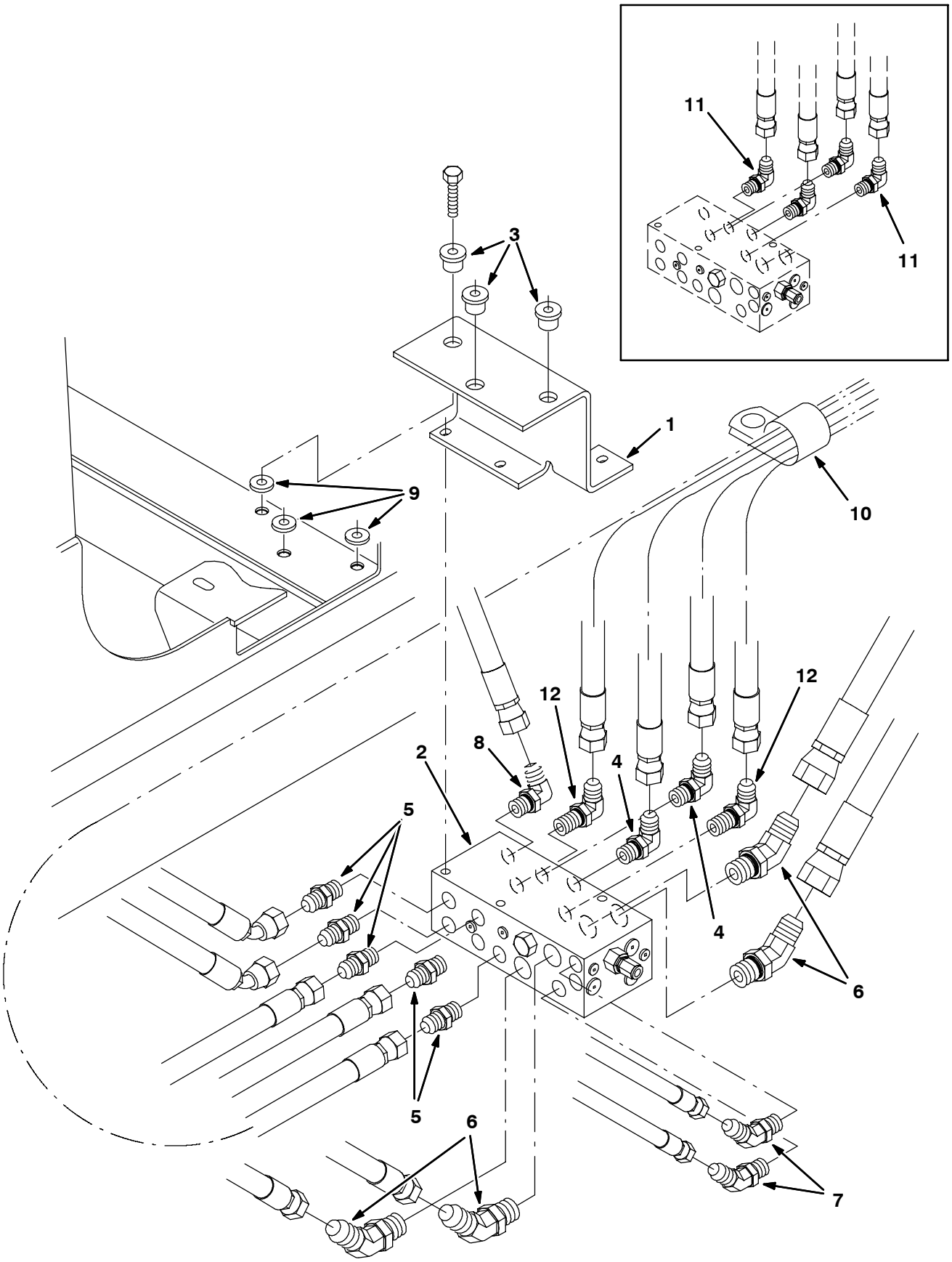

11065 - ALL

Fig. 77 - Sweeper Main Hydraulic Valve Group

Ref.	Part No.	Serial Number	Description	Qty.
1	10618	(010308-)	Bracket Wldt, Mtg, Valve	1
2	84012	(000000-)	Valve, Hyd Control Sol (See Breakdowns)	1
3	54274	(000000-)	Isolator-Vibration,125Lb.Ratng	3
4	77097	(000000-)	Ftg-Hyd E90 Jm04/Om04	2
5	55586	(000000-)	Ftg-Hyd Str Jm04/Om04	5
6	42226	(000000-)	Ftg-Hyd E45 Jm08/Om08	4
7	34359	(000000-)	Ftg-Hyd E45 Jm04/Om04	2
8	77098	(000000-)	Ftg-Hyd E90 Jm06/Om04	1
9	13248	(000000-)	Washer, .400B 1.12D .12Cr.Znc	1
10	53466	(000000-)	Clamp, Hose	1
11	77097	(000000-013227)	Ftg-Hyd E90 Jm04/Om04	2
12	82825	(013228-)	Fitting, Hyd, E90, Jm04om04l	2

Fig. 78 - Sweeper Side Brush Lift Group

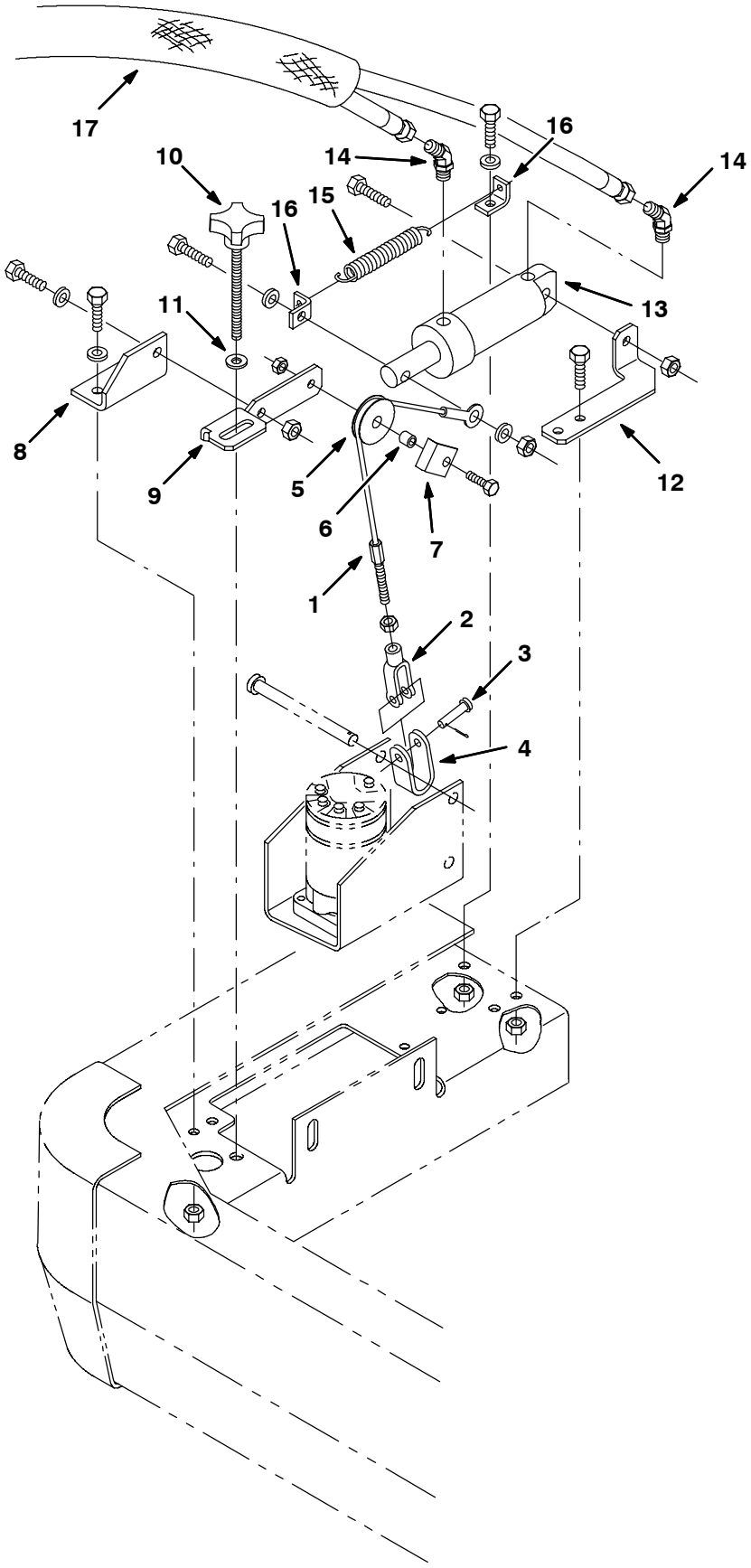

11067 - ALL

Fig. 78 - Sweeper Side Brush Lift Group

Ref.	Part No.	Serial Number	Description	Qty.
1	77335	(000000-)	Cable, Lift, Side Brush	1
2	12267	(000000-)	Yoke, End-Adjustable	1
3	29558	(000000-)	Pin,Clevis,0.37 Dia.X 1.50 Lg	1
4	59899	(000000-)	Bracket, Side Brush	1
5	369781	(000000-)	Pulley, Cable, 1.5d, Nyl	1
6	56624	(000000-)	Spacer, Pulley	1
7	54400	(000000-)	Angle, Cable Keeper	1
8	72743	(000000-)	Bracket, Support, Pulley	1
9	72740	(000000-)	Bracket, Adjustment, Sidebrush	1
10	54848	(000000-)	Knob, Adjusting	1
11	52296	(000000-)	Washer,Nyl,0.405Bx0.812X.060Th	1
12	72741	(000000-)	Bracket, Support, Cylinder	1
13	73089	(000000-)	Cylinder, Hyd 1.5B 02.8S.2500	1
14	34359	(000000-)	Ftg-Hyd E45 Jm04/Om04	2
15	29499	(000000-)	Spring, Tens.750Dx.10Wirex4.5	1
16	77336	(000000-)	Angle, Retainer, Spring	2
17	31646	(000000-)	Sleeve, Nylon 25.0L	1

Fig. 79 - Sweeper Side Brush Motor and Pivot Group

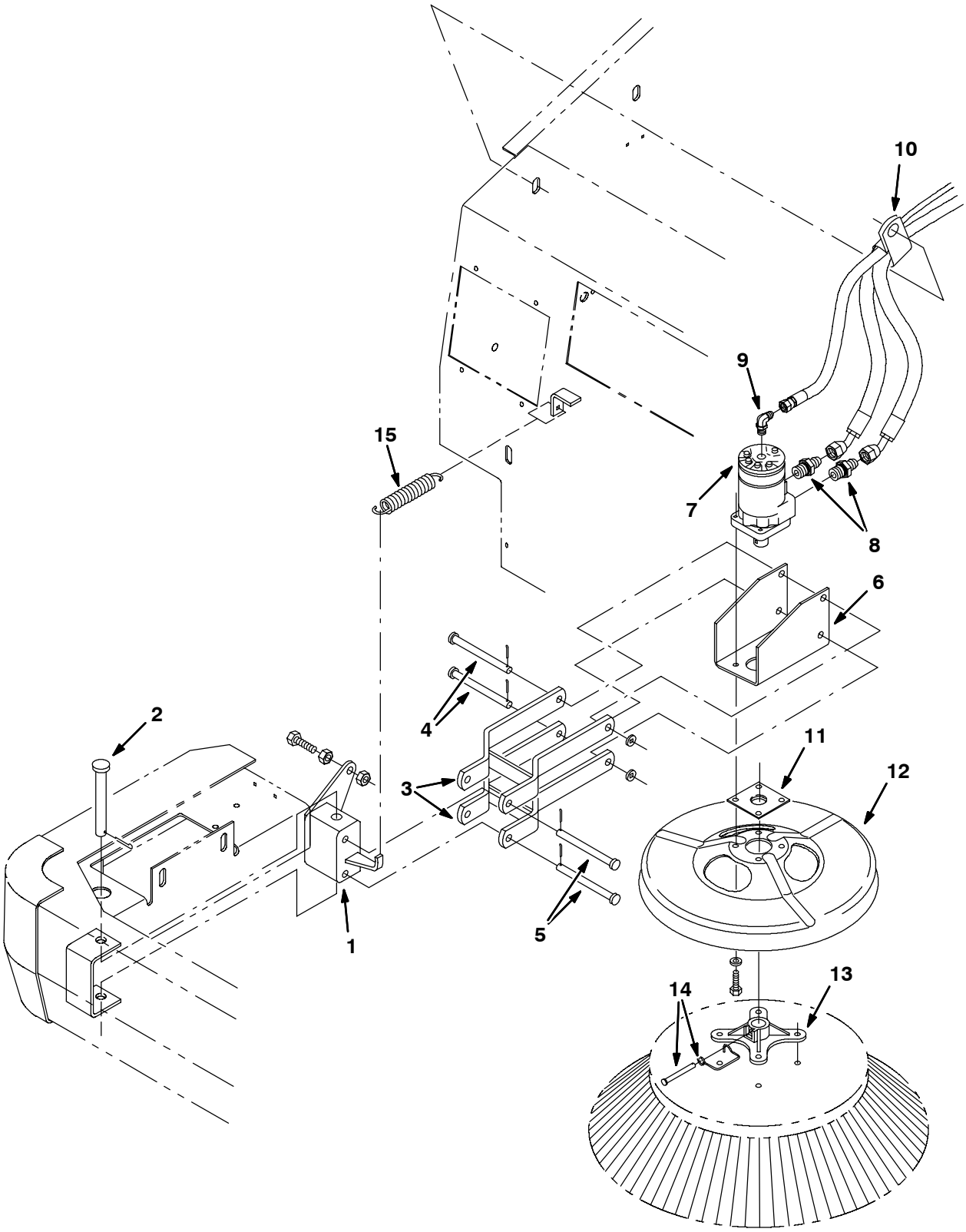

09018 - ALL

Fig. 79 - Sweeper Side Brush Motor and Pivot Group

Ref.	Part No.	Serial Number	Description	Qty.
1	54050	(000000-)	Pivot Assy, S Br	1
2	54660	(000000-)	Pin, Clevis .75 Diax5.5Lg	1
3	53965	(000000-)	Arm, Lift	2
4	51225	(000000-)	Pin,Clevis,0.50 Dia.X 5.50 Lg	2
5	51538	(000000-)	Pin,Clevis,0.50 Dia.X 5.00 Lg	2
6	71540	(000000-)	Bracket, Motor	1
7	374628	(000000-012654)	Replacement Kit, Motor Hyd. F/53435 (See Breakdowns)	1
7	373340	(012655-)	Motor-Hyd Gear In 14.13 B1500 (See Breakdowns)	1
8	56692	(000000-)	Ftg-Hyd Str Jm08/Om10	2
9	77097	(000000-)	Ftg-Hyd E90 Jm04/Om04	1
10	53466	(000000-)	Clamp, Hose	4
11	16082	(000000-)	Guard, String, Brush Motor	1
12	53984	(000000-)	Guard, Brush	1
13	47501	(000000-)	Hub, Brush Adaptor, 1.00B	1
14	84581	(000000-)	Pin Assy, Side Brush W/Clip	1
15	47745	(000000-)	Sprng,Tens,1.12Odx.14Wire 4.8L	1

Fig. 80 - Sweeper Main Brush Lift Group

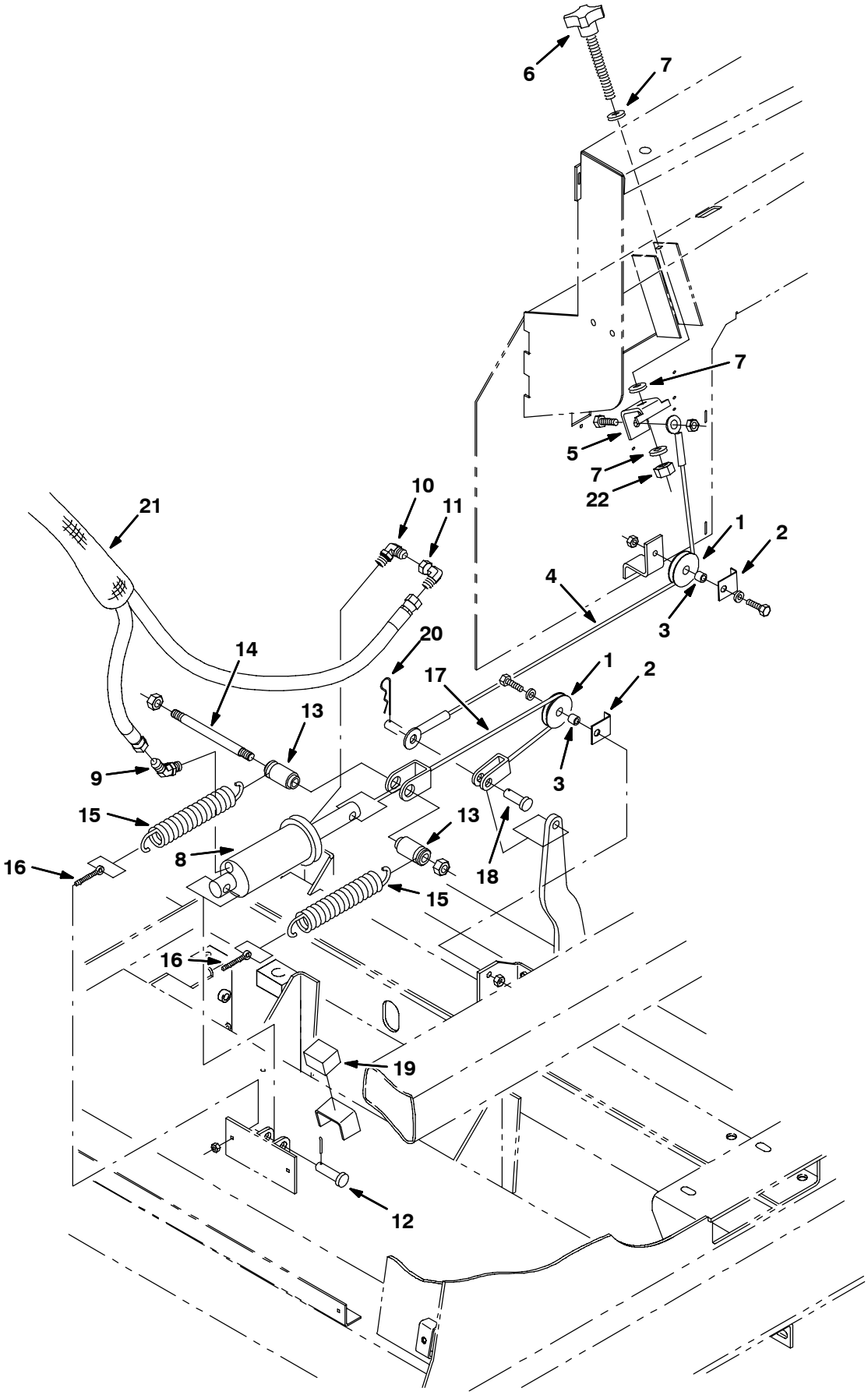

11069 - ALL

Fig. 80- Sweeper Main Brush Lift Group

Ref.	Part No.	Serial Number	Description	Qty.
1	369781	(000000-)	Pulley, Cable, 1.5d, Nyl	2
2	54400	(000000-)	Angle, Cable Keeper	2
3	56624	(000000-)	Spacer, Pulley	2
4	73261	(000000-)	Cable, Adj, Main Brush	1
5	83870	(000000-)	Bracket, Brush Lift Adj M10	1
6	54848	(000000-)	Knob, Adjusting	1
7	52296	(000000-)	Washer,Nyl,0.405Bx0.812X.060Th	1
1028042 8	~~54096~~	(000000-)	Cylinder-Hyd2.0X4.0Da2500Psi	1
9	34359	(000000-)	Ftg-Hyd E45 Jm04/Om04	1
10	77097	(000000-)	Ftg-Hyd E90 Jm04/Om04	1
11	39210	(000000-)	Ftg-Hyd E90 Jm04/Jf04	1
12	43290	(000000-)	Pin,Clevis,0.50 Dia.X 1.75 Lg	1
13	72847	(000000-)	Tube, Retainer, Spring	2
14	72848	(000000-)	Rod, Threaded, Brush Lift	1
15	33404	(000000-)	Spring, Tension	2
16	78944	(000000-)	Bolt-Eye, .31-18Th.18B 2.75L	2
17	72849	(000000-)	Cable, Brushlift	1
18	75520	(000000-)	Pin,Clevis,0.50 Dia.X 1.50 Lg	1
19	72858	(000000-)	Pad	1
20	08175	(000000-)	Pin, Cotter .125X1.25	1
21	50121	(000000-)	Sleeve, Nyl 8.0L	1
22	41430	(000000-)	Nut, Hex, Lock, M10 X 1.5, Nl	1

Fig. 81 - Sweeper Main Brush Drive Group

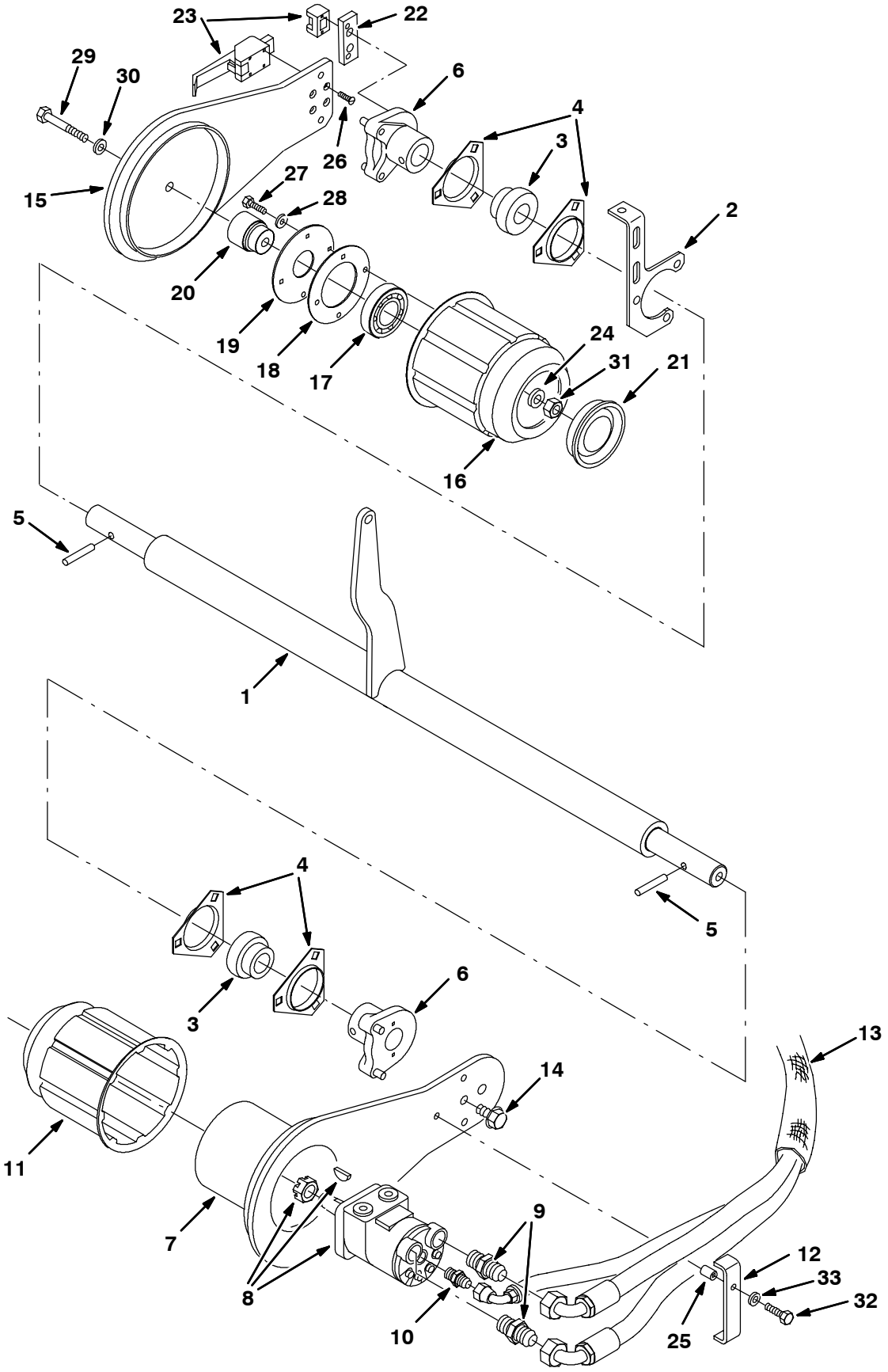

08984 - ALL

Fig. 81 - Sweeper Main Brush Drive Group

Ref.	Part No.	Serial Number	Description	Qty.
1	73258	(000000-)	Shaft Wldt, Main Brush	1
2	72458	(000000-)	Plate, Mtg, Main Brush Shaft	1
3	51448	(000000-)	Bearing&Clr ,1.25B 2.44D 1.41W	2
4	51449	(000000-)	Flange,Brg,3 Hole	4
5	51317	(000000-)	Pin,Roll,.38Odx2.00L,.375/.382	2
6	54680	(000000-)	Hub Assy, Brush Arm	2
7	13156	(000000-)	Arm Wldt, Brush, Drive	1
8	74468	(000000-)	Motor, Hyd Gear In 02.8 B 1500 (See Breakdowns)	1
9	44869	(000000-)	Ftg-Hyd Str Jm08/Om08	2
10	55586	(000000-)	Ftg-Hyd Str Jm04/Om04	1
11	87631	(000000-)	Plug Weld, Brush Drive, Sweep	1
12	63516	(000000-)	Bracket, Hose	1
13	82832	(000000-)	Sleeve-Nyln #38 25.0L	1
14	53985	(000000-)	Plug Thread 1/2-13	1
15	54659	(000000-)	Arm Wldt, Idlerr, W/Brush	1
16	55779	(000000-)	Plug Wldt, Idler	1
17	24899AM	(000000-)	Bearing-Ball,1.38B 2.83D 0.67W	1
18	30252	(000000-)	Strip Retainer Bearing	1
19	30253	(000000-)	Plate Seal	1
20	30251	(000000-)	Shaft Idler	1
21	30255	(000000-)	Plug Tube	1
22	54204	(000000-)	Plate, Mounting, Latch	1
23	54878	(000000-)	Latch	1
24	51564	(000000-)	Washer, .531B 1.75D .12Cr.Znc	1
25	09900-1	(000000-)	Sleeve	1
26	09120	(000000-)	Screw, Flt, M5 X 0.8 X 16, 10.9	6
27	12277	(000000-)	Screw, Hex, M6 X 1.0 X 20, Ss, Nl	4
28	01684	(000000-)	Washer, Flat, 0.25, Ss	4
29	06974	(000000-)	Screw, Hex, M12 X 1.75 X 80, 8.8	1
30	36328	(000000-)	Washer, Flat, Belleville, .50	1
31	08711	(000000-)	Nut, Hex, Lock, M12 X 1.75,Nl	1
32	07805	(000000-)	Screw, Hex, M6 X 1.0 X 35, Ss	1
33	01684	(000000-)	Washer, Flat, 0.25, Ss	1

Fig. 82 - Scrub Brush Frame Group

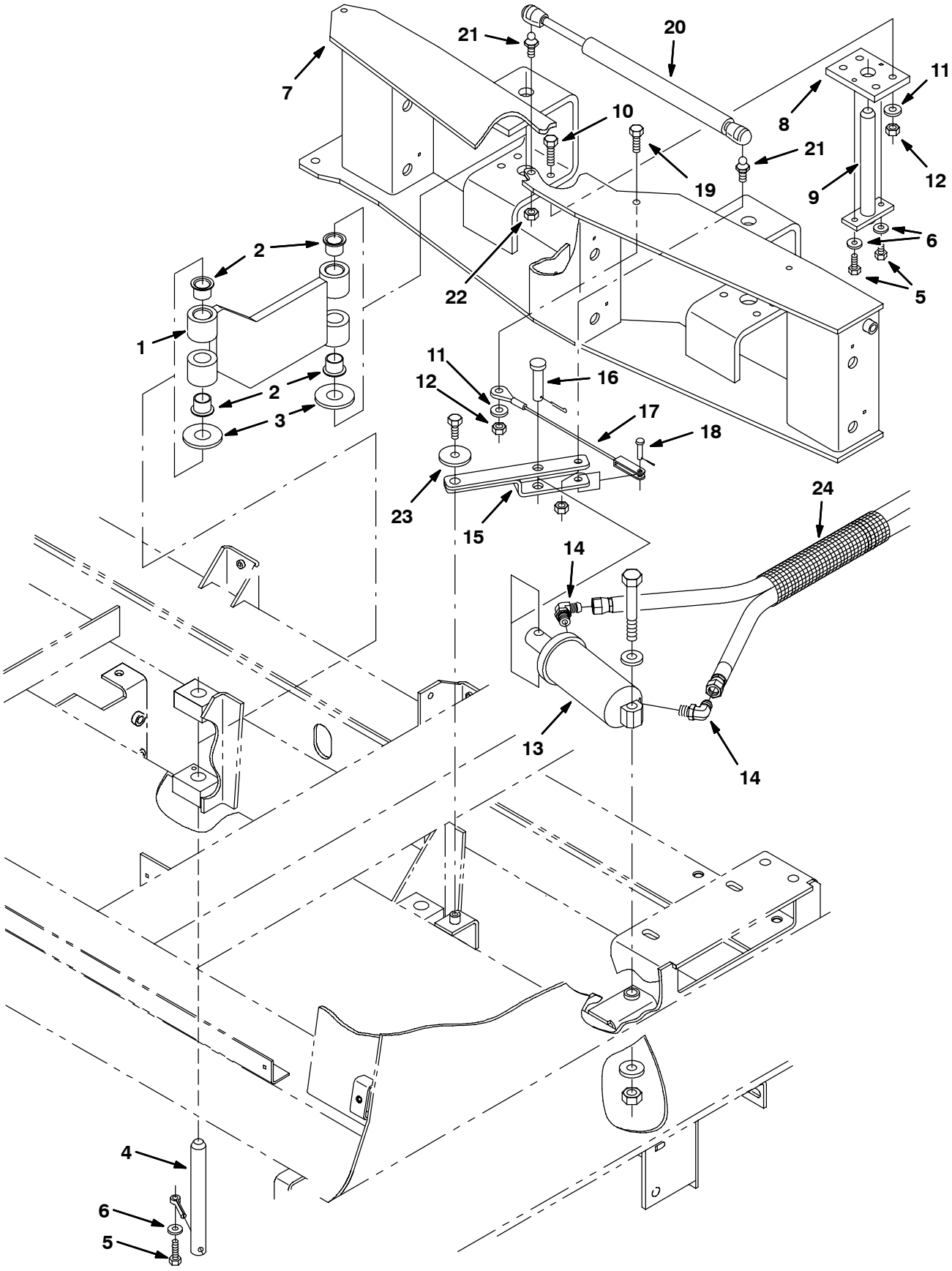

11022 - ALL

Fig. 82 - Scrub Brush Frame Group

Ref.	Part No.	Serial Number	Description	Qty.
1	72599	(000000-)	Link Wldt, Edge Scrubbing	2
2	72763	(000000-)	Bearing, Flange, .750 Bore	8
3	32495	(000000-)	Washer Flt .75 Hard	4
4	72776	(000000-)	Pin, Scrub Head, .75D X 6.812L	2
5	09007	(000000-)	Scr Hexssm 6X1.0 25	6
6	01684	(000000-)	Washer Flt .25 Ss	6
7	72768	(000000-)	Frame Wldt, Mtg, Brush	1
8	72836	(000000-)	Bar, Adjustment, Pivot	2
9	84067	(000000-)	Pin Wldt, Scrub Head	2
10	09011	(000000-)	Scr Hexssm 8X1.25 30	8
11	01685	(000000-)	Washer Flt .31 Ss	9
12	08713	(000000-)	Nut-Hxlocnyln M 8X1.25 Reg Ss	9
13	54096	(000000-)	Cylinder-Hyd2.0X4.0Da2500Psi	1
14	77097	(000000-)	Ftg-Hyd E90 Jm04/Om04	2
15	84021	(000000-)	Lever Wldt, Edge Scrubbing	1
16	43290	(000000-)	Pin,Clevis,0.50 Dia.X 1.75 Lg	1
17	72833	(000000-)	Cable	1
18	23786	(000000-)	Pin,Clevis,0.25 Dia.X 0.75 Lg	1
19	09740	(000000-)	Scr Hexssm 8X1.25	1
20	79376	(000000-)	Spring, Gas 34 Lb 6.3 Stroke	1
21	58494	(000000-)	Stud, Ball, Gas Spring	2
22	01760	(000000-)	Nut-Hxlocnyln .31-18 Thin Pltd	2
23	05624	(000000-)	Washer, Flat	1
24	50121	(000000-)	Sleeve, Nylon	1

Fig. 83 - Scrub Brush Group, Left

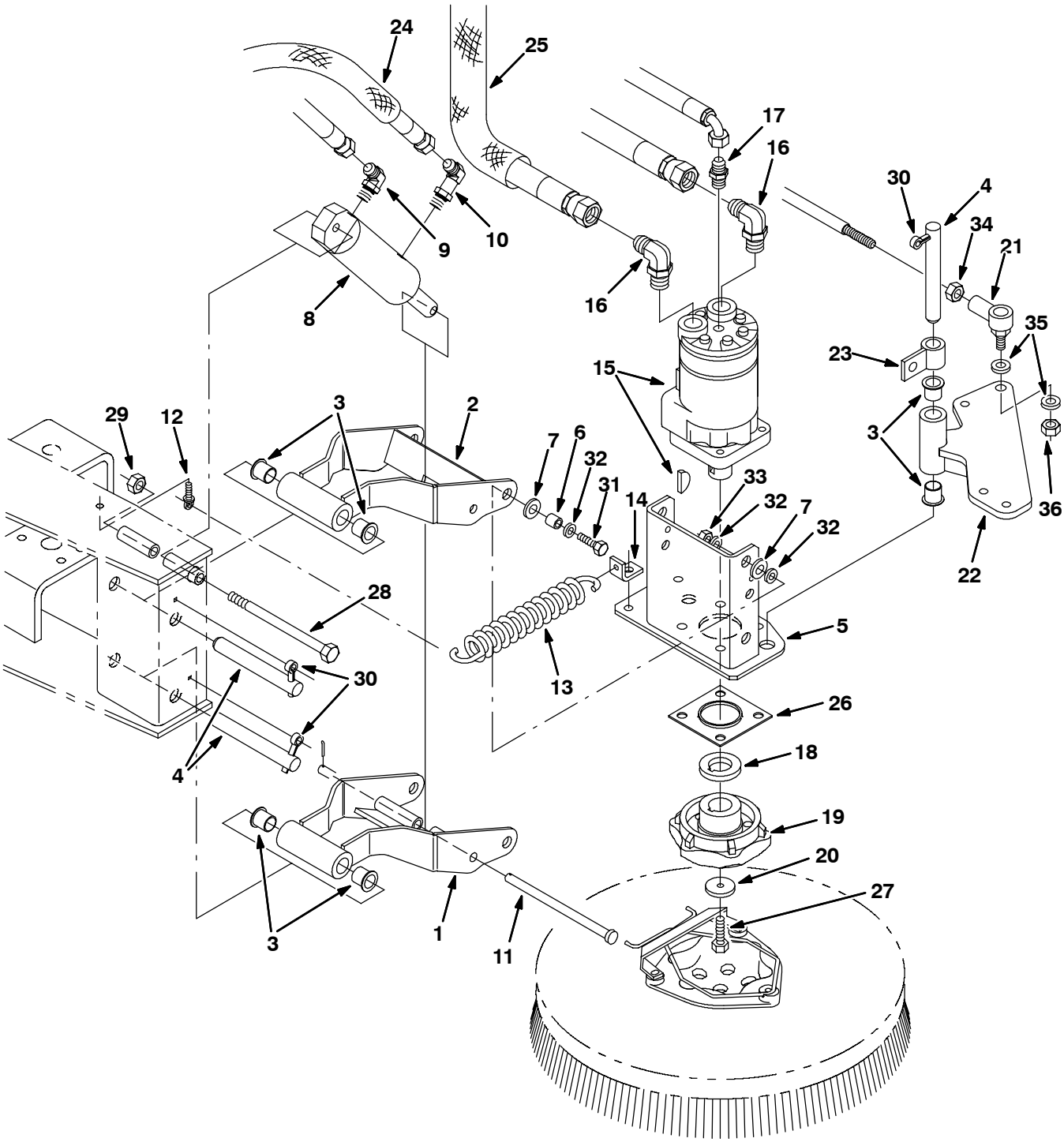

09026 - ALL

Fig. 83 - Scrub Brush Group, Left

Ref.	Part No.	Serial Number	Description	Qty.
1	72663	(000000-)	Link, Lower	1
2	72773	(000000-)	Link Wldt, Upper	1
3	72777	(000000-)	Bushing, Flanged, .625 Id	4
4	72775	(000000-)	Pin, Scrub Brush, .625D 5.00L	3
5	72839	(000000-)	Bracket, Motor	1
6	222460	(000000-)	Sleeve	4
7	86952	(000000-)	Washer-Flat .44 Std Nylon	8
8	379030	(000000-)	Cylinder, Hyd	1
9	77097	(000000-)	Ftg-Hyd E90 Jm04/Om04	1
10	82825	(000000-)	Ftg-Hyd E90 Jm04/Om04	1
11	49924	(000000-)	Pin,Clevis,0.37 Dia.X 6.12 Lg	1
12	48079	(000000-)	Bolt-Eye, .25-20Th .25B 1.4L	1
13	33404	(000000-)	Spring, Tension	1
14	72832	(000000-)	Angle, Retainer, Spring	1
15	73090	(000000-)	Motor, Hyd Gear In 07.3 B 1500 (See Breakdowns)	1
16	44868	(000000-)	Ftg-Hyd E90 Jm08/Om08	2
17	55586	(000000-)	Ftg-Hyd Str Jm04/Om04	1
18	25611	(000000-)	Spacer Hub	1
19	377351	(000000-)	Hub, Drive, Brush, Disk, 1.00b 6t	1
20	19191	(000000-)	Spacer Hub	1
21	05686	(000000-)	Rod End M10 X1.5 W/Stud	1
22	72860	(000000-)	Arm Wldt, Support, Sqge,Lh	1
23	72842	(000000-)	Tube	1
24	87677	(000000-)	Sleeve, Nyl	1
25	84029	(000000-)	Sleeve, Nyl 45.0L	1
26	374613	(012504–)	Guard, String, Scrub Brush	1
27	25046	(000000-)	Screw, Hex, .25-20 X 1.00, 5	1
28	20178	(000000-)	Screw, Hex, .38-16 X 5.50, 5	1
29	50902	(000000-)	Nut, Hex, Lock, .38-16, Nl	1
30	08361	(000000-)	Pin, Cotter, .250 X 1.25	3
31	09011	(000000-)	Screw, Hex, M8 X 1.25 X 30, Ss	4
32	01685	(000000-)	Washer, Flat, 0.31, Ss	12
33	08713	(000000-)	Nut, Hex, Lock, M8 X 1.25, Nl, Ss	4
34	32716	(000000-)	Nut, Hex, Jam, M10 X 1.5, Ss	1
35	01686	(000000-)	Washer, Flat, 0.44b 1.00d .08, Ss	2
36	08714	(000000-)	Nut, Hex, Lock, M10 X 1.5, Nl, Ss	1

Fig. 84 - Scrub Brush Group, Center

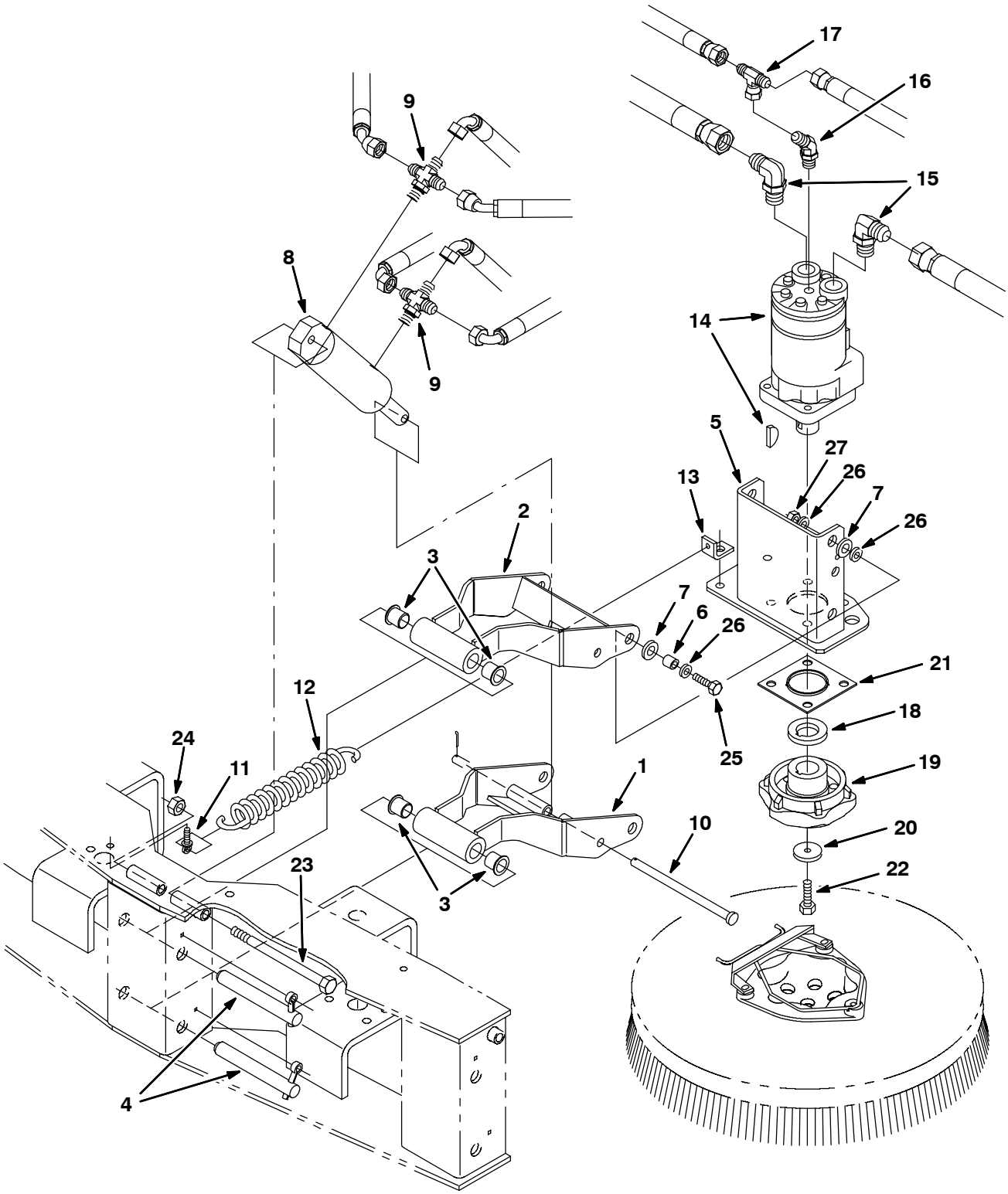

09024 - ALL

Fig. 84 - Scrub Brush Group, Center

Ref.	Part No.	Serial Number	Description	Qty.
1	72663	(000000-)	Link, Lower	1
2	72773	(000000-)	Link Wldt, Upper	1
3	72777	(000000-)	Bushing, Flanged, .625 Id	4
4	72775	(000000-)	Pin, Scrub Brush, .625D 5.00L	2
5	72839	(000000-)	Bracket, Motor	1
6	222460	(000000-)	Sleeve	4
7	86952	(000000-)	Washer-Flat .44 Std Nylon	8
8	379030	(000000-)	Cylinder, Hyd	1
9	82802	(000000-)	Ftg-Hyd Crs Jm04/Om04	2
10	49924	(000000-)	Pin,Clevis,0.37 Dia.X 6.12 Lg	1
11	48079	(000000-)	Bolt-Eye, .25-20Th .25B 1.4L	1
12	33404	(000000-)	Spring, Tension	1
13	72832	(000000-)	Angle, Retainer, Spring	1
14	73090	(000000-)	Motor, Hyd Gear In 07.3 B 1500 (See Breakdowns)	1
15	44868	(000000-)	Ftg-Hyd E90 Jm08/Om08	2
16	34359	(000000-)	Ftg-Hyd E45 Jm04/Om04	1
17	57411	(000000-)	Ftg-Hyd Tee Jm04Jfjm	1
18	25611	(000000-)	Spacer Hub	1
19	377351	(000000-)	Hub, Drive, Brush, Disk, 1.00b 6t	1
20	19191	(000000-)	Spacer Hub	1
21	374613	(012504–)	Guard, String, Scrub Brush	1
22	25046	(000000-)	Screw, Hex, .25-20 X 1.00, 5	1
23	20178	(000000-)	Screw, Hex, .38-16 X 5.50, 5	1
24	50902	(000000-)	Nut, Hex, Lock, .38-16, Nl	1
25	09011	(000000-)	Screw, Hex, M8 X 1.25 X 30, Ss	4
26	01685	(000000-)	Washer, Flat, 0.31, Ss	12
27	08713	(000000-)	Nut, Hex, Lock, M8 X 1.25, Nl, Ss	4

Fig. 85 - Scrub Brush Group, Right

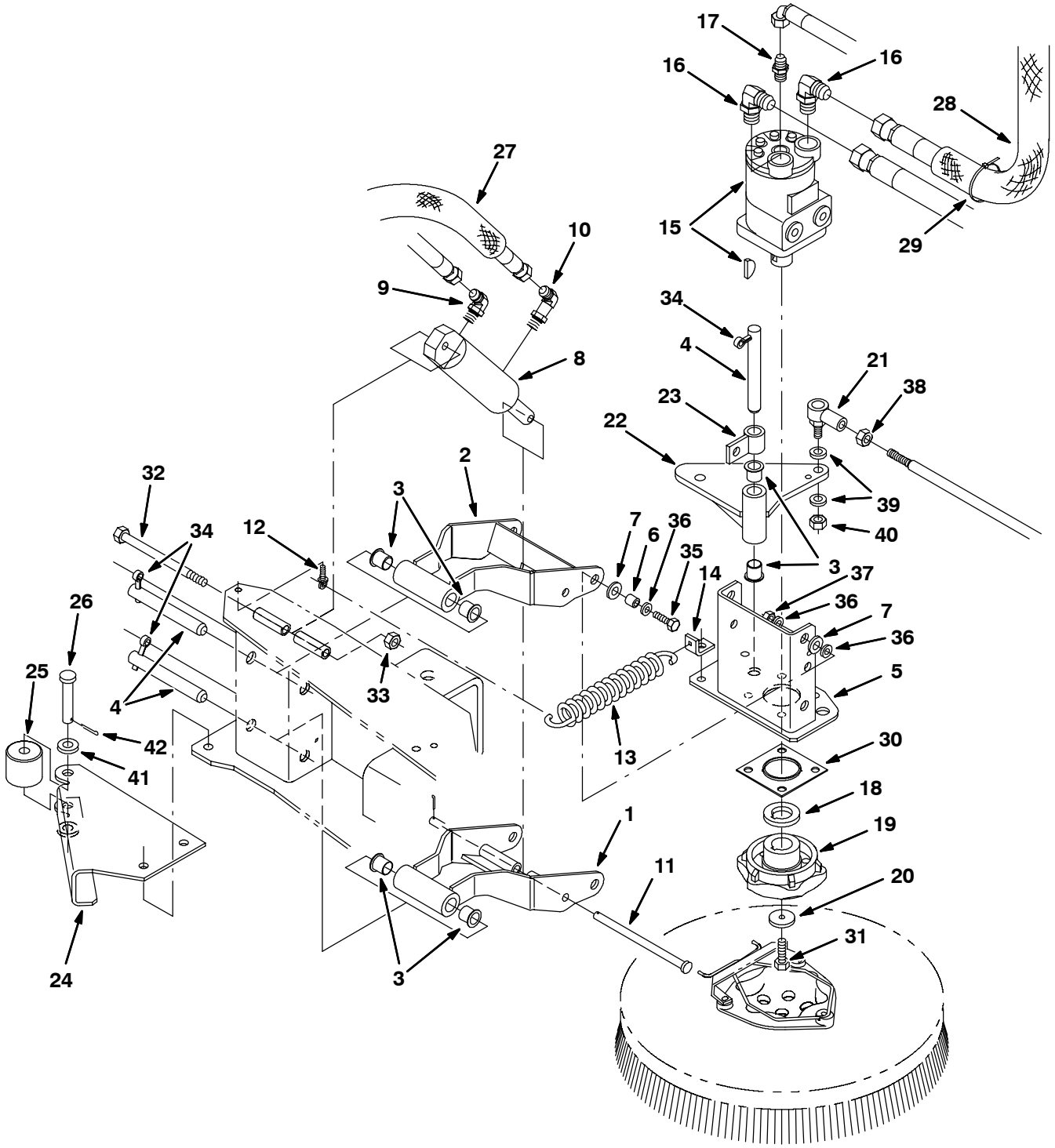

11071 - ALL

Fig. 85 - Scrub Brush Group, Right

Ref.	Part No.	Serial Number	Description	Qty.
1	72663	(000000-)	Link, Lower	1
2	72773	(000000-)	Link Wldt, Upper	1
3	72777	(000000-)	Bushing, Flanged, .625 Id	6
4	72775	(000000-)	Pin, Scrub Brush, .625D 5.00L	3
5	72839	(000000-)	Bracket, Motor	1
6	222460	(000000-)	Sleeve	4
7	86952	(000000-)	Washer-Flat .44 Std Nylon	8
8	379030	(000000-)	Cylinder, Hyd	1
9	77097	(000000-)	Ftg-Hyd E90 Jm04/Om04	1
10	82825	(000000-)	Ftg-Hyd E90 Jm04/Om04	1
11	49924	(000000-)	Pin,Clevis,0.37 Dia.X 6.12 Lg	1
12	48079	(000000-)	Bolt-Eye, .25-20Th .25B 1.4L	1
13	33404	(000000-)	Spring, Tension	1
14	72832	(000000-)	Angle, Retainer, Spring	1
15	73090	(000000-)	Motor, Hyd Gear In 07.3 B 1500 (See Breakdowns)	1
16	44868	(000000-)	Ftg-Hyd E90 Jm08/Om08	2
17	55586	(000000-)	Ftg-Hyd Str Jm04/Om04	1
18	25611	(000000-)	Spacer Hub	1
19	377351	(000000-)	Hub, Drive, Brush, Disk, 1.00b 6t	1
20	19191	(000000-)	Spacer Hub	1
21	05686	(000000-)	Rod End M10 X1.5 W/Stud	1
22	72859	(000000-)	Arm Wldt, Support, Squeegee,Rh	1
23	72842	(000000-)	Tube	1
24	72945	(000000-)	Guard, Scrub, Edge	1
25	72946	(000000-)	Roller 1.75	1
26	06279	(000000-)	Pin,Clevis,0.50 Dia.X 2.50 Lg	1
27	87677	(000000-)	Sleeve, Nyl	1
28	82833	(000000-)	Sleeve, Nyl 35.0L	1
29	49266	(000000-)	Tie, Cable	1
30	374613	(012504–)	Guard, String, Scrub Brush	1
31	25046	(000000-)	Screw, Hex, .25-20 X 1.00, 5	1
32	20178	(000000-)	Screw, Hex, .38-16 X 5.50, 5	1
33	50902	(000000-)	Nut, Hex, Lock, .38-16, Nl	1
34	08361	(000000-)	Pin, Cotter, .250 X 1.25	3
35	09011	(000000-)	Screw, Hex, M8 X 1.25 X 30, Ss	4
36	01685	(000000-)	Washer, Flat, 0.31, Ss	12
37	08713	(000000-)	Nut, Hex, Lock, M8 X 1.25, Nl, Ss	4
38	32716	(000000-)	Nut, Hex, Jam, M10 X 1.5, Ss	1
39	01686	(000000-)	Washer, Flat, 0.44b 1.00d .08, Ss	2
40	08714	(000000-)	Nut, Hex, Lock, M10 X 1.5, Nl, Ss	1
41	41619	(000000-)	Washer, Flat, 0.56b 1.38d .11, Ss	1
42	08175	(000000-)	Pin, Cotter, .125 X 1.25	1

Fig. 86 - Scrub Hydraulic Control Solenoid Valve Group

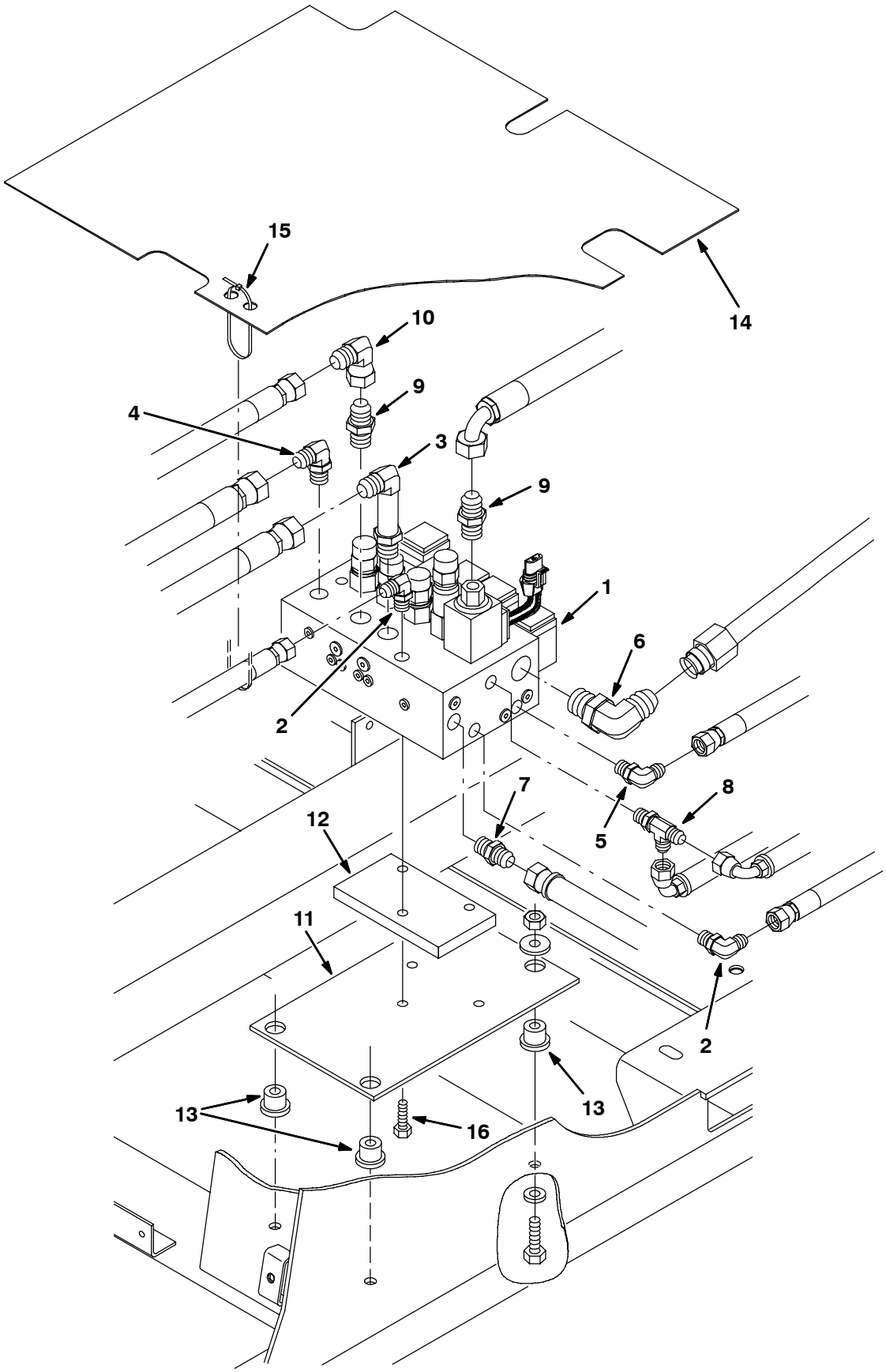

11175 - ALL

Fig. 86 - Scrub Hydraulic Control Solenoid Valve Group

Ref.	Part No.	Serial Number	Description	Qty.
1	84010	(000000-014999)	Valve, Hyd Control Sol (See Breakdowns)	1
1	1032232	(015000-)	Valve, Hyd, Solenoid, 12vdc 0280psi (See Breakdowns)	1
2	77097	(000000-)	Ftg-Hyd E90 Jm04/Om04	2
3	69173	(000000-)	Ftg-Hyd E90 Jm08/Om08	1
4	56820	(000000-)	Ftg-Hyd E90 Jm06/Om06	1
5	82825	(000000-)	Ftg-Hyd E90 Jm04/Om04	1
6	46481	(000000-)	Ftg-Hyd E90 Jm12/Om12	1
7	56690	(000000-)	Ftg-Hyd Str Jm06/Om06	1
8	34390	(000000-)	Ftg-Hyd Tee Jm04Jmom	1
9	44869	(000000-)	Ftg-Hyd Str Jm08/Om08	2
10	17980	(000000-)	Ftg-Hyd E90 Jm08/Jf08	1
11	77260	(000000-)	Plate, Mounting, Valve	1
12	374725	(000000-)	Block, Mtg, Spacer, Plstc	1
13	54274	(000000-)	Isolator-Vibration,125Lb.Ratng	3
14	374586	(012504–)	Shield, Hyd Solenoid	1
15	49266	(012504–)	Tie, Cable 1.75D Max 7.50Lg	1
16	59658	(000000-)	Screw, Hex, M08 X 1.25 X 35, Ss, Nl	3

Fig. 87 - Scrub Right Side Squeegee Group

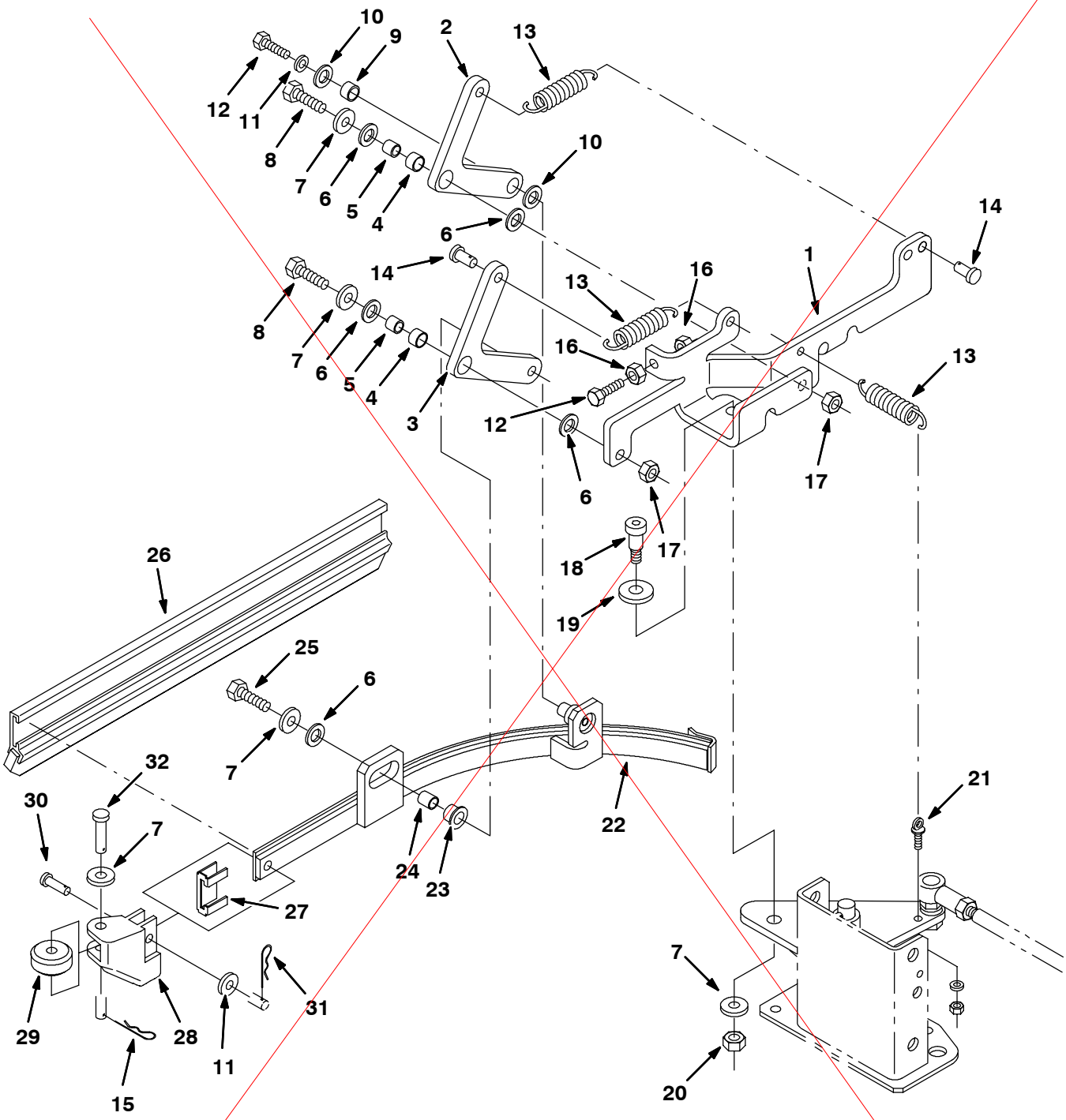

See insert for updated pages that show
correct illustration and B/M for squeegee assemblies

11073 - ALL

Fig. 87 - Scrub Right Side Squeegee Group

Ref.	Part No.	Serial Number	Description	Qty.
	84118	(000000-)	Squeegee Assy, Rh 8410	1
1	83568	(000000-)	Bracket, Pivot, Sq Lift Rh	1
2	83564	(000000-)	Arm, Squeegee Lift Rear	1
3	83565	(000000-)	Arm, Squeegee Lift Front	1
4	71607	(000000-)	Bearing, .625B X .38	2
5	71608	(000000-)	Sleeve, Bearing .625Od X .515	2
6	64425	(000000-)	Washer, .656B 1.25D .06	5
7	01686	(000000-)	Washer Flt .38 Ss	5
8	77347	(000000-)	Screw Hexssm10X1.5 35	2
9	64173AM	(000000-)	Bushing, Sleeve, 0.50b 0.59d 0.38l, Stl	1
10	86860	(000000-)	Bearing, Thrust .500	2
11	01685	(000000-)	Washer Flt .31 Ss	2
12	09011	(000000-)	Scr Hexssm 8X1.25 30	2
13	87816	(000000-)	Spring, Extension	3
14	41305	(000000-)	Pin Clevis 0.37 Dia X 0.75 Lg	2
15	08085	(000000-)	Pin Hair Cotter .056Dx1.1L	1
16	07786	(000000-)	Nut Hx Ss M 8X1.25	2
17	08714	(000000-)	Nut-Hxlocnyln M10X1.5 Reg 18-8	2
18	33123	(000000-)	Scr-Shld .50Odx0.75L .38-16	1
19	41619	(000000-)	Washer Flt .50 Ss	1
20	36643	(000000-)	Nut-Hxlocnyln .38-16 Thin Pltd	1
21	48079	(000000-)	Bolt-Eye, .25-20Th .25B 1.4L	1
22	84093	(000000-)	Frame Wldt, Squeegee Rh	1
23	25730	(000000-)	Bearing, Flange .625B X .50	1
24	25736AM	(000000-)	Tube, 0.62d 0.41b 0.6l, Ss, Cham	1
25	12317	(000000-)	Scr Hexssm10X1.5 30	1
26	72934	(000000-)	Blade Assy, Squeegee, Side, Rh	1
27	86759	(000000-)	Retainer, Squeegee	1
28	77333	(000000-)	Guide, Side Squeegee	1
29	77331	(000000-)	Roller, Side Squeegee	1
30	69582	(000000-)	Pin,Clevis,0.31 Dia X 1.00 Lg	1
31	86866	(000000-)	Pin, Hair Cotter .375D .072Wir	1
32	29558	(000000-)	Pin,Clevis,0.37 Dia.X 1.50 Lg	1

See insert for updated pages that show
correct illustration and B/M for squeegee assemblies

Fig. 87 - Scrub Right Side Squeegee Group

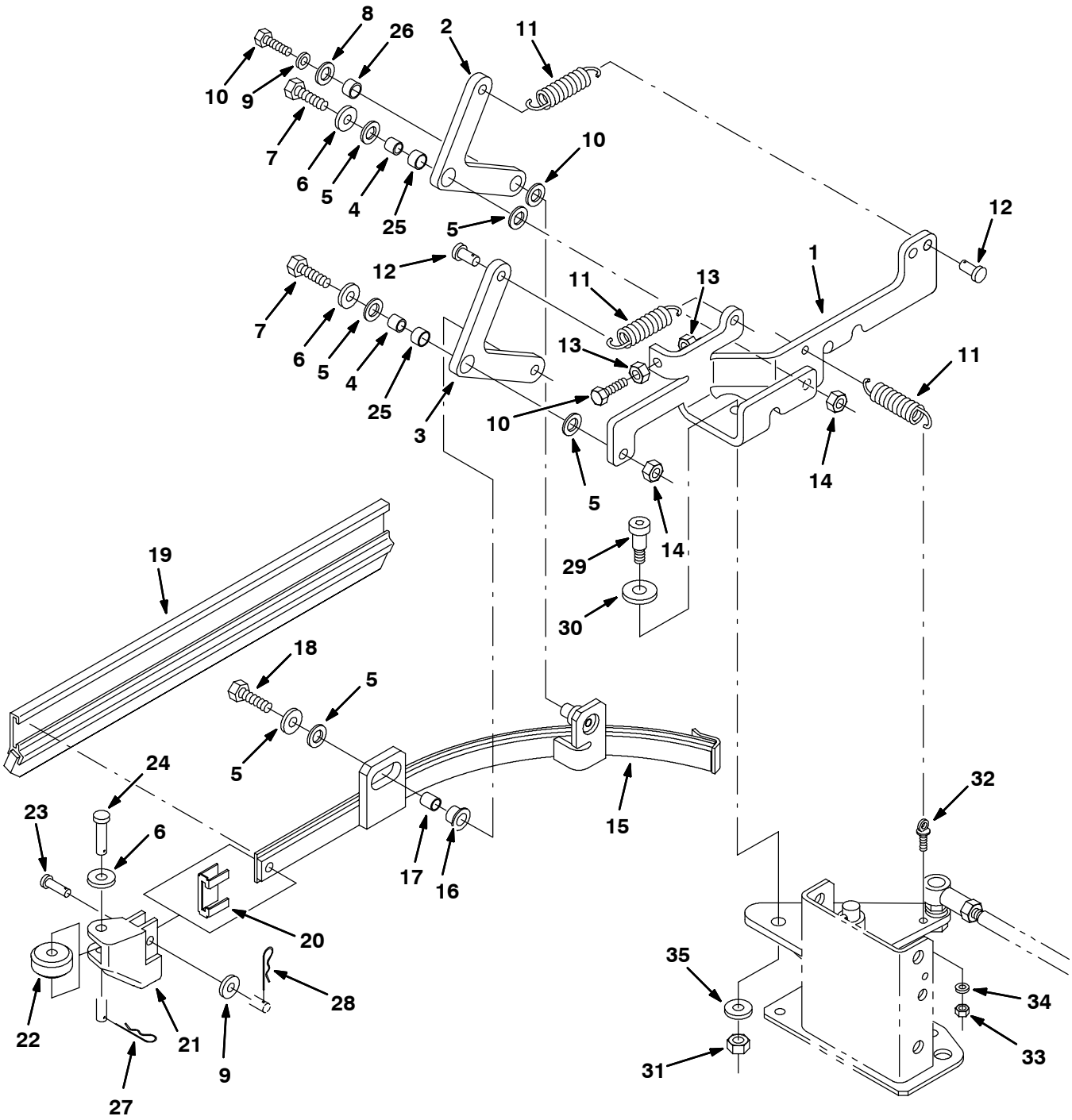

11073 - ALL

Fig. 87 - Scrub Right Side Squeegee Group

	Ref.	Part No.	Serial Number	Description	Qty.
▽		84118	(000000-)	Squeegee Assy, Rh 8410	1
▲	1	83568	(000000-)	Bracket, Pivot, Sq Lift Rh	1
▲	2	83564	(000000-)	Arm, Squeegee Lift Rear	1
▲	3	83565	(000000-)	Arm, Squeegee Lift Front	1
▲	4	71608	(000000-)	Sleeve, Bearing .625Od X .515	2
▲	5	64425	(000000-)	Washer, .656B 1.25D .06	5
▲	6	01686	(000000-)	Washer Flt .38 Ss	4
▲	7	77347	(000000-)	Screw Hexssm10X1.5 35	2
▲	8	86860	(000000-)	Bearing, Thrust .500	2
▲	9	01685	(000000-)	Washer Flt .31 Ss	2
▲	10	09011	(000000-)	Scr Hexssm 8X1.25 30	2
▲	11	87816	(000000-)	Spring, Extension	3
▲	12	41305	(000000-)	Pin Clevis 0.37 Dia X 0.75 Lg	2
▲	13	07786	(000000-)	Nut Hx Ss M 8X1.25	2
▲	14	08714	(000000-)	Nut-Hxlocnyln M10X1.5 Reg 18-8	2
▲	15	84093	(000000-)	Frame Wldt, Squeegee Rh	1
▲	16	25730	(000000-)	Bearing, Flange .625B X .50	1
▲	17	25736AM	(000000-)	Tube, 0.62d 0.41b 0.6l, Ss, Cham	1
▲	18	12317	(000000-)	Scr Hexssm10X1.5 30	1
▲	19	72934	(000000-)	Blade Assy, Squeegee, Side, Rh	1
▲	20	86759	(000000-)	Retainer, Squeegee	1
▲	21	77333	(000000-)	Guide, Side Squeegee	1
▲	22	77331	(000000-)	Roller, Side Squeegee	1
▲	23	69582	(000000-)	Pin,Clevis,0.31 Dia X 1.00 Lg	1
▲	24	29558	(000000-)	Pin,Clevis,0.37 Dia.X 1.50 Lg	1
	25	71607	(000000-)	Bearing, .625B X .38	2
	26	64173AM	(000000-)	Bushing, Sleeve, 0.50b 0.59d 0.38l, Stl	1
	27	08085	(000000-)	Pin Hair Cotter .056Dx1.1L	1
	28	86866	(000000-)	Pin, Hair Cotter .375D .072Wir	1
	29	33123	(000000-)	Scr-Shld .50Odx0.75L .38-16	1
	30	41619	(000000-)	Washer Flt .50 Ss	1
	31	36643	(000000-)	Nut-Hxlocnyln .38-16 Thin Pltd	1
	32	48079	(000000-)	Bolt-Eye, .25-20Th .25B 1.4L	1
	33	41169	(000000-)	Nut, Hex, Lock, .25-20, Nl, Ss	1
	34	32483	(000000-)	Washer, Flat, 0.25, Sae	1
	35	01686	(000000-)	Washer Flt .38 Ss	1

Fig. 88 - Scrub Left Side Squeegee Group

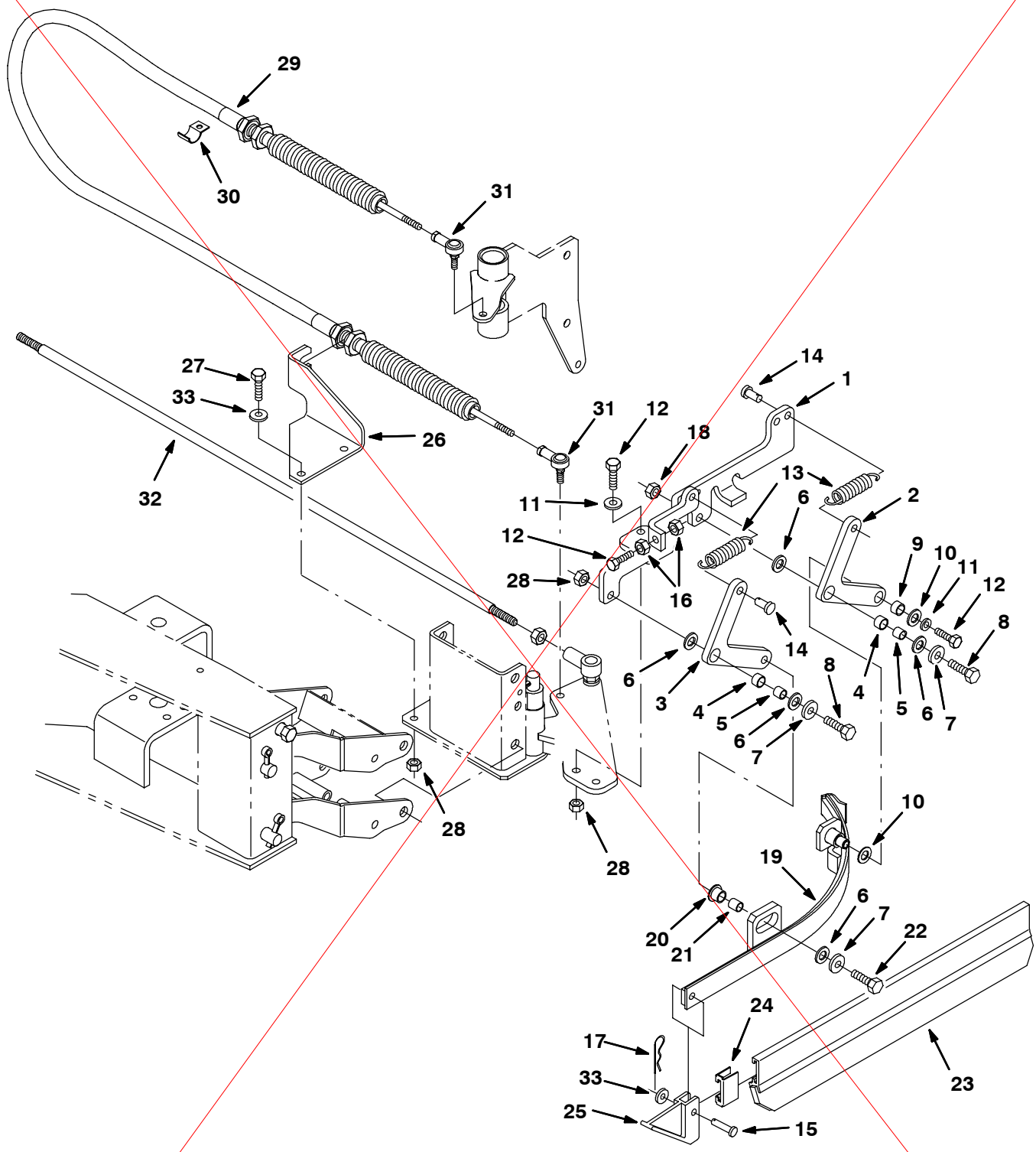

See insert for updated pages that show
correct illustration and B/M for squeegee assemblies

11075 - ALL

Fig. 88 - Scrub Left Side Squeegee Group

Ref.	Part No.	Serial Number	Description	Qty.
	84116	(000000-)	Squeegee Assy, Lh 8410	1
1	83569	(000000-)	Bracket, Pivot, Sq Lift Lh	1
2	83564	(000000-)	Arm, Squeegee Lift Rear	1
3	83565	(000000-)	Arm, Squeegee Lift Front	1
4	71607	(000000-)	Bearing, .625B X .38	2
5	71608	(000000-)	Sleeve, Bearing .625Od X .515	2
6	64425	(000000-)	Washer, .656B 1.25D .06	5
7	01686	(000000-)	Washer Flt .38 Ss	3
8	77347	(000000-)	Screw Hexssm10X1.5 35	2
9	64173AM	(000000-)	Bushing, Sleeve, 0.50b 0.59d 0.38l, St	1
10	86860	(000000-)	Bearing, Thrust .500	2
11	01685	(000000-)	Washer Flt .31 Ss	3
12	09011	(000000-)	Scr Hexssm 8X1.25 30	4
13	87816	(000000-)	Spring, Extension	2
14	41305	(000000-)	Pin Clevis 0.37 Dia X 0.75 Lg	2
15	69582	(000000-)	Pin,Clevis,0.31 Dia X 1.00 Lg	1
16	07786	(000000-)	Nut Hx Ss M 8X1.25	2
17	86866	(000000-)	Pin, Hair Cotter .375D .072Wir	1
18	08714	(000000-)	Nut-Hxlocnyln M10X1.5 Reg 18-8	2
19	84092	(000000-)	Frame Wldt, Squeegee Lh	1
20	25730	(000000-)	Bearing, Flange .625B X .50	1
21	25736AM	(000000-)	Tube, 0.62d 0.41b 0.6l, Ss, Cham	1
22	12317	(000000-)	Scr Hexssm10X1.5 30	1
23	72934	(000000-)	Blade Assy, Squeegee, Side, Rh	1
24	86759	(000000-)	Retainer, Squeegee	1
25	86865	(000000-)	Guide, Side Squeegee	1
26	72864	(000000-)	Bracket, Support, Cable	1
27	09010	(000000-)	Scr Hexssm 8X1.25 25	2
28	08713	(000000-)	Nut-Hxlocnyln M 8X1.25 Reg Ss	4
29	72837	(000000-)	Cable, Push/Pull	1
30	15128-1	(000000-)	Clamp-Conduit, 1 Hole 0.50Dia	1
31	36466	(000000-)	Rod End .312-24 W/Stud	2
32	72838	(000000-)	Rod, Tie, Squeegee	1
33	01685	(000000-)	Washer Flt .31 Ss	2

See insert for updated pages that show
correct illustration and B/M for squeegee assemblies

Fig. 88 - Scrub Left Side Squeegee Group

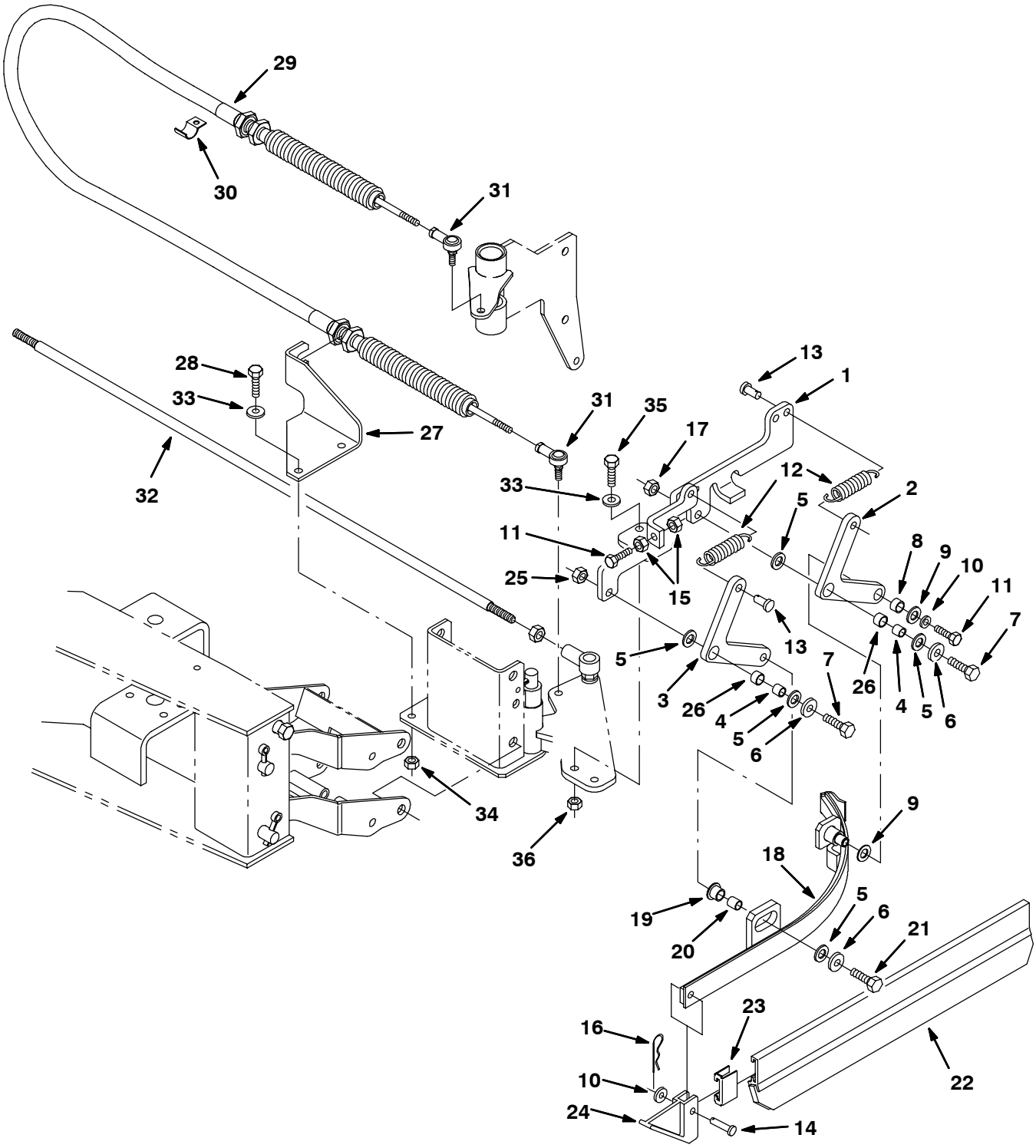

11075 - ALL

Fig. 88 - Scrub Left Side Squeegee Group

	Ref.	Part No.	Serial Number	Description	Qty.
▽		84116	(000000-)	Squeegee Assy, Lh 8410	1
▲	1	83569	(000000-)	Bracket, Pivot, Sq Lift Lh	1
▲	2	83564	(000000-)	Arm, Squeegee Lift Rear	1
▲	3	83565	(000000-)	Arm, Squeegee Lift Front	1
▲	4	71608	(000000-)	Sleeve, Bearing .625Od X .515	2
▲	5	64425	(000000-)	Washer, .656B 1.25D .06	5
▲	6	01686	(000000-)	Washer Flt .38 Ss	3
▲	7	77347	(000000-)	Screw Hexssm10X1.5 35	2
▲	8	64173AM	(000000-)	Bushing, Sleeve, 0.50b 0.59d 0.38l, St	1
▲	9	86860	(000000-)	Bearing, Thrust .500	2
▲	10	01685	(000000-)	Washer Flt .31 Ss	2
▲	11	09011	(000000-)	Scr Hexssm 8X1.25 30	2
▲	12	87816	(000000-)	Spring, Extension	2
▲	13	41305	(000000-)	Pin Clevis 0.37 Dia X 0.75 Lg	2
▲	14	69582	(000000-)	Pin,Clevis,0.31 Dia X 1.00 Lg	1
▲	15	07786	(000000-)	Nut Hx Ss M 8X1.25	2
▲	16	86866	(000000-)	Pin, Hair Cotter .375D .072Wir	1
▲	17	08714	(000000-)	Nut-Hxlocnyln M10X1.5 Reg 18-8	2
▲	18	84092	(000000-)	Frame Wldt, Squeegee Lh	1
▲	19	25730	(000000-)	Bearing, Flange .625B X .50	1
▲	20	25736AM	(000000-)	Tube, 0.62d 0.41b 0.6l, Ss, Cham	1
▲	21	12317	(000000-)	Scr Hexssm10X1.5 30	1
▲	22	72934	(000000-)	Blade Assy, Squeegee, Side, Rh	1
▲	23	86759	(000000-)	Retainer, Squeegee	1
▲	24	86865	(000000-)	Guide, Side Squeegee	1
▲	25	08713	(000000-)	Nut-Hxlocnyln M 8X1.25 Reg Ss	2
	26	71607	(000000-)	Bearing, .625B X .38	2
	27	72864	(000000-)	Bracket, Support, Cable	1
	28	09010	(000000-)	Scr Hexssm 8X1.25 25	2
	29	72837	(000000-)	Cable, Push/Pull	1
	30	15128-1	(000000-)	Clamp-Conduit, 1 Hole 0.50Dia	1
	31	36466	(000000-)	Rod End .312-24 W/Stud	2
	32	72838	(000000-)	Rod, Tie, Squeegee	1
	33	01685	(000000-)	Washer Flt .31 Ss	4
	34	08713	(000000-)	Nut, Hex, Lock, M8 X 1.25, Nl, Ss	2
	35	09011	(000000-)	Screw, Hex, M8 X 1.25 X 30, Ss	2
	36	07786	(000000-)	Nut, Hex, Std, M8 X 1.25, Ss	2

Fig. 89 - Scrub Rear Squeegee Linkage Group

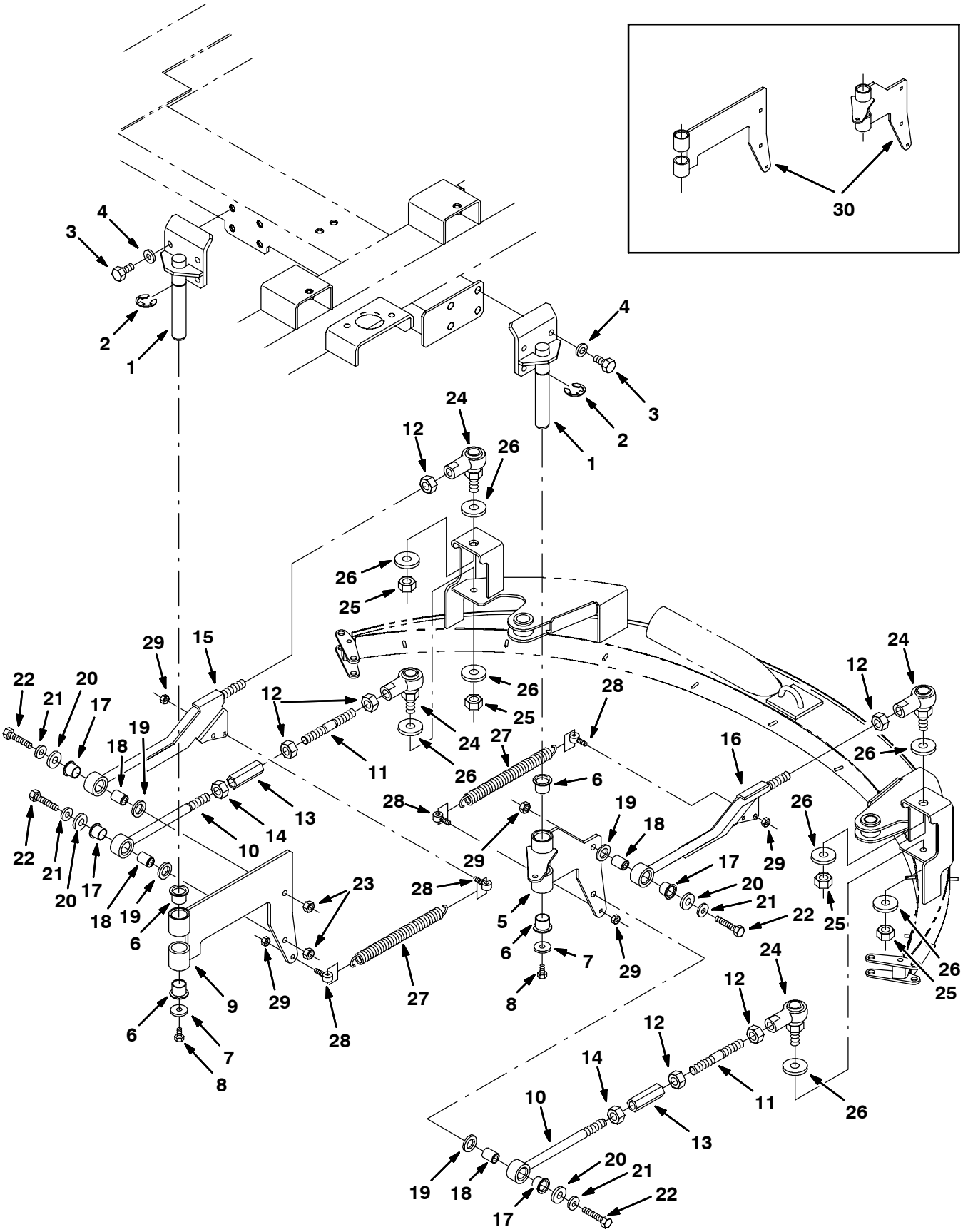

11034 - ALL

Fig. 89 - Scrub Rear Squeegee Linkage Group

Ref.	Part No.	Serial Number	Description	Qty.
1	72715	(000000-)	Pivot Wldt	2
2	23788	(000000-)	Ring,Retain,Ex,0.98Od,E-Ring	2
3	09028	(000000-)	Scr Hexssm 10X1.5 25	8
4	41187	(000000-)	Washer-Belleville .38 Pltd	8
5	385423	(012479-)	Link Wldt, Squeegee, Lh	1
6	54618AM	(000000-)	Bearing, Flange, 1.00 Bore	4
7	32662	(000000-)	Washer .380B 1.22D .06 Ss18-8	2
8	49826	(000000-)	Scr-Hexssm 8X1.25 16 Nylon Loc	2
9	385421	(012479-)	Link Wldt, Squeegee, Rh	1
10	73375	(000000-)	Arm Wldt, Bottom	2
11	77224	(000000-)	Arm	2
12	77276	(000000-)	Nut-Hx Jam .62-18	8
13	72919	(000000-)	Turnbuckle	2
14	77277	(000000-)	Nut-Hx Jam .62-18Left Ss18-8	2
15	73372	(000000-)	Arm Wldt, Top, Rh	1
16	77273	(000000-)	Arm Wldt, Top, Lh	1
17	72763	(000000-)	Bearing, Flange, .750 Bore	4
18	73370	(000000-)	Sleeve, .414B .74D .92 Stl	4
19	04846	(000000-)	Washer, Thrust	4
20	41619	(000000-)	Washer Flt .50 Ss	4
21	01686	(000000-)	Washer Flt .38 Ss	4
22	32731	(000000-)	Scr Hexssm10X1.5	4
23	08714	(000000-)	Nut-Hxlocnyln M10X1.5 Reg 18-8	4
24	77275	(000000-)	Balljoint, Rod End 5/8-18	4
25	40814	(000000-)	Nut-Hxlocnyln .62-18 Thin Pltd	4
26	32494	(000000-)	Washer Flt .62 Hard	8
27	46785-1	(000000-)	Sprng,Tens,0.87Odx.13Wire 9.0L	2
28	69998	(000000-)	Bolt-Eye, M 8X1.25 .328 1.18L	4
29	08713	(000000-)	Nut-Hxlocnyln M 8X1.25 Reg Ss	4
30	385427	(000000-012478)	Kit, Replmt, Pivot, Squeegee	1

Fig. 90 - Scrub Rear Squeegee Lift Group

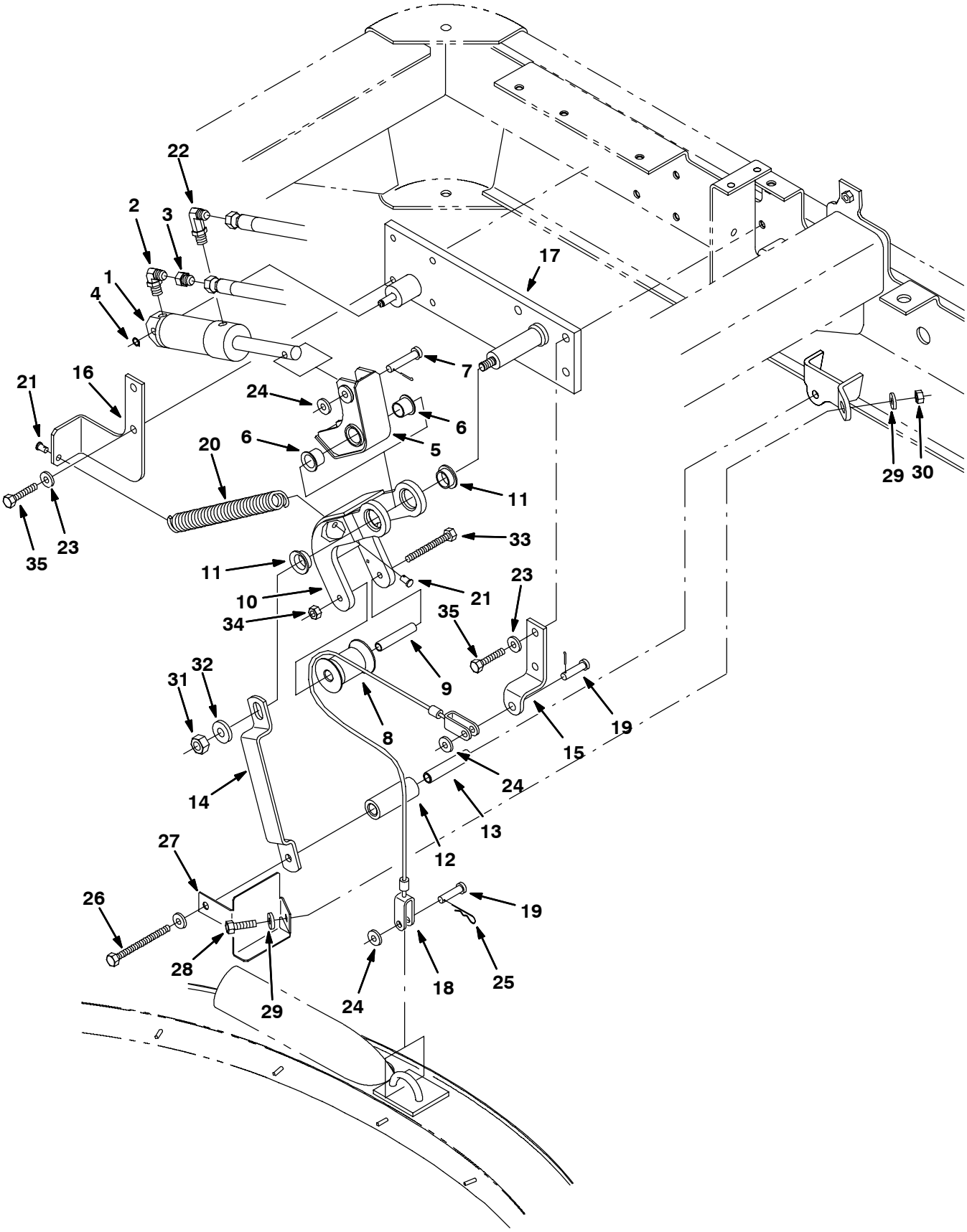

11032 - ALL

Fig. 90 - Scrub Rear Squeegee Lift Group

	Ref.	Part No.	Serial Number	Description	Qty.
	1	73089	(000000-)	Cylinder, Hyd 1.5B 02.8S .2500	1
	2	77097	(000000-)	Ftg-Hyd E90 Jm04/Om04	1
	3	79447	(000000-)	Ftg-Hyd	1
	4	23524-1	(000000-)	Ring,Retain,Ex,0.37Od,Selflock	1
▽	5	83780	(000000-)	Bellcrank Kit, Upper	1
▲	6	56166	(000000-)	Bearing, Flange	2
	7	222260	(000000-)	Pin, Clevis, 0.37 Dia 2.25Lg	1
	8	83749	(000000-)	Roller, Thimble	1
	9	83756	(000000-)	Sleeve, Roller	1
▽	10	83781	(000000-)	Bellcrank Kit, Lower	1
▲	11	83733	(000000-)	Bearing, 1.00 Dia X .38 L	2
	12	23006	(000000-)	Sleeve, Roller	2
	13	23005	(000000-)	Sleeve, Roller	2
	14	23002	(000000-)	Bracket, Gusset, Rear	1
	15	72910	(000000-)	Bracket, Cable Clip	1
	16	23001	(000000-)	Bracket, Spring	1
	17	23004	(000000-)	Pin Wldt	1
	18	10542	(000000-)	Cable	1
	19	86240	(000000-)	Pin Clevis .375 Dia X 1.13 Lg	2
	20	23007	(000000-)	Spring, Extention	1
	21	41305	(000000-)	Pin Clevis 0.37 Dia X 0.75 Lg	2
	22	82825	(000000-)	Ftg-Hyd E90 Jm04/Om04	1
	23	41186	(000000-)	Washer-Belleville .31 Pltd	8
	24	01686	(000000-)	Washer Flt .38 Ss	3
	25	86866	(000000-)	Pin, Hair Cotter .375D .072Wir	1
	26	07819	(000000-)	Screw, Hex, M10 X 1.5 X 130, 8.8	1
	27	1014365	(000000-)	Shield, Tube, Plstc	1
	28	09010	(000000-)	Screw, Hex, M8 X 1.25 X 25, Ss	1
	29	01685	(000000-)	Washer, Flat, 0.31 Ss	2
	30	08713	(000000-)	Nut, Hex, Lock, M8 X 1.25, Nl, Ss	1
	31	08711	(000000-)	Nut, Hex, Lock, M12 X 1.75,Nl	1
	32	32493	(000000-)	Washer, Flat, 0.50 Std	1
	33	06959	(000000-)	Screw, Hex, M8 X 1.25 X 100, 8.8	1
	34	08713	(000000-)	Nut, Hex, Lock, M8 X 1.25, Nl, Ss	1
	35	41342	(000000-)	Screw, Hex, M8 X 1.25 X 40, 8.8	6

Fig. 91 - Scrub Rear Squeegee Frame Group

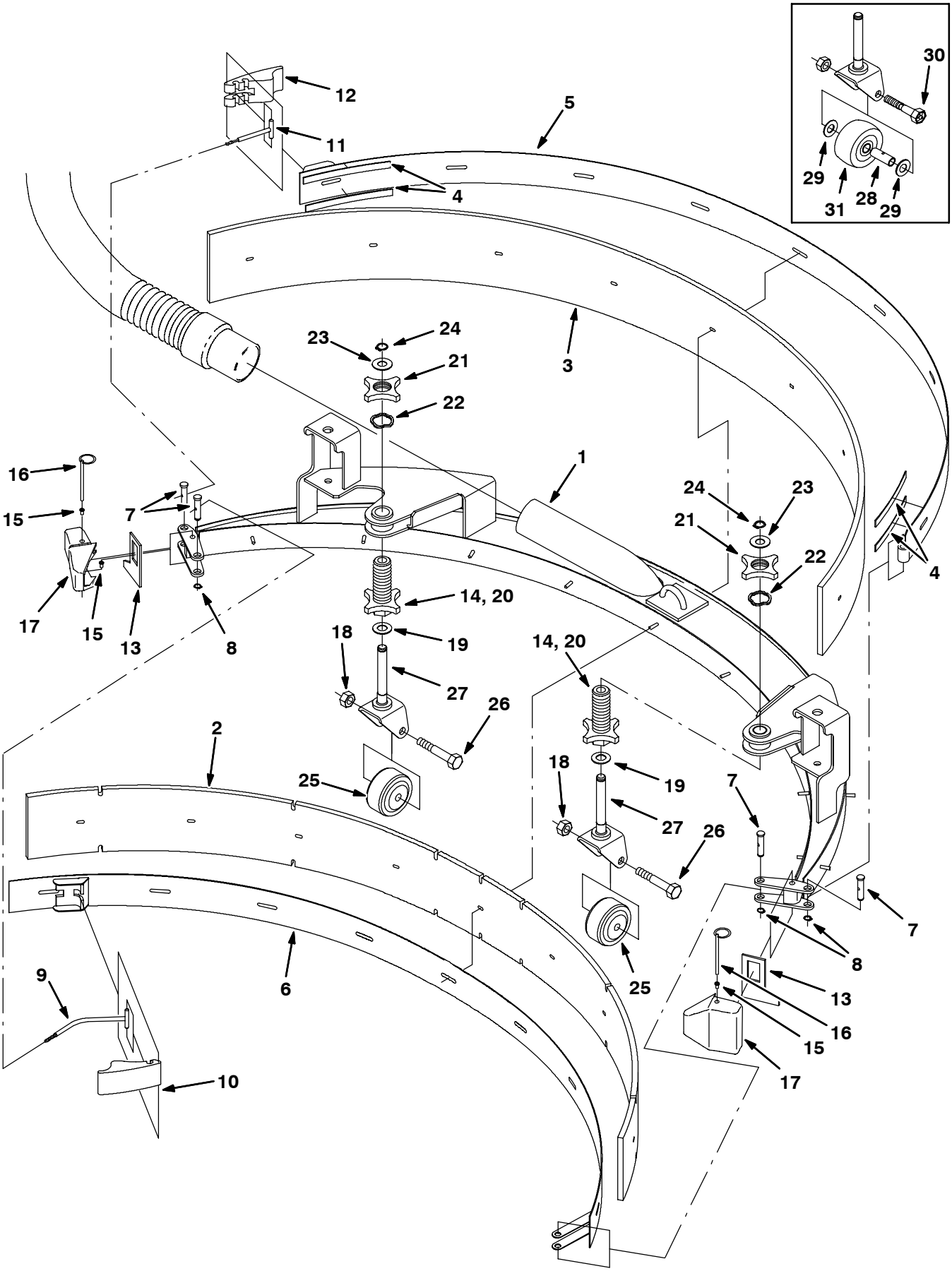

11026 - ALL

Fig. 91 - Scrub Rear Squeegee Frame Group

	Ref.	Part No.	Serial Number	Description	Qty.
▽		83992	(000000–)	Squeegee Kit, Replmt	1
▲	1	83800	(000000–)	Frame, Squeegee	1
▲	2	83809	(000000–)	Blade, Squeegee	1
▲	3	83810	(000000–)	Blade, Squeegee	1
▲	4	03495	(000000–)	Strip, Nonslip	4
▲	5	83804	(000000–)	Strip Wldt, Rear Retainer	1
▲	6	83801	(000000–)	Strip Wldt, Front Retainer	1
▲	7	21603	(000000–)	Pin	4
▲	8	24555	(000000–)	Ring, Retaining, External	4
▲	9	83794	(000000–)	Rod	1
▲	10	21601	(000000–)	Cam	1
▲	11	21606	(000000–)	Pin	1
▲	12	21602	(000000–)	Cam	1
▲	13	83874	(000000–)	Gasket	2
▲	14	77228	(000000–)	Knob, Adj	1
▲▽		21614	(000000–)	Kit, Bumper, Squeegee	1
▲▲	15	79219	(000000–)	Retainer	4
▲▲	16	71199	(000000–)	Pin, Hitch	2
▲▲	17	21586	(000000–)	Bumper, Squeegee	2
▽		78979	(000000–)	Kit, Caster, Squeegee	2
▲	18	02931	(000000–)	Nut, Hex, Lock, .50–13, Nl, Ss	1
▲	19	07450	(000000–)	Bearing, Thrust	1
▲	20	77228	(000000–)	Knob, Adj	1
▲	21	77227	(000000–)	Knob, Jam	1
▲	22	79217	(000000–)	Washer	1
▲	23	77272	(000000–)	Washer	1
▲	24	01516	(000000–)	Ring, Retaining	1
▲	25	20833	(012216–)	Wheel, 3 Inch Dia	1
▲	26	81952	(012216–)	Screw	2
▲	27	84593	(000000–)	Pivot	1
	28	75050	(000000–012215)	Bushing, Spanner	2
	29	64425	(000000–012215)	Washer	4
	30	76943	(000000–012215)	Bolt	2
	31	10165	(000000–012215)	Wheel, 3 Inch Dia.	2

Fig. 92 - Scrub Solution Control Group (000000-013311)

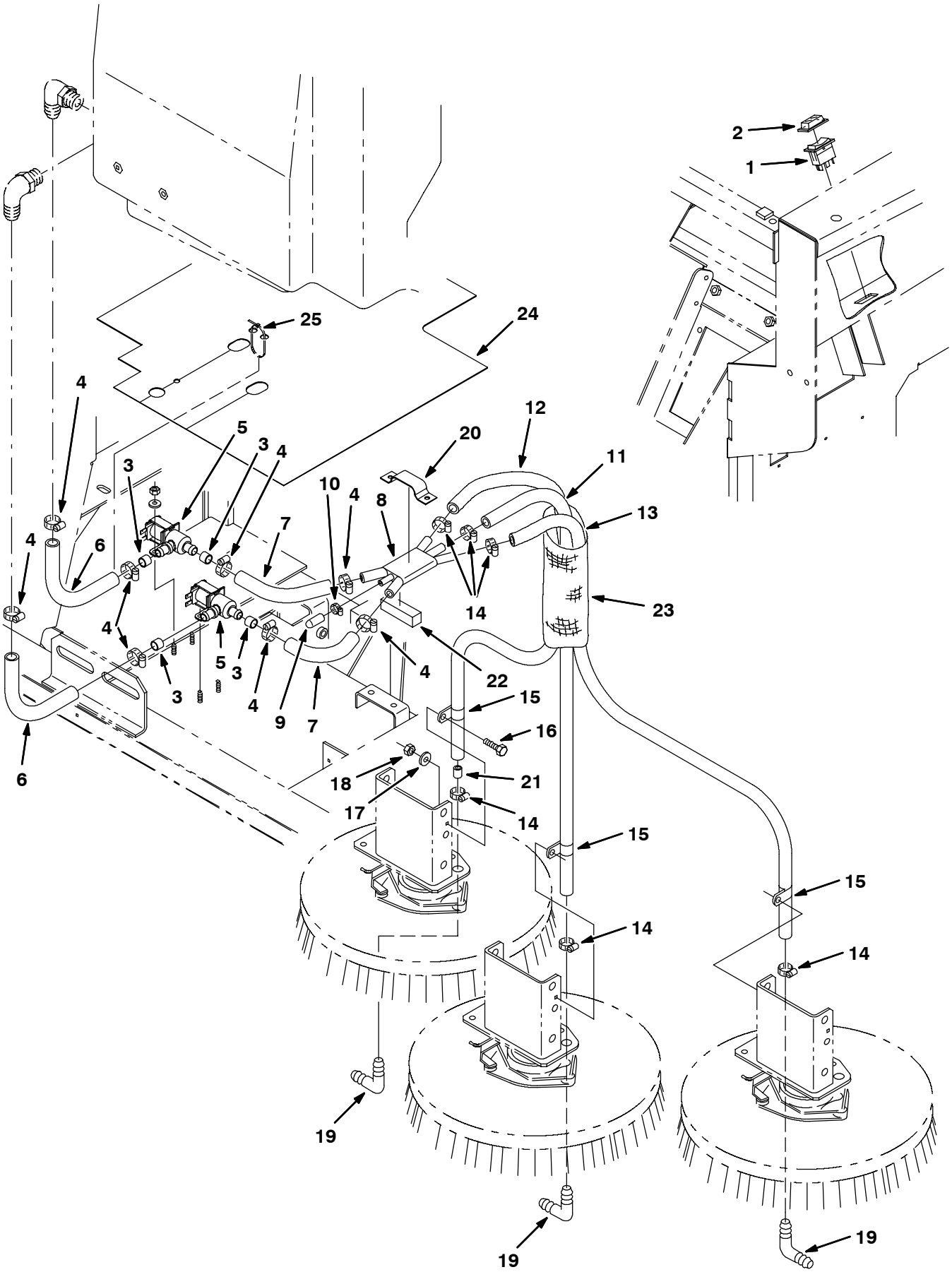

11060 - ALL

Fig. 92 - Scrub Solution Control Group (000000-013311)

Ref.	Part No.	Serial Number	Description	Qty.
1	71665	(000000-013311)	Switch, Progressive	1
2	57807	(000000-013311)	Cover, Rocker Switch Seal	1
3	84095	(000000-013311)	Hose, Vin Clr .5Id .70D .5L	4
4	86824	(000000-013311)	Clamp-Wormdrive 0.50-1.06D	8
5	369850	(000000-013311)	Valve, Water, Sol. 12VOC	2
6	84140	(000000-013311)	Hose, Vinyl	2
7	71425	(000000-013311)	Hose,.62 Idx60.00 Lng Heater	2
8	83630	(000000-013311)	Manifold, Water Distribution	1
9	20806	(000000-013311)	Cap, Neoprene, Black	1
10	43844	(000000-013311)	Clamp-Wormdrive, 0.25- 0.62D	1
11	84056	(000000-013311)	Hose, Vin Wire .51D .70D 30.0L	1
12	65587	(000000-013311)	Hose, Pvc, .50Idx.73Od 34.0Lg	1
13	84057	(000000-013311)	Hose, Vin Wir .5Id .7Od 47.0L	1
14	54333	(000000-013311)	Clamp-Wormdrive, 0.31- 0.88D	6
15	67767	(000000-013311)	Clamp-Cable,.69Dia. 62Wth	3
16	09740	(000000-013311)	Scr Hexssm 8X1.25	3
17	01685	(000000-013311)	Washer Flt .31 Ss	3
18	08713	(000000-013311)	Nut-Hxlocnyln M 8X1.25 Reg Ss	3
19	63987-1	(000000-013311)	Ftg,Plstc,Elb,Barb.50Hs-.50Hse	3
20	84110	(000000-013311)	Bracket, Mounting, Manifold Wa	1
21	77334	(000000-013311)	Fitting, Plastic, Str,Ba.31Id-	1
22	84119	(000000-013311)	Seal, Foam Rbr .8 .8 2.8L	1
23	84121	(000000-013311)	Sleeve, Nyl See60150 #33 14.0L	1
24	374585	(012504-013311)	Shield, Valve, Water (Replaced by 1021095)	1
25	49266	(012504-013311)	Tie, Cable 1.75d Max 7.50lg	1

Fig. 93 - Scrub Solution Control Group (013312-014211)

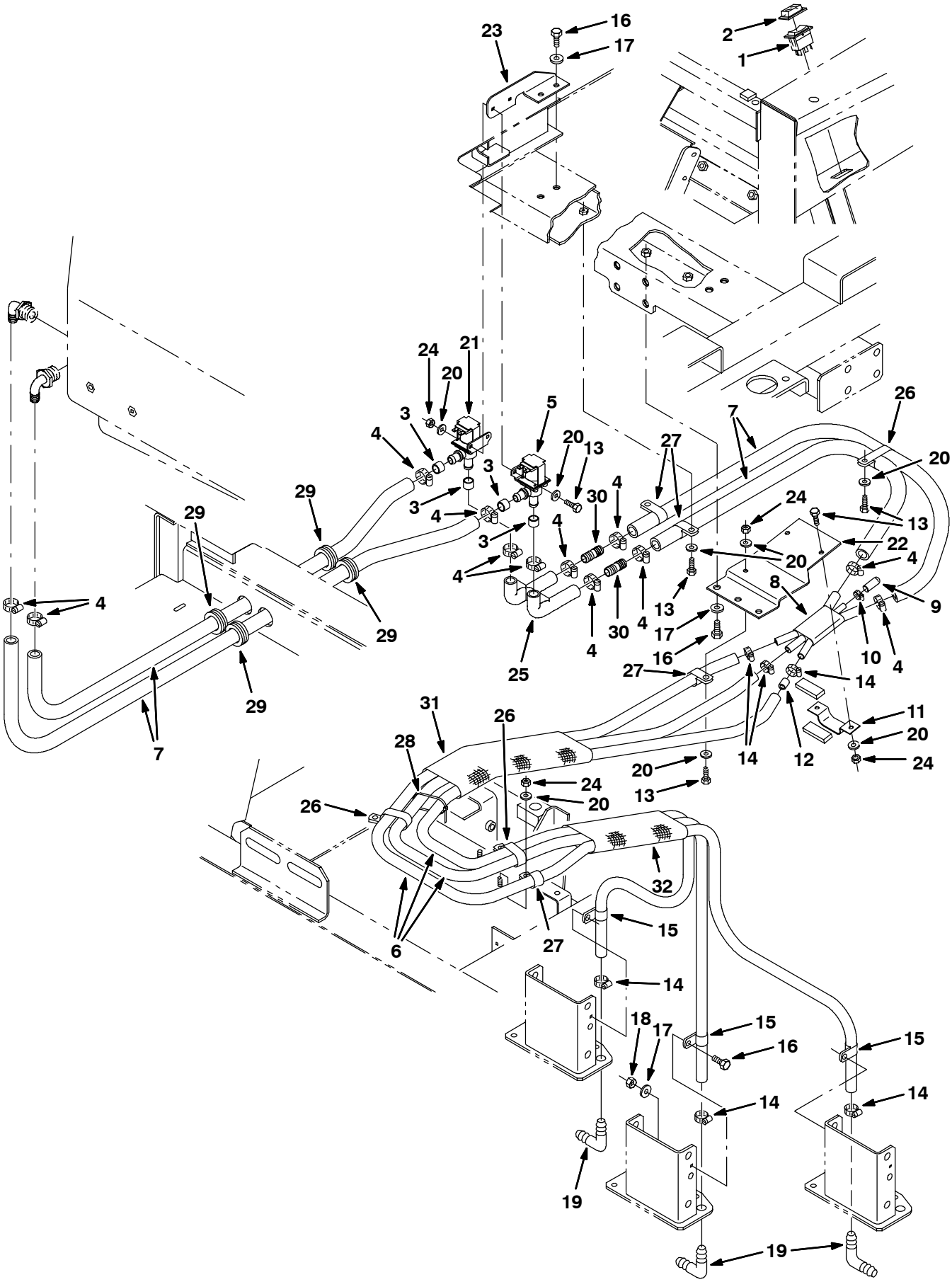

11060 - ALL

Fig. 93 - Scrub Solution Control Group (013312-014211)

Ref.	Part No.	Serial Number	Description	Qty.
1	71665	(013312-014211)	Switch, Progressive	1
2	57807	(013312-014211)	Cover, Rocker Switch Seal	1
3	84095	(013312-014211)	Hose, Vin Clr .5Id .70D .5L	4
4	86824	(013312-014211)	Clamp-Wormdrive 0.50-1.06D	12
5	369850	(013312-014211)	Valve, Water, Sol. 12VOC	1
6	374701	(013312-014211)	Hose, Pvc, Wir, 0.50id	3
7	374700	(013312-014211)	Hose, Pvc, Brd, 0.62id	4
8	83630	(013312-014211)	Manifold, Water Distribution	1
9	20806	(013312-014211)	Cap, Neoprene, Black	1
10	43844	(013312-014211)	Clamp-Wormdrive, 0.25- 0.62D	1
11	84110	(013312-014211)	Bracket, Mtg, Manifold, Water	1
12	77334	(013312-014211)	Fitting, Plastic, Str,Ba.31Id	1
13	08716	(013312-014211)	Screw, Hex, M 6 X 1.0 X 20, Ss	8
14	54333	(013312-014211)	Clamp-Wormdrive, 0.31- 0.88D	6
15	67767	(013312-014211)	Clamp-Cable,.69Dia. 62Wth	3
16	09740	(013312-014211)	Scr Hexssm 8X1.25 X 20	7
17	01685	(013312-014211)	Washer Flt .31 Ss	7
18	08713	(013312-014211)	Nut-Hxlocnyln M 8X1.25 Reg Ss	3
19	63987-1	(013312-014211)	Ftg,Plstc,Elb,Barb.50Hs-.50Hse	3
20	01684	(013312-014211)	Washer, Flat, 0.25 Ss	14
21	374704	(013312-014211)	Valve, Solenoid, Water Flow, 12vdc	1
22	374712	(013312-014211)	Bracket, Mtg, Manifold, Soltn	1
23	374724	(013312-014211)	Bracket, Mtg, Valve, Soltn	1
24	08708	(013312-014211)	Nut, Hex, Lock, M 6 X 1.0, Nl	8
25	1001303	(013312-014211)	Manifold, Soltn Cntrl	1
26	09570	(013312-014211)	Clamp, Cable, Stl, 0.9x1.8x0.62w, 1h	3
27	69234	(013312-014211)	Clamp, Cable, Stl, 1.00d X 0.62w, 1h	5
28	49266	(013312-014211)	Tie, Cable, Nyl, 07.3l .19w 1.8 Max D	1
29	10632-1	(013312-014211)	Grommet, Rbr, 1.06id, F/ 1.4h, .19matl	4
30	365164	(013312-014211)	Fitting, Plstc, Str, Bm10/Bm10	2
31	57224	(013312-014211)	Sleeve, Nyl, #37 16.0l	1
32	84121	(013312-014211)	Sleeve, Nyl, #33 14.0l	1

Fig. 94 - Scrub Solution Control Group (014212-)

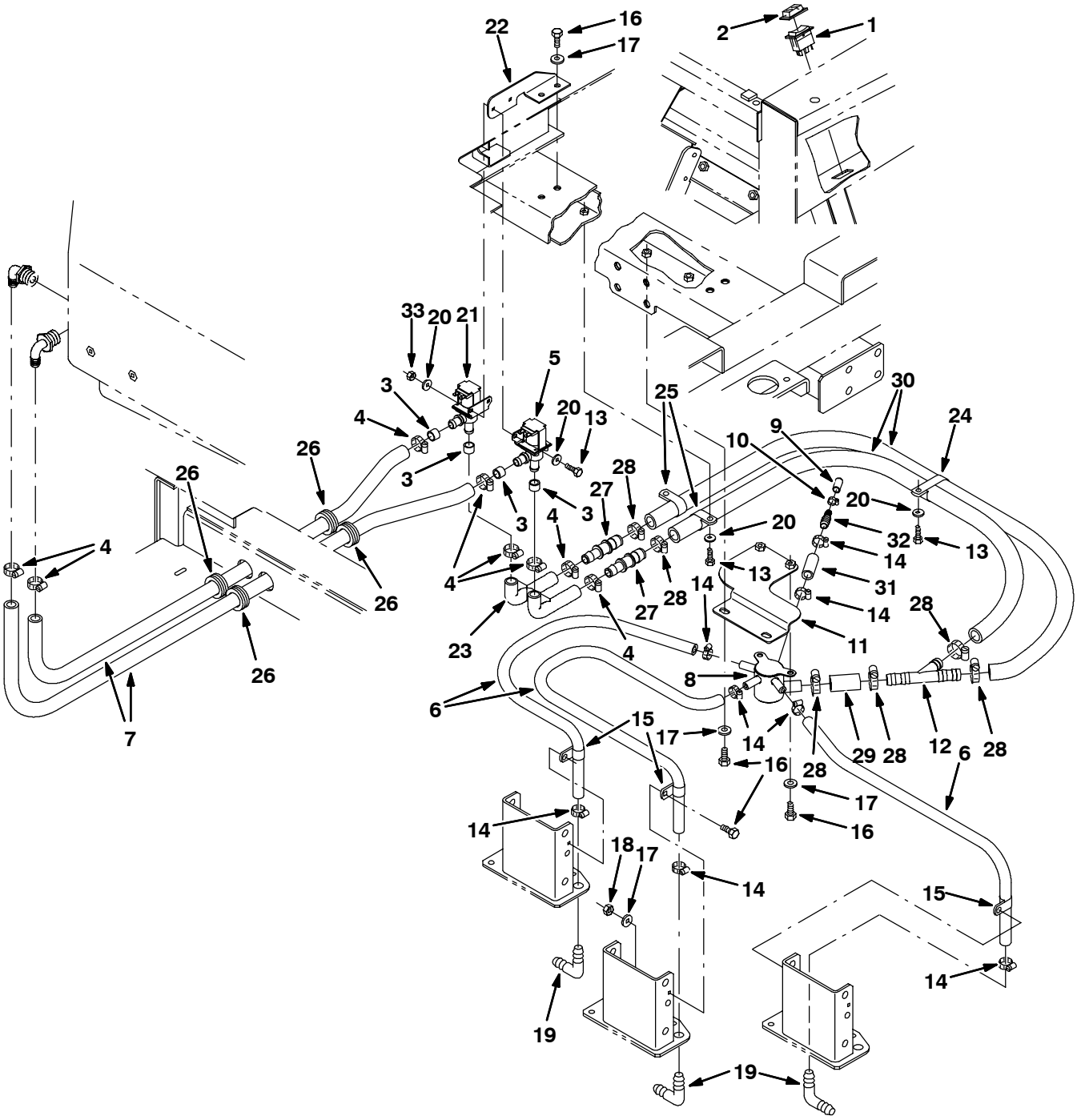

11060 - ALL

Fig. 94 - Scrub Solution Control Group (014212-)

Ref.	Part No.	Serial Number	Description	Qty.
1	71665	(014212-)	Switch, Progressive	1
2	57807	(014212-)	Cover, Rocker Switch Seal	1
3	84095	(014212-)	Hose, Vin Clr .5Id .70D .5L	4
4	86824	(014212-)	Clamp-Wormdrive 0.50-1.06D	8
5	369850	(014212-)	Valve, Water, Sol. 12VOC	1
6	1024237	(014212-)	Hose, Pvc, Wir, 0.50id	3
7	1015032	(014212-)	Hose, Pvc, Brd, 0.62id	1
8	1023491	(014212-)	Manifold, Water Distribution	1
9	20806	(014212-)	Cap, Neoprene, Black	1
10	43844	(014212-)	Clamp-Wormdrive, 0.25- 0.62D	1
11	1022148	(014212-)	Bracket, Mtg, Manifold, Water	1
12	393255	(014212-)	Fitting, Plastic, Str,Ba.31Id	1
13	08716	(014212-)	Screw, Hex, M 6 X 1.0 X 20, Ss	5
14	54333	(014212-)	Clamp-Wormdrive, 0.31- 0.88D	8
15	67767	(014212-)	Clamp-Cable,.69Dia. 62Wth	3
16	09740	(014212-)	Scr Hexssm 8X1.25 X 20	9
17	01685	(014212-)	Washer Flt .31 Ss	9
18	08713	(014212-)	Nut-Hxlocnyln M 8X1.25 Reg Ss	3
19	63987-1	(014212-)	Ftg,Plstc,Elb,Barb.50Hs-.50Hse	3
20	01684	(014212-)	Washer, Flat, 0.25 Ss	7
21	374704	(014212-)	Valve, Solenoid, Water Flow, 12vdc	1
22	374724	(014212-)	Bracket, Mtg, Valve, Soltn	1
23	1001303	(014212-)	Manifold, Soltn Cntrl	1
24	67366	(014212-)	Clamp, Cable, Stl, 1.0x2.0x0.62w, 1h	1
25	53466	(014212-)	Clamp, Cable, Stl, 1.50d X 1.00w, 1h	2
26	10632-1	(014212-)	Grommet, Rbr, 1.06id, F/ 1.4h, .19matl	4
27	363543	(014212-)	Fitting, Plstc, Str, Bm10/Bm10	2
28	11399	(014212-)	Clamp, Hose, Wormdrive, 0.81-1.50d, .56w	6
29	1015048	(014212-)	Hose, Afmkt, Pvc, Brd 0.75id 1ft	1
30	1006410	(014212-)	Hose, Afmkt, Pvc, Brd 0.75id 3ft	2
31	1024020	(014212-)	Hose, Afmkt, Pvc, Wir, 0.50 Id 1ft	1
32	222375	(014212-)	Fitting, Plstc, Str, Bm06/Bm08	1
33	08708	(014212-)	Nut, Hex, Lock, M6 X 1.0, Nl	2

Fig. 95 - Scrub Solution Tank Group

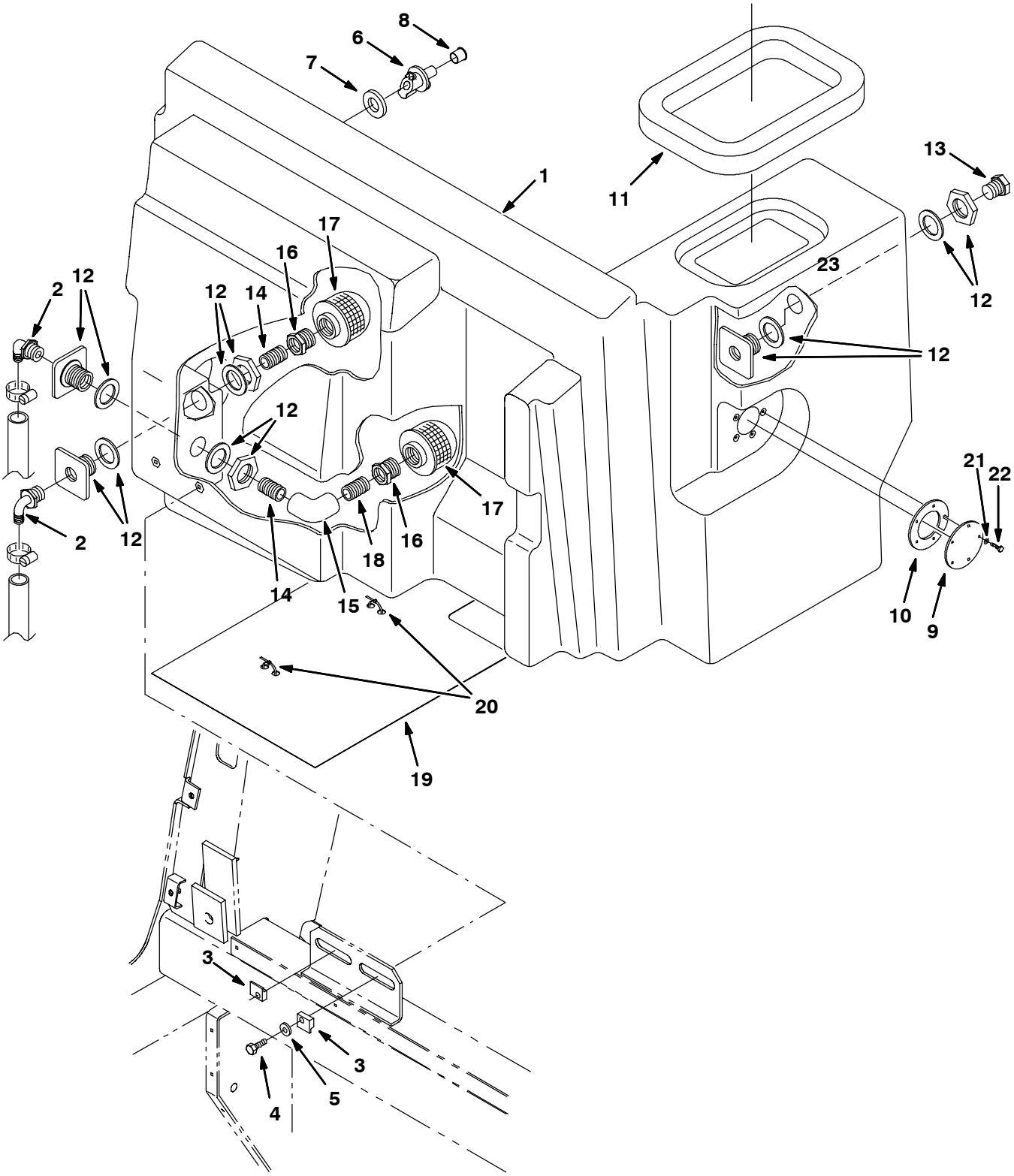

11049 - 8410, NA

Fig. 95 - Scrub Solution Tank Group

Ref.	Part No.	Serial Number	Description	Qty.
1	73034	(000000-)	Tank, Solution, W/Label	1
2	73468	(000000-)	Fitting-Pls E90	2
3	73142	(000000-)	Clamp, Mtg, Tank	2
4	12273	(000000-)	Scr-Hexssm 8X1.25 20 Nylnloc	4
5	01685	(000000-)	Washer Flt .31 Ss	4
6	78840	(000000-)	Valve, Check	1
7	73342	(000000-)	Gasket, Check Valve	1
8	78740	(000000-)	Plug, Cap, Check Valve	1
9	86755	(000000-)	Cap, Plate	1
10	86591	(000000-)	Gasket	1
11	83872	(000000-)	Gasket, Tank	1
12	77343	(000000-)	Fitting-Plastic Str Blkhd 12Pf	3
13	75611	(000000-)	Ftg-Plug Npt 12Pm Rd Hd Plstc.	1
14	69784	(000000-)	Ftg,Plstc,Nip. 0.75Ptx 1.68Lg	3
15	23271	(000000-)	Ftg-Plstc E90 12Pf/12Pf	1
16	20811	(000000-)	Fitting, Plastic Str 12Pf/16Pm	2
17	20810	(000000-)	Strainer, Screen,Solution Tank	2
18	385665	(000000-)	Fitting-Plastic Str.	1
19	1021095	(012504-)	Shield, Water Valve	1
20	49266	(012504-)	Tie, Cable 1.75d Max 7.50lg	2
21	32980	(000000-)	Washer, Lock, Int, #10	5
22	06933	(000000-)	Screw, Pan, M5 X 0.8 X 16, 4.8	5

Fig. 96 - Scrub Recovery Tank Group

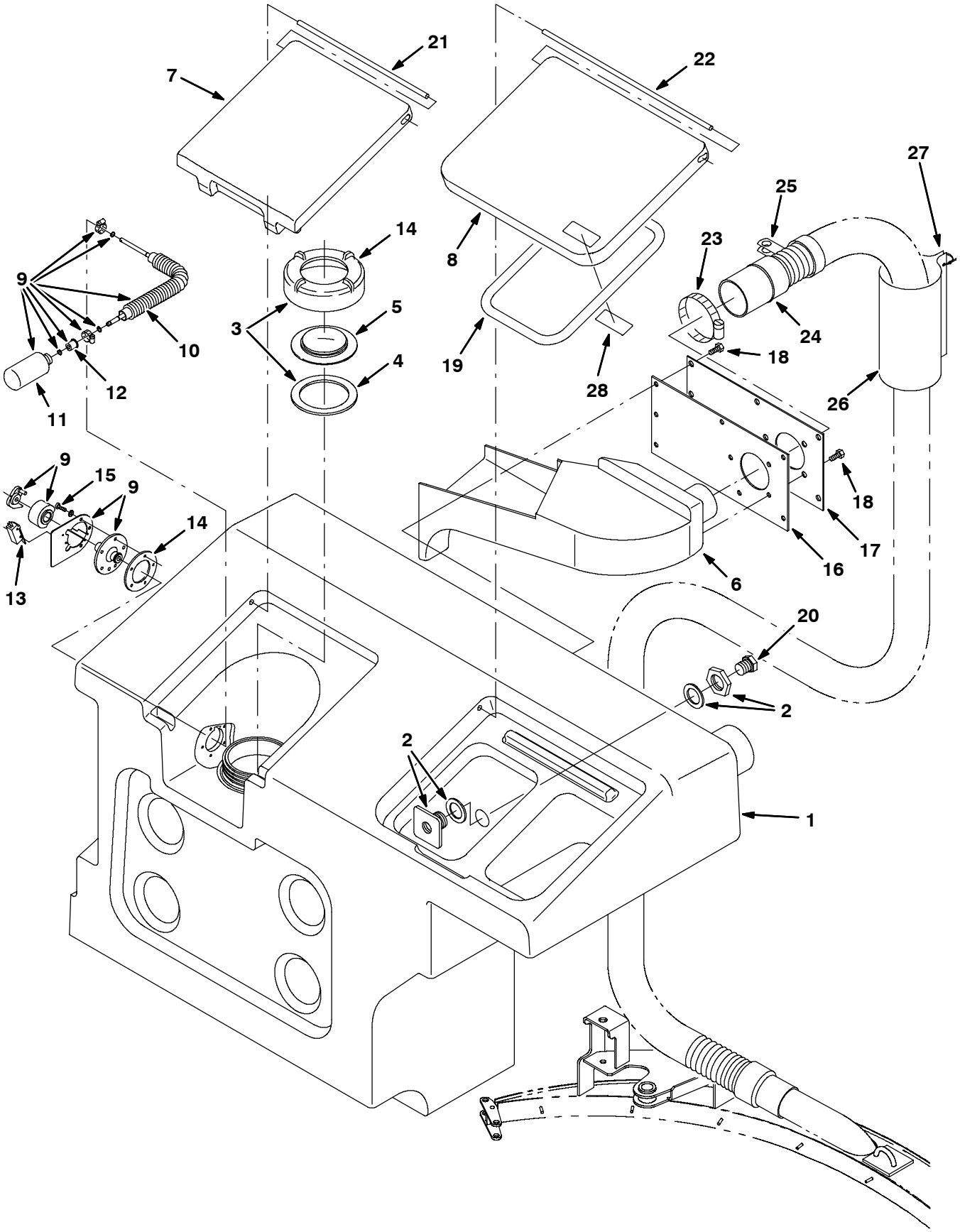

11044 - ALL

Fig. 96 - Scrub Recovery Tank Group

	Ref.	Part No.	Serial Number	Description	Qty.
	1	23090	(000000-)	Tank Recovery	1
	2	77343	(000000-)	Fitting-Plastic Str Blkhd 12Pf	1
▽	3	24358	(000000-)	Cap Tank	1
▲	4	1031699	(000000-)	Gasket, 4.05id 5.29od .19 [Buna]	1
	5	86636	(000000-)	Cover Lid	1
	6	23089	(000000-)	Tank, De-Mister	1
	7	23088	(000000-)	Cover, Tank, Recovery Es	1
	8	23087	(000000-)	Cover, Tank, Recovery W/Label	1
▽	9	73147	(000000-)	Level Sensing Assy	1
▲	10	73145	(000000-)	Bellows, .75 Id 10.3L	1
▲	11	50238	(000000-)	Float Bottle	1
▲	12	50256	(000000-)	Plug, Float	1
	13	1008142	(000000-)	Switch, Snap Actn, 250vdc 25a Spdt	1
	14	86591	(000000-)	Gasket	1
	15	06933	(000000-)	Scr Pan M5X0.8 16	5
	16	83847	(000000-)	Gasket, De-Mister	1
	17	83724	(000000-)	Plate, Mtg, De-Mister	1
	18	12275	(000000-)	Scr-Hexssm 8X1.25 20 Nylnloc	10
	19	20922	(000000-)	Seal, Tube, Silicone	1
	20	75611	(000000-)	Ftg-Plug Npt 12Pm Rd Hd Plstc.	1
	21	83812	(000000-)	Bar, Rnd Plstc .375D 14.62L	1
	22	83811	(000000-)	Bar, Rnd Plstc .375D 14.62	1
	23	23498	(000000-)	Clamp-Wormdrive, 3.56-4.50D	1
	24	9003054	(000000-)	Hose Kit, Vacuum, Replmt [8410]	1
	25	34312	(000000-)	Clamp-Cable 3.00D 1.00W Stl (Diesel only)	1
	26	1015136	(014000-)	Flap, Protector	1
	27	49266	(014000-)	Tie, Cable, Nyl, 07.3l .19w 1.8 Max D	3
	28	391451	(014215-)	Label, Attention Fast Users 5400s	1

Fig. 97 - Scrub Solution and Recovery Tank Drain Group

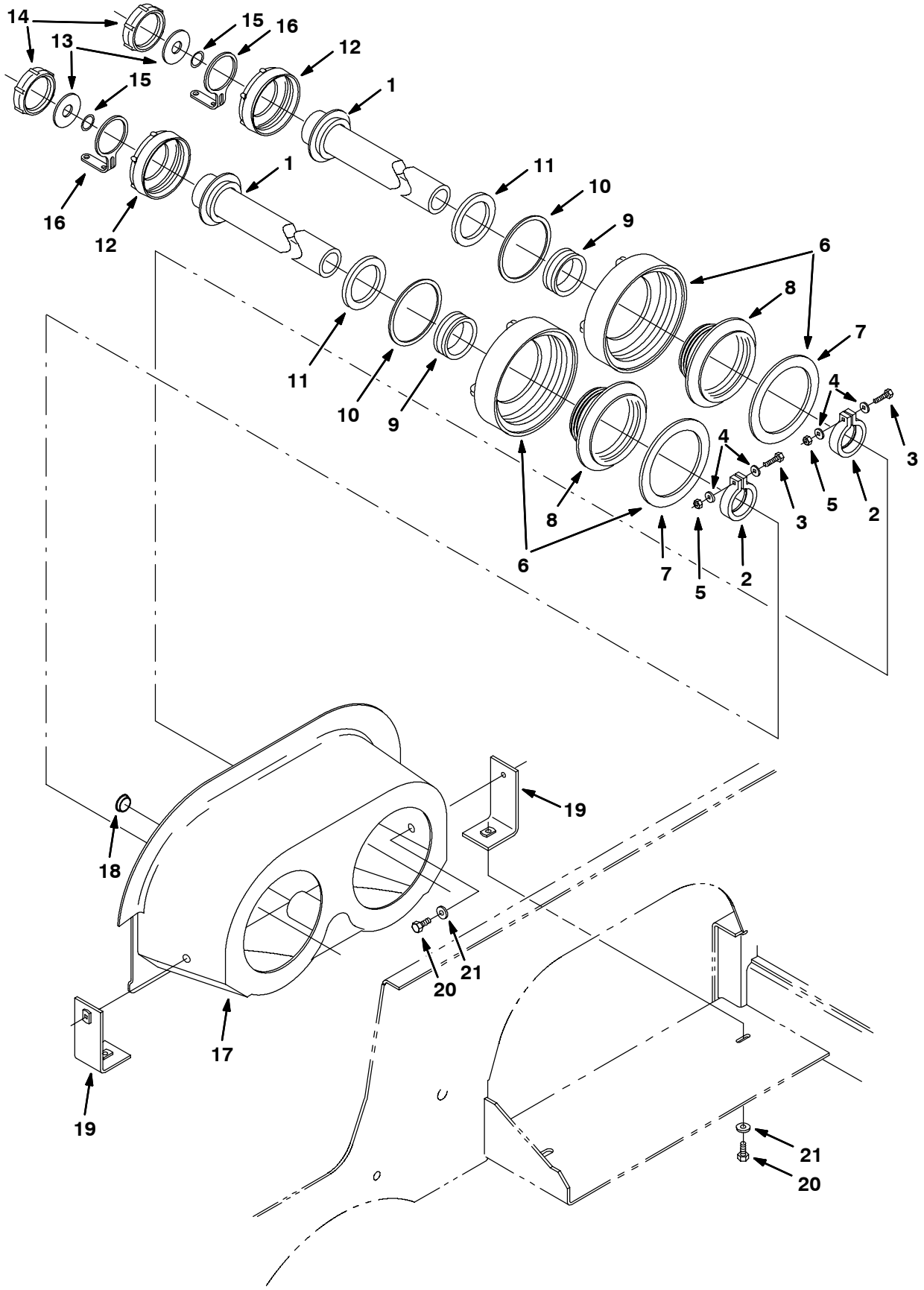

11046 - ALL

Fig. 97 - Scrub Solution and Recovery Tank Drain Group

	Ref.	Part No.	Serial Number	Description	Qty.
	1	73149	(000000-)	Hose Assy, Drain	2
	2	41454	(000000-)	Clamp, Hose	2
	3	12316	(000000-)	Scr Hexssm 5X0.8 25	2
	4	01683	(000000-)	Washer Flt 10 Ss	4
	5	09739	(000000-)	Nut-Hxlocnyln M 5X0.8 Reg 18-8	2
▽	6	24358	(000000-)	Cap Tank	2
▲	7	1031699	(000000-)	Gasket, 4.05id 5.29od .19 [Buna]	2
	8	14864	(000000-)	Cover, Insert	2
	9	41421	(000000-)	Seal, Hose	2
	10	79320	(000000-)	Gasket, Drain Cap	2
	11	41451	(000000-)	Gasket Lid	2
	12	14880	(000000-)	Cap, Drain Hose	2
	13	32614	(000000-)	Gasket Cap	2
	14	32613	(000000-)	Cap Drain	2
	15	32669	(000000-)	Ring Retain Ex, 0.75D	2
	16	32508	(000000-)	Strap Cap Retainer	2
	17	10679	(000000-)	Cover, Cleanout	1
	18	55035	(000000-)	Plug, Hole, Rnd, 1.00h .00-.17, Blk Nyl	1
	19	77234	(000000-)	Bracket	2
	20	15678	(000000-)	Screw Hexssm 6X1.0	4
	21	01684	(000000-)	Washer Flt .25 Ss	4

Fig. 98 - FaST Solution Pump Group (014215-)

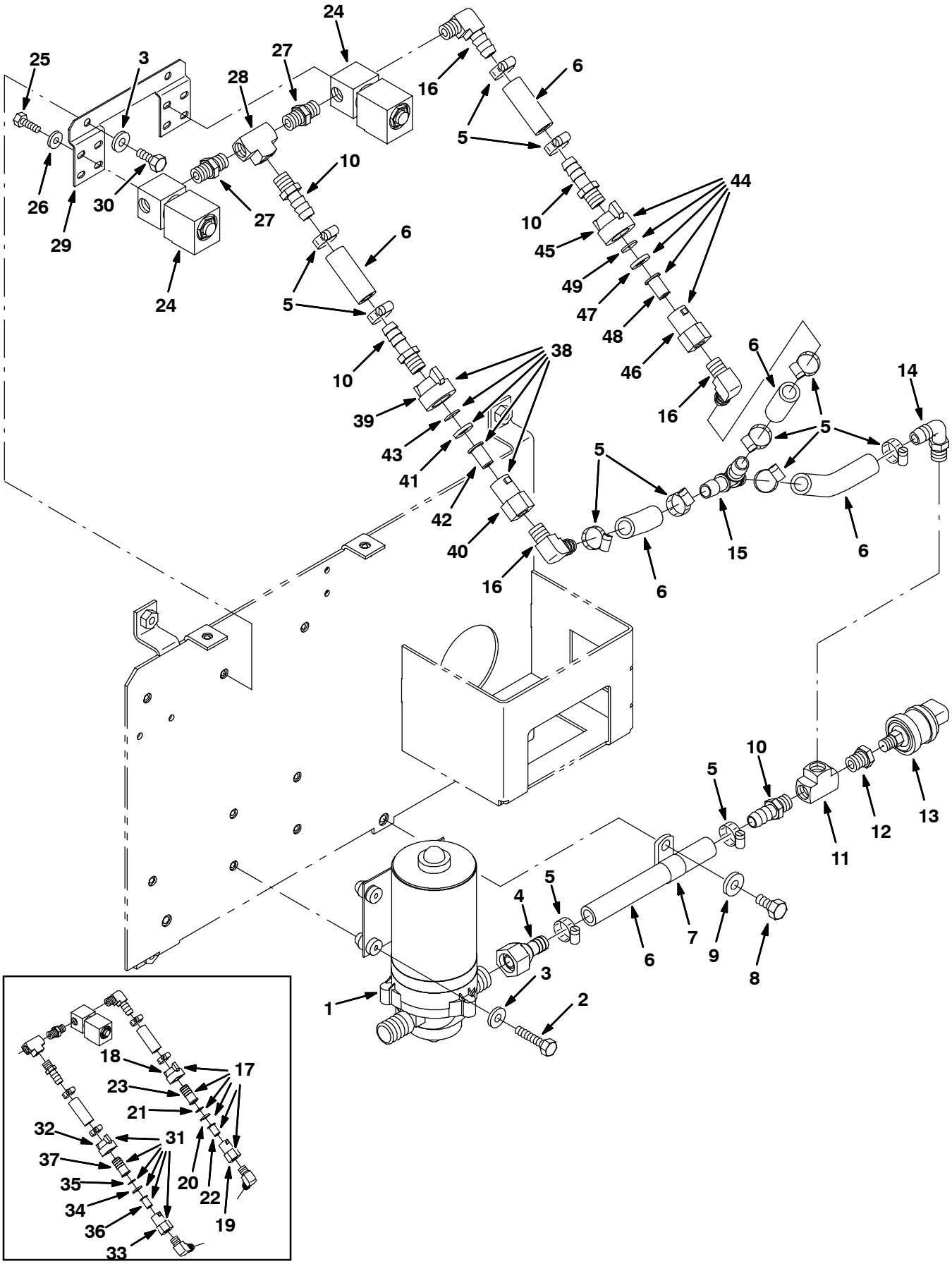

354345 - NA, CE

Fig. 98 - FaST Solution Pump Group (014215-)

	Ref.	Part No.	Serial Number	Description	Qty.
	1	1030878	(014215-)	Pump, Soltn, Ele, 12vdc [W/O Chk Valve]	1
	2	07805	(014215-)	Screw, Hex, M6 X 1.0 X 35, Ss	4
	3	01684	(014215-)	Washer, Flat, 0.25 Ss	6
	4	1018495	(014215-)	Fitting, Plstc, Str, Swivel, Pf08s/Bm08	1
	5	54333	(014215-)	Clamp, Hose, Wormdrive, 0.31-0.88d, .31w	12
	6	1024020	(014215-)	Hose, Afmkt, Pvc, Wir, 0.50 Id 1ft	6
	7	07471	(014215-)	Clamp, Cable, Stl, 0.75d X 0.75w, 1h	1
	8	15675	(014215-)	Screw, Hex, M8 X 1.25 X 16, Ss	1
	9	01685	(014215-)	Washer, Flat, 0.31 Ss	1
	10	1010775	(014215-)	Fitting, Plstc, Str, Bm08/Pm04 Nyl	4
	11	398474	(014215-)	Fitting, Brs, Tee, Pf04/Pf04/Pf04	1
	12	150100	(014215-)	Fitting, Brs, Str, Pf02/Pm04	1
	13	1028582	(014215-)	Switch, Press, 10psi, Spst	1
	14	1010713	(014215-)	Fitting, Plstc, E90, Bm08/Pm04 Nyl	1
	15	1010668	(014215-)	Fitting, Plstc, Y, Bm08/Bm08/Bm08 Nyl	1
	16	1010836	(014215-)	Fitting, Brs, E90, Pm04/Bm08	3
▽	17	1018467	(014215-014329)	Fitting Assy, Cap, 0.093b, Pf04/Bm08 (Repl. by 9002439)	1
▲	18	1014532	(014215-014329)	Fitting, Plstc, Cap, Spray, Pf04	1
▲	19	1005507	(014215-014329)	Fitting, Plstc, Body, Spray, Pf04	1
▲	20	1005508	(014215-014329)	Washer, Flat, 0.34b 0.75d .12, Viton	1
▲	21	1018884	(014215-014329)	Plate, Orifice, 0.093id	1
▲	22	1006447	(014215-014329)	Screen, 50 Mesh, Ss	1
▲	23	1014473	(014215-014329)	Fitting, Brs, Flng, Bm08	1
	24	1018098	(014215-)	Valve, Water, 12vdc, 6.0mm, 04pf	2
	25	09252	(014215-)	Screw, Hex, M5 X 0.8 X 20, 8.8	4
	26	19066	(014215-)	Washer, Flat, #10	4
	27	398468	(014215-)	Fitting, Brs, Str, Pm04/Pm04	2
	28	398474	(014215-)	Fitting, Brs, Tee, Pf04/Pf04/Pf04	1
	29	1021231	(014215-)	Bracket, Mtg, Sol Valve [8400]	1
	30	11329	(014215-)	Screw, Hex, M6 X 1.0 X 16, Ss, Nl	2
▽	31	1018533	(014215-014329)	Fitting Assy, Cap, 0.070b, Pf04/Bm08 (Repl. by 9002438)	1
▲	32	1014532	(014215-014329)	Fitting, Plstc, Cap, Spray, Pf04	1
▲	33	1005507	(014215-014329)	Fitting, Plstc, Body, Spray, Pf04	1
▲	34	1005508	(014215-014329)	Washer, Flat, 0.34b 0.75d .12, Viton	1
▲	35	1018883	(014215-014329)	Plate, Orifice, 0.070id	1
▲	36	1006447	(014215-014329)	Screen, 50 Mesh, Ss	1
▲	37	1014473	(014215-014329)	Fitting, Brs, Flng, Bm08	1
▽	38	1030864	(014330-)	Fitting Assy, Orifice, 0.070b, Pf04/Pf04	1
▲	39	1005506	(014330-)	Fitting, Plstc, Cap, Spray, Pf04	1
▲	40	1005507	(014330-)	Fitting, Plstc, Body, Spray, Pf04	1
▲	41	1005508	(014330-)	Washer, Flat, 0.34b 0.75d .12 [Viton]	1
▲	42	1006447	(014330-)	Vr, Filter, Screen, 50 Mesh .59d .8l Ss	1
▲	43	1018883	(014330-)	Plate, Orifice, 0.070id	1
▽	44	1030863	(014330-)	Fitting Assy, Orifice, 0.093b, Pf04/Pf04	1
▲	45	1005506	(014330-)	Fitting, Plstc, Cap, Spray, Pf04	1
▲	46	1005507	(014330-)	Fitting, Plstc, Body, Spray, Pf04	1
▲	47	1005508	(014330-)	Washer, Flat, 0.34b 0.75d .12 [Viton]	1
▲	48	1006447	(014330-)	Vr, Filter, Screen, 50 Mesh .59d .8l Ss	1
▲	49	1018884	(014330-)	Plate, Orifice, 0.093id	1

Fig. 99 - FaST Air Pump and Detergent Group (014215-)

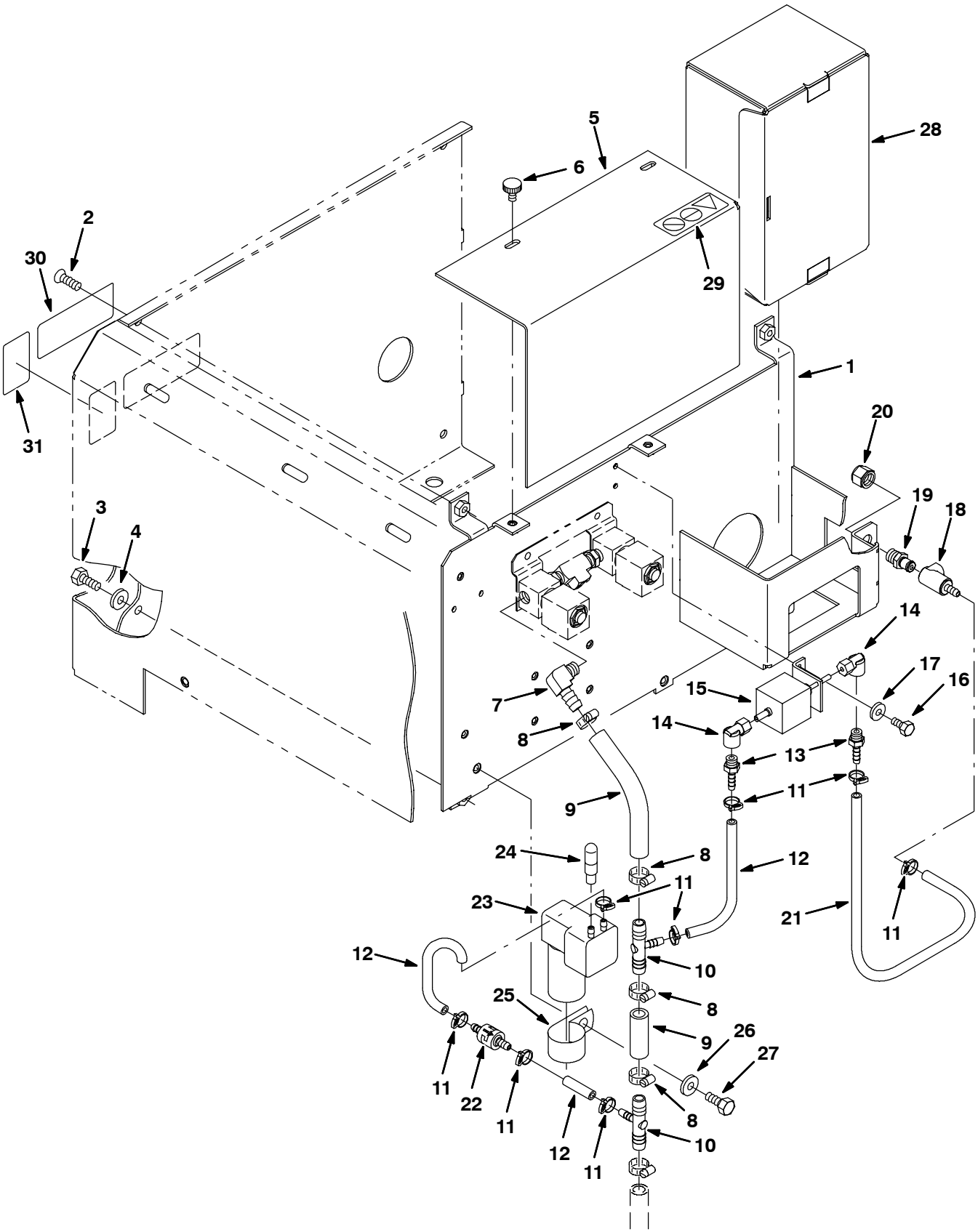

354347 - NA, CE

Fig. 99 - FaST Air Pump and Detergent Group (014215-)

Ref.	Part No.	Serial Number	Description	Qty.
1	1019886	(014215-)	Bracket Wldt, Pump [8400 Fast]	1
2	32129	(014215-)	Screw, Flt, M8 X 1.25 X 20, 10.9	2
3	12273	(014215-)	Screw, Hex, M8 X 1.25 X 20, Ss, Nl	2
4	01685	(014215-)	Washer, Flat, 0.31 Ss	2
5	1020250	(014215-)	Cover, Instr, Panel [8400]	1
6	603012	(014215-)	Knob, Rnd, 19d, Plstic, M6x12 Stud -Zn	2
7	1010836	(014215-)	Fitting, Brs, E90, Pm04/Bm08	1
8	54333	(014215-)	Clamp, Hose, Wormdrive, 0.31-0.88d, .31w	4
9	1024020	(014215-)	Hose, Afmkt, Pvc, Wir, 0.50 Id 1ft	1
10	1010684	(014215-)	Fitting, Plstc, Tee, Bm08/Bm04/Bm08	2
11	1014575	(014215-)	Clamp, Hose, Plstc .351-.394 Id	8
12	1014987	(014215-)	Hose, Afmkt, Pvc, Clr 0.25id 1ft	3
13	150525	(014215-)	Fitting, Brs, Str, Pm02/Bm04	2
14	1014082	(014215-)	Fitting, Brs, E90, Cf03/Pf02	2
15	1018097	(014215-)	Pump, Detgt, 12vdc [560s]	1
16	11635	(014215-)	Screw, Hex, M6 X 1.0 X 12, Ss, Nl	2
17	41579	(014215-)	Washer, Flat, #8, Ss	2
18	1002898	(014215-)	Fitting, Plstc, Str, Bm04, Cplg, Fem	1
19	1002899	(014215-)	Fitting, Plstc, Str, Pm04, Cplg, Mal	1
20	1005435	(014215-)	Fitting, Plstc, Pipe, Cap, Pf04	1
21	1014986	(014215-)	Hose, Afmkt, Pvc, Clr 0.25id 2ft	1
22	1013902	(014215-)	Valve, Check, 2gpm 2psi Bm04/Bm04	1
23	1018780	(014215-)	Pump, Air, Ele, 12vdc	1
24	1005255	(014215-)	Filter Assy, Air, Molded Ure	1
25	53466	(014215-)	Clamp, Cable, Stl, 1.50d X 1.00w, 1h	1
26	32491	(014215-)	Washer, Flat, 0.31 Std	1
27	09010	(014215-)	Screw, Hex, M8 X 1.25 X 25, Ss	1
28	1021878	(014215-)	Detergent Pkg, 4 Liter, Sgl [Tco 665]	1
29	391451	(014215-)	Label, Attention Fast Users 5400s	1
30	1005416	(014215-)	Label [Fast]	1
31	1015012	(014215-)	Label [Nfsi Certification]	1

Fig. 100 - FaST Foam Filter Group (014215-)

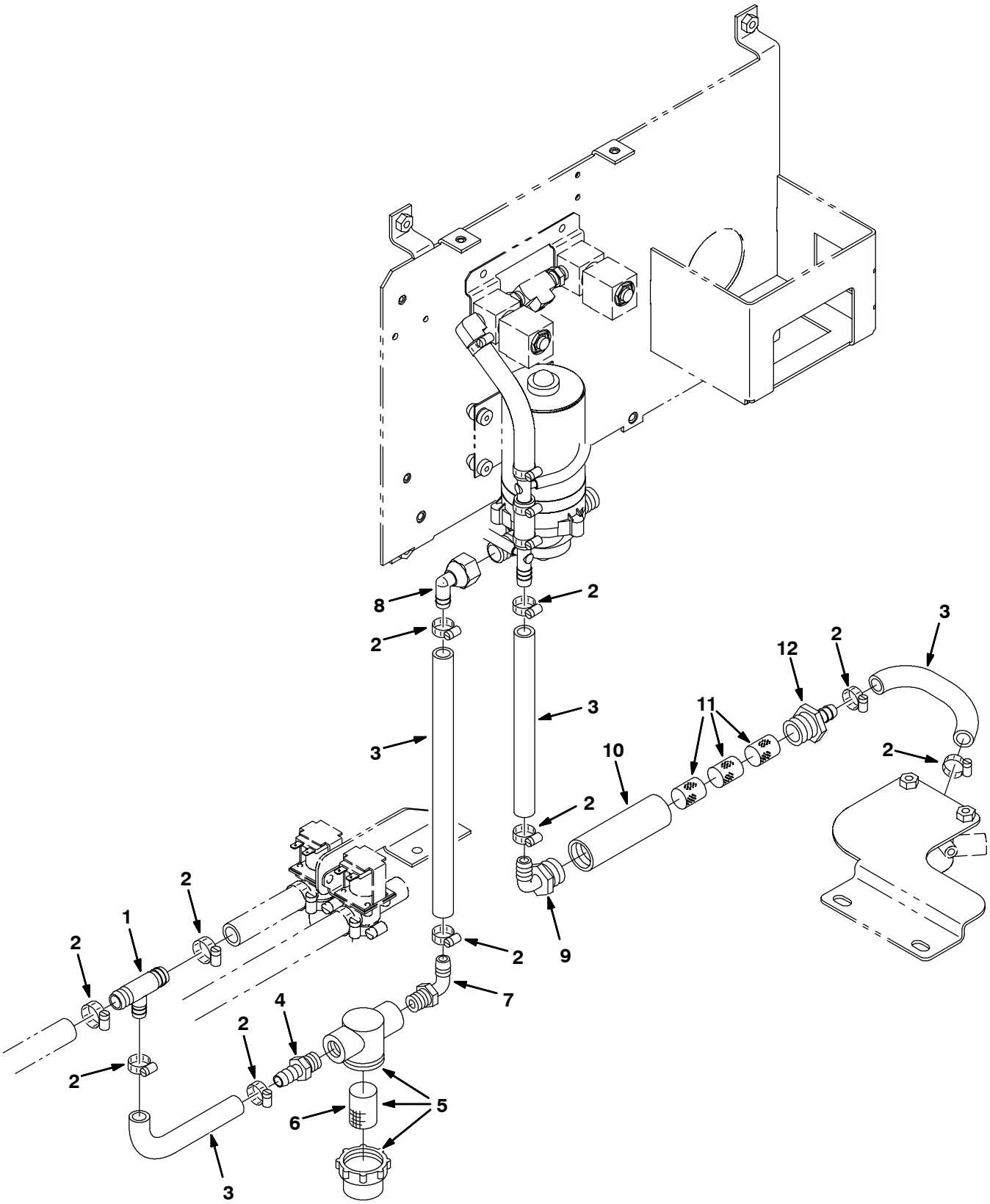

354346 - NA, CE

Fig. 100 - FaST Foam Filter Group (014215-)

	Ref.	Part No.	Serial Number	Description	Qty.
	1	1015486	(014215-)	Fitting, Plstc, Tee, Bm10/Bm08/Bm10	1
	2	54333	(014215-)	Clamp, Hose, Wormdrive, 0.31-0.88d, .31w	10
	3	1024020	(014215-)	Hose, Afmkt, Pvc, Wir, 0.50 Id 1ft	4
	4	64743	(014215-)	Fitting, Plstc, Str, Bm08/Pm06	1
▽	5	1005302	(014215-)	Filter, Inline, Pf06/Pf06, 80 Mesh	1
▲	6	1005304	(014215-)	Screen, Fltr, 80 Mesh	1
	7	64778	(014215-)	Fitting, Plstc, E90, Bm08/Pm06	1
	8	1018499	(014215-)	Fitting, Plstc, E90, Swivel, Bm08/Pf08s	1
	9	1005552	(014215-)	Fitting, Plstc, E90, Bm08/Pm12, Nyl	1
	10	1005086	(014215-)	Tube, Pvc, Shc80, Clr, 4.0l	1
	11	1002789	(014215-)	Filter, Foam	3
	12	79273-1	(014215-)	Fitting, Plstc, Str, Bm08/Pm12	1

Fig. 101 - FaST Electrical Group (014215-)

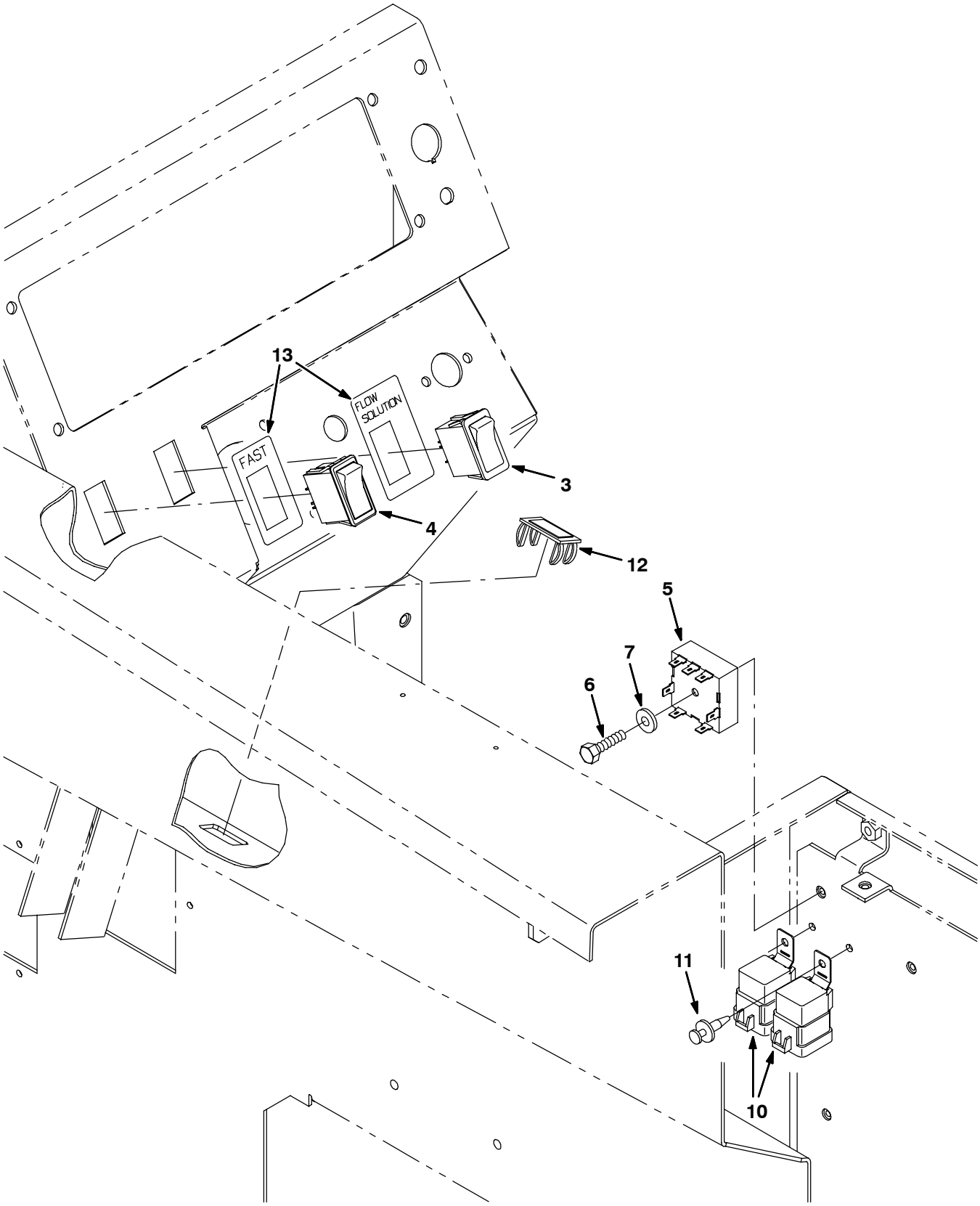

Fig. 101 - FaST Electrical Group (014215-)

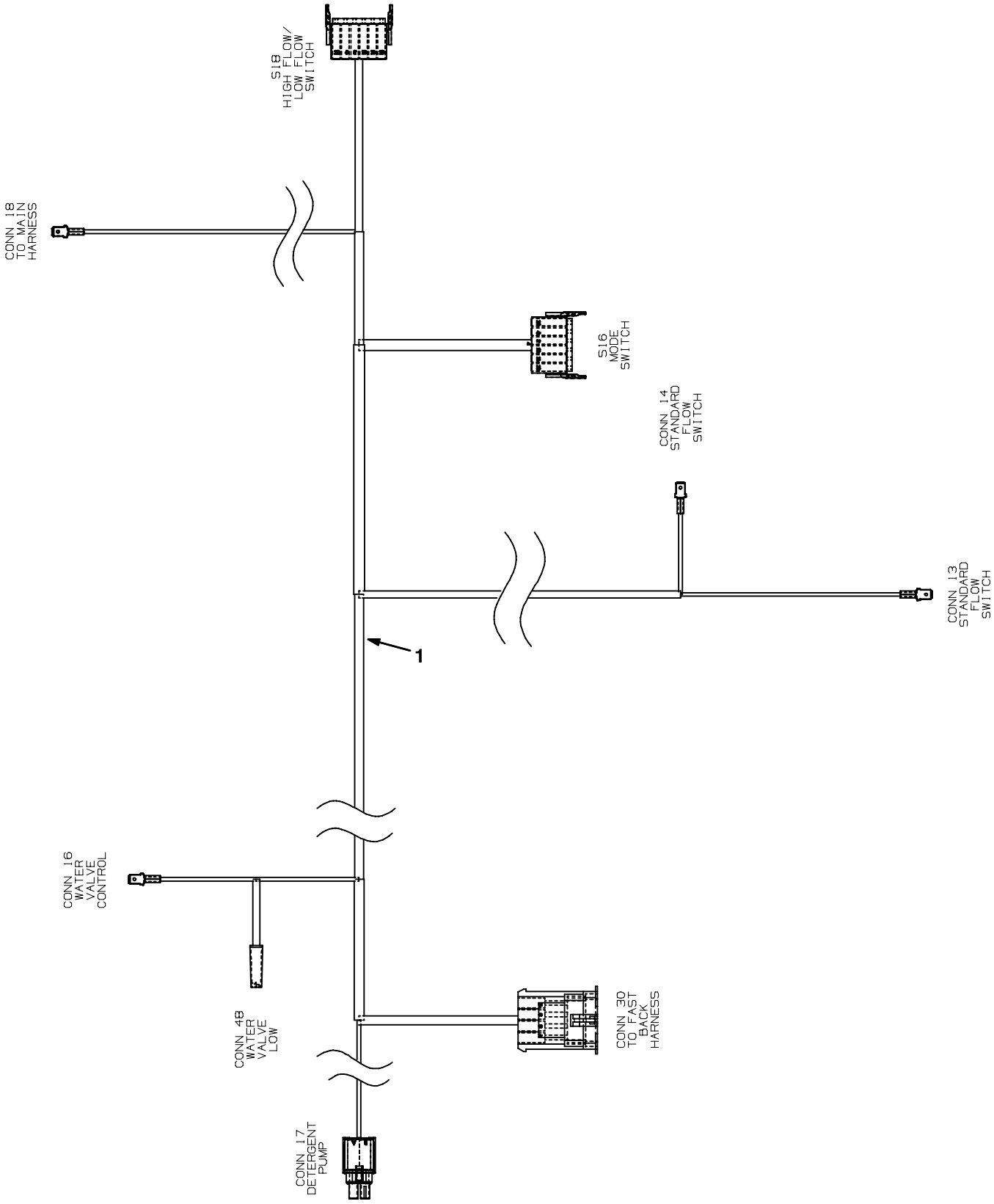

Fig. 101 - FaST Electrical Group (014215-)

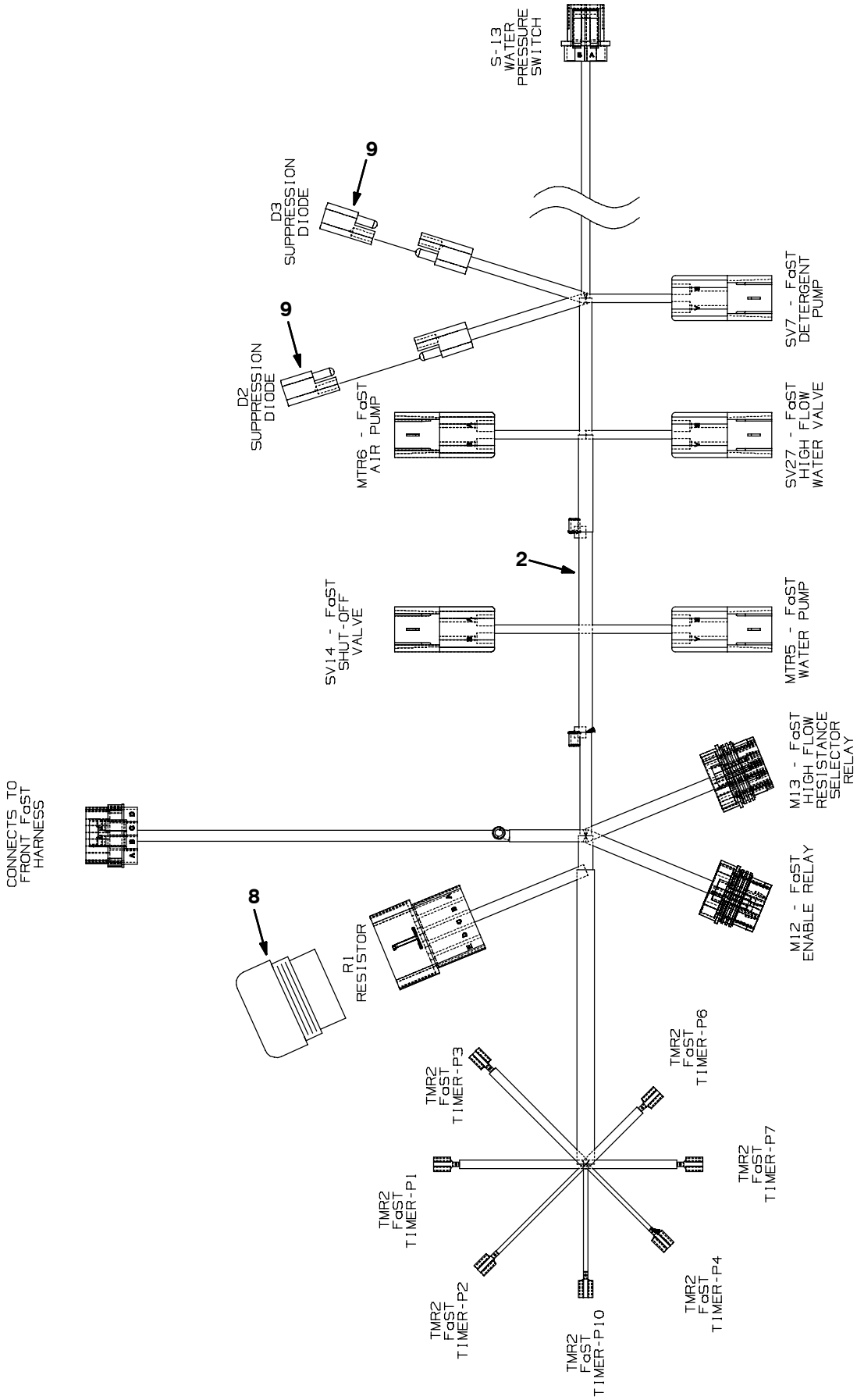

Fig. 101 - FaST Electrical Group (014215-)

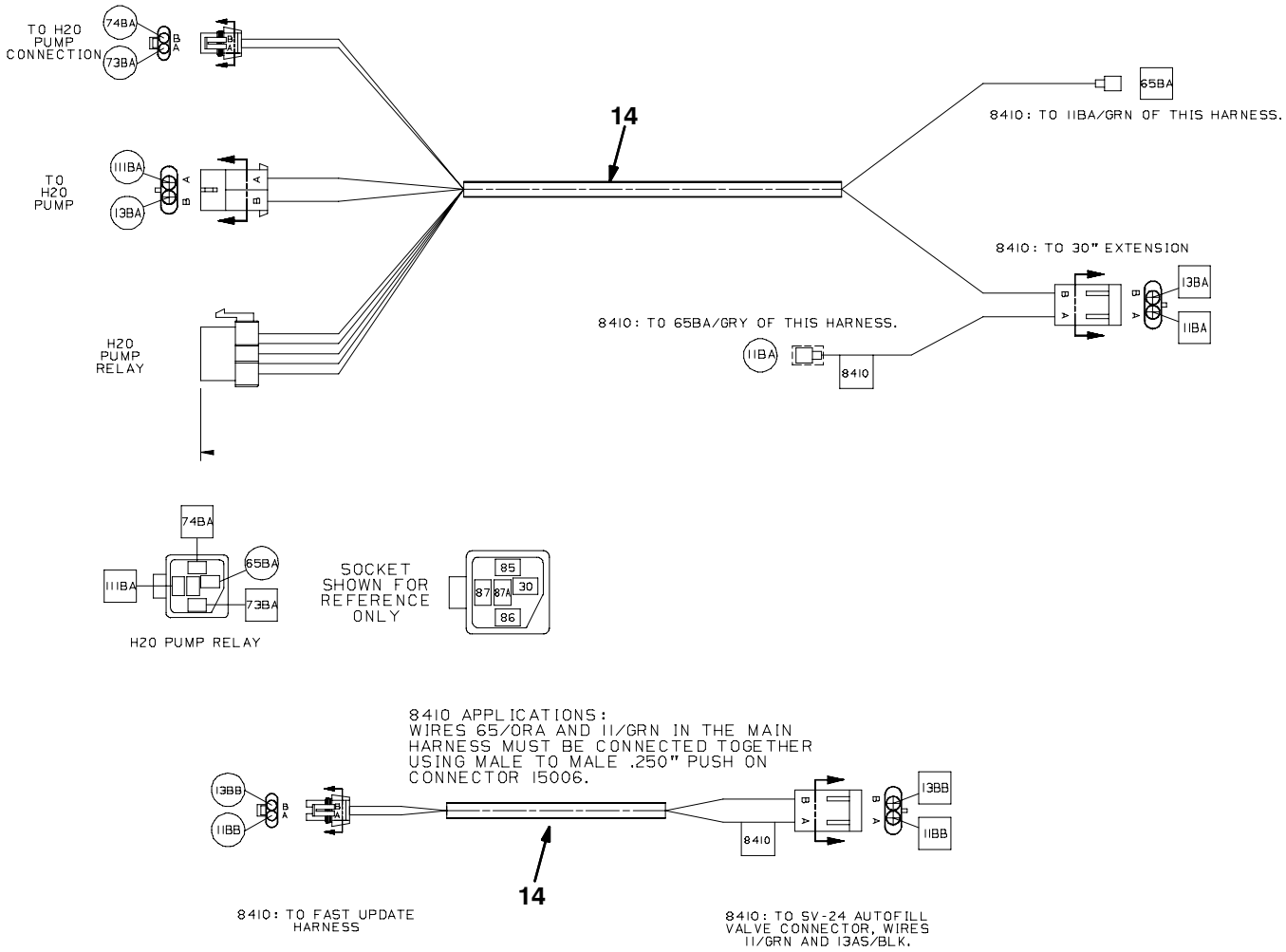

354348 - NA,CE

Ref.	Part No.	Serial Number	Description	Qty.
1	1022662	(014215-)	Harness, Front, Fast, [8410]	1
2	1022636	(014215-)	Harness, Back, Fast, [8410]	1
3	377084	(014215-)	Switch, Rocker, 36vdc 05a Progressive	1
4	397889	(014215-)	Switch, Rocker, 36vdc 05a Dpst On/N/On	1
5	1028580	(014215-)	Timer, 9-41vdc, Recycling	1
6	06945	(014215-)	Screw, Hex, M6 X 1.0 X 30, 8.8	1
7	01684	(014215-)	Washer, Flat, 0.25 Ss	1
8	1015096	(014215-)	Resistor Assy W / 5 Pin Plug	1
9	222290	(014215-)	Diode, Ele, Plug	2
10	56186	(014215-)	Relay, 12vdc, 40a, Spdt N/O [Potter]	2
11	72970	(014215-)	Rivet, Plstc, .250d X 0.898	2
12	57772	(014215-)	Button, Plug, Switch, 1.45 X 0.83 Hole	1
13	1020195	(014215-)	Label Set, Opertnl	1
14	1031405	(014215-)	Harness [7400/8410 Fast Update]	1

Fig. 102 - Vacuum Fan Group, Scrubber (000000-013227)

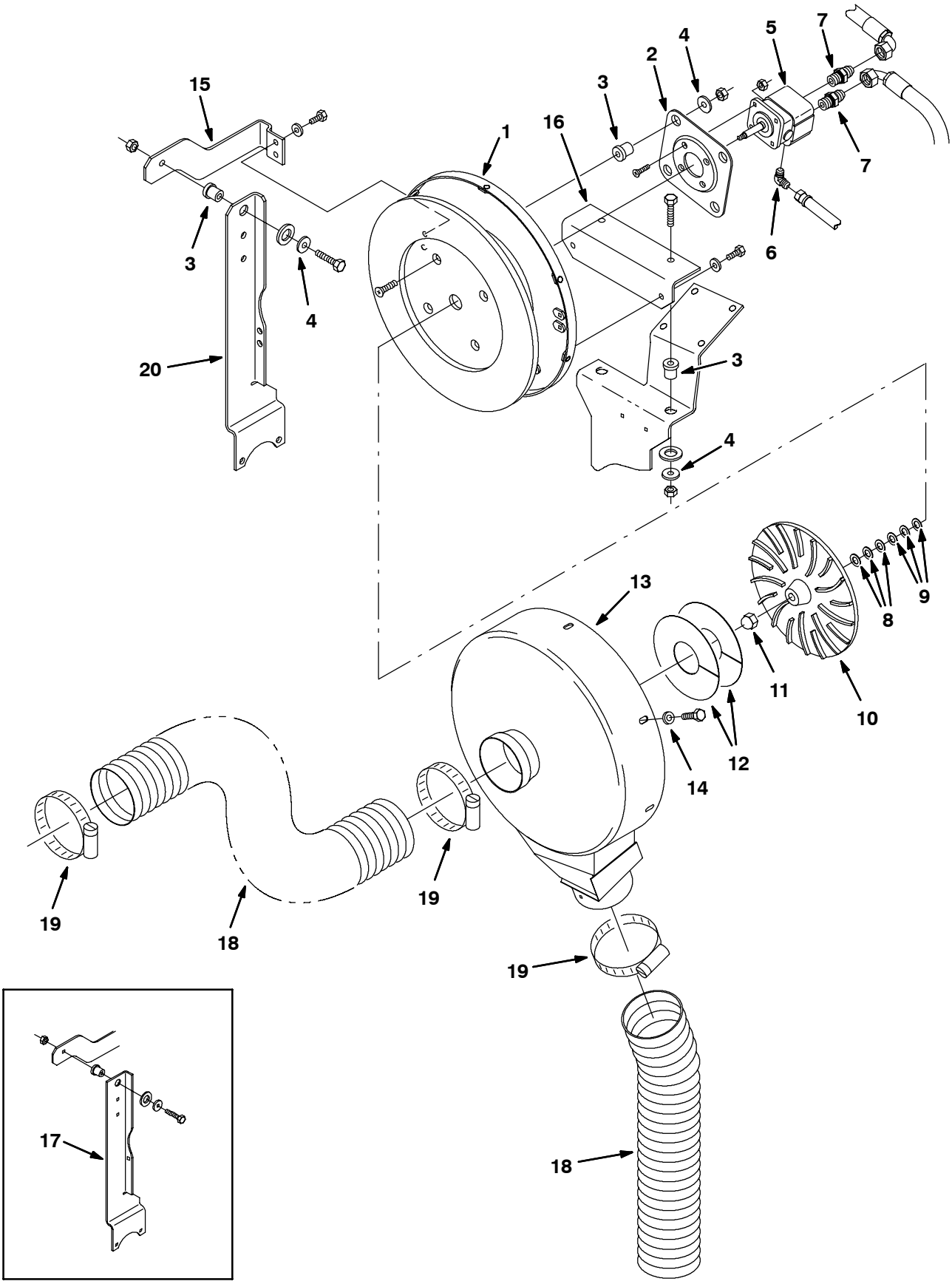

11020 - 8410, G, LP, NA

Fig. 102 - Vacuum Fan Group, Scrubber (000000-013227)

Ref.	Part No.	Serial Number	Description	Qty.
1	73270	(000000-013227)	Housing Wldt, Rear	1
2	54275A	(000000-013227)	Bracket, Mounting Motor	1
3	54274	(000000-013227)	Isolator-Vibration,125Lb.Ratng	7
4	13248	(000000-013227)	Washer .400B 1.12D .12Cr Znc	7
5	73112	(000000-013227)	Motor, Hyd Gear Ex 0.13L 3000 (See Breakdown)	1
6	77097	(000000-013227)	Ftg-Hyd, E90	1
7	56692	(000000-013227)	Ftg-Hyd Str Jm08/Om10	2
8	75456-3	(000000-013227)	Shim .020Th 0.88Odx0.506Id	3
9	75456-4	(000000-013227)	Shim .060Th 0.880Dxo.506Id	3
10	03922	(000000-013227)	Impeller 9.5 Dia. 18 Blade Mac	1
11	41130	(000000-013227)	Nut-Low Crown .50-20 Pltd	1
12	58114	(000000-013227)	Fan, Repair Kit, Reassembly	1
13	77222	(000000-013227)	Housing, Vac Fan W/Label	1
14	41186	(000000-013227)	Washer-Belleville .31 Pltd	6
15	83987	(000000-013227)	Bracket, Fan	1
16	72635	(000000-013227)	Bracket, Fan	1
17	385434	(000000-012503)	Kit, Replm, Brackets F/83986/78733	1
18	77320	(000000-013227)	Hose, Vacuum	1
19	79380	(000000-013227)	Clamp Wormdrive, 3.75-4.62	3
20	385428	(012504-013227)	Bracket, Mtg, Vac Fan 2.5 Ford	1

Fig. 103 - Vacuum Fan Group, Scrubber (013228-013999)

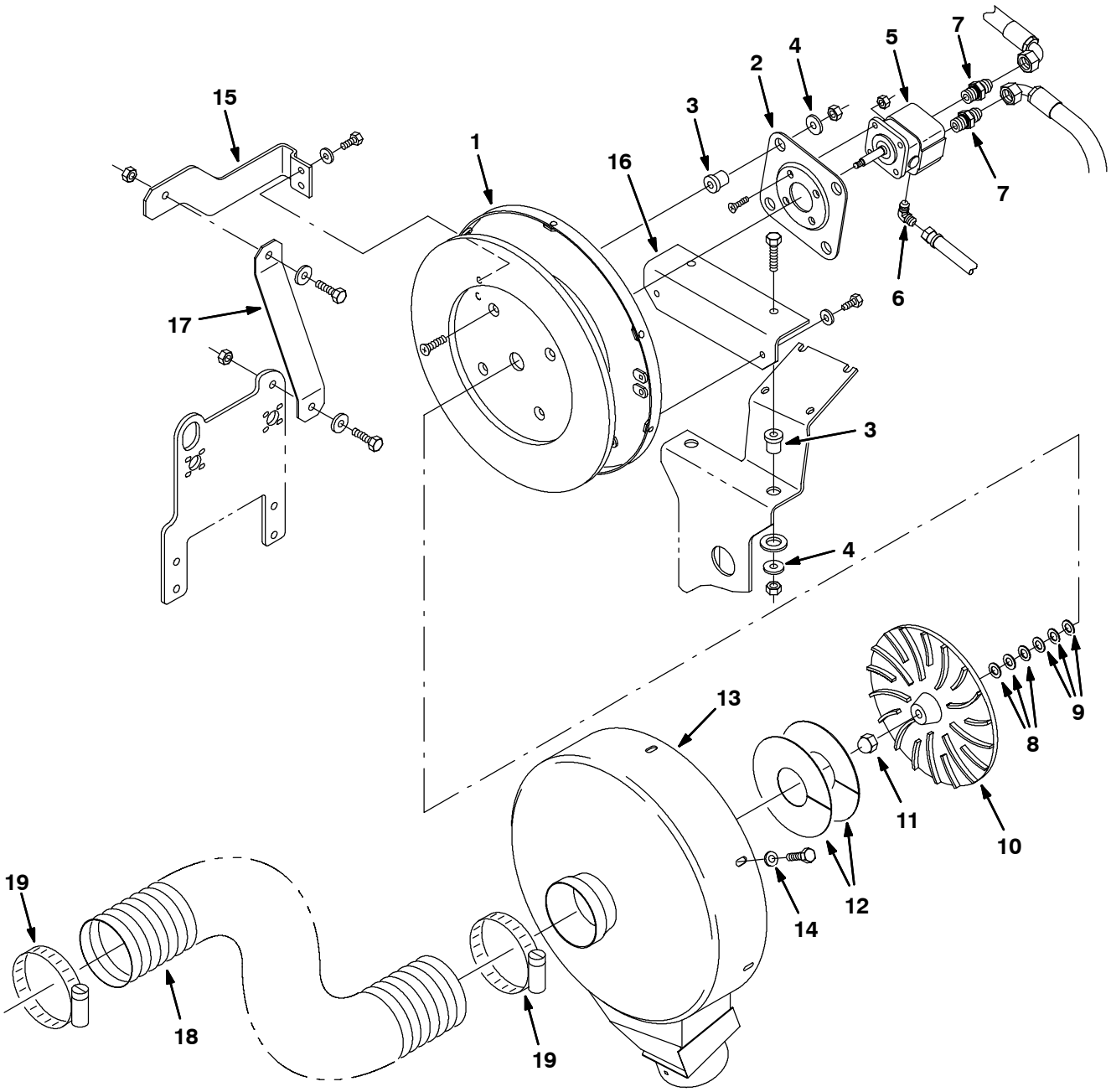

353854 - 8410, G, LP, NA

Fig. 103 - Vacuum Fan Group, Scrubber (013228-013999)

Ref.	Part No.	Serial Number	Description	Qty.
1	73270	(013228-013999)	Housing Wldt, Rear	1
2	54275A	(013228-013999)	Bracket, Mounting Motor	1
3	54274	(013228-013999)	Isolator-Vibration,125Lb.Ratng	6
4	13248	(013228-013999)	Washer .400B 1.12D .12Cr Znc	6
5	73112	(013228-013999)	Motor, Hyd Gear Ex 0.13L 3000	1
6	77097	(013228-013999)	Ftg-Hyd, E90	1
7	56692	(013228-013999)	Ftg-Hyd Str Jm08/Om10	2
8	75456-3	(013228-013999)	Shim .020Th 0.88Odx0.506Id	3
9	75456-4	(013228-013999)	Shim .060Th 0.880Dxo.506Id	3
10	03922	(013228-013999)	Impeller 9.5 Dia. 18 Blade Mac	1
11	41130	(013228-013999)	Nut-Low Crown .50-20 Pltd	1
12	58114	(013228-013999)	Fan, Repair Kit, Reassembly	1
13	77222	(013228-013999)	Housing, Vac Fan W/Label	1
14	41186	(013228-013999)	Washer-Belleville .31 Pltd	6
15	83987	(013228-013999)	Bracket, Fan	1
16	72635	(013228-013999)	Bracket, Fan	1
17	1008377	(013228-013999)	Bracket, Mtg, Vacfan	1
18	77320	(013228-013999)	Hose, Vacuum	1
19	79380	(013228-013999)	Clamp Wormdrive, 3.75-4.62	2

Fig. 104 - Vacuum Fan Group, Scrubber (014000-)

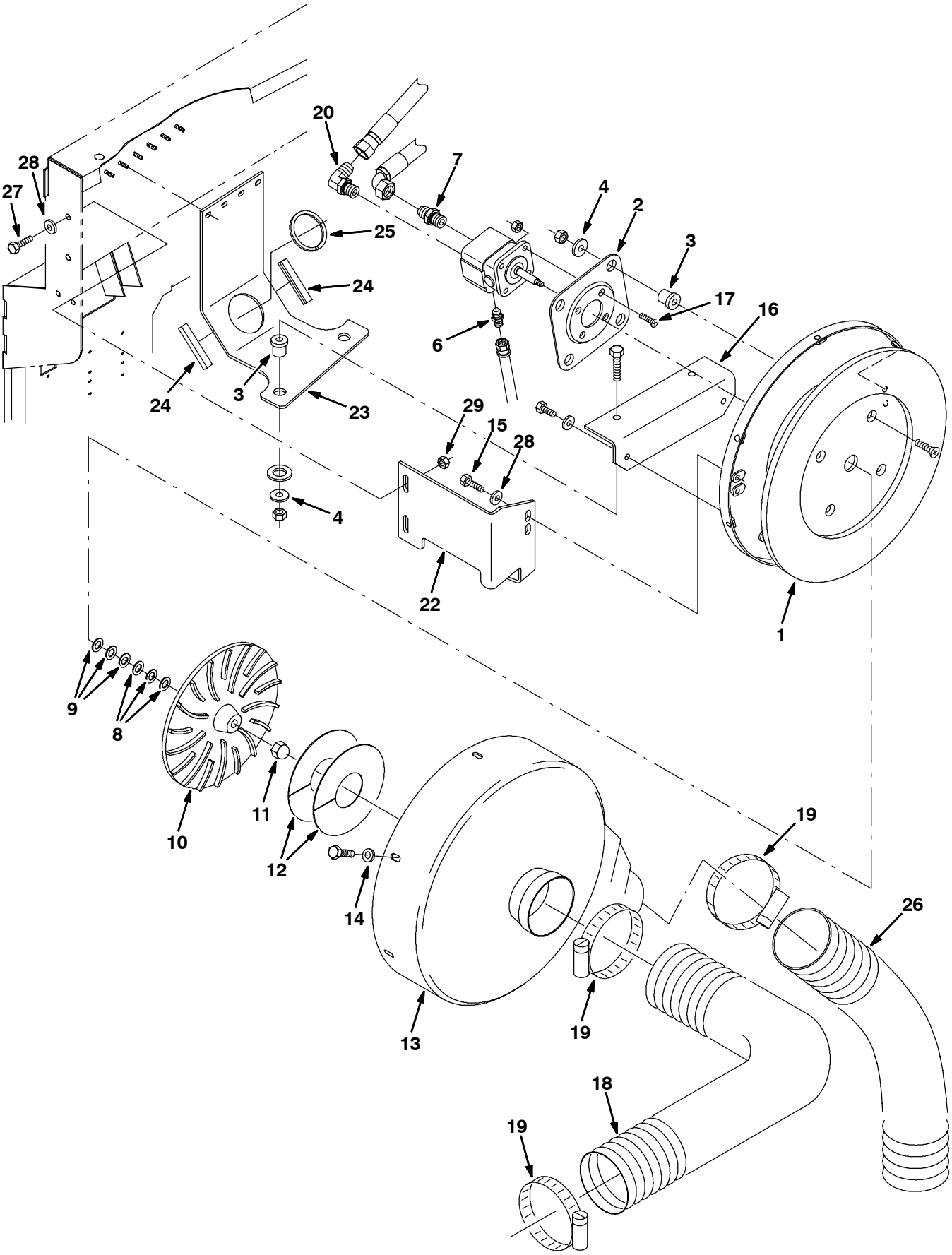

353854 - 8410, G, LP, NA

Fig. 104 - Vacuum Fan Group, Scrubber (014000-)

Ref.	Part No.	Serial Number	Description	Qty.
1	73270	(014000-)	Housing Wldt, Rear	1
2	54275A	(014000-)	Bracket, Mounting Motor	1
3	54274	(014000-)	Isolator-Vibration,125Lb.Ratng	6
4	13248	(014000-)	Washer .400B 1.12D .12Cr Znc	6
5	73112	(014000-)	Motor, Hyd Gear Ex 0.13L 3000	1
6	55586	(014000-)	Fitting, Hyd, Str, Jm04/Om04	1
7	56692	(014000-)	Ftg-Hyd Str Jm08/Om10	1
8	75456-3	(014000-)	Shim .020Th 0.88Odx0.506Id	3
9	75456-4	(014000-)	Shim .060Th 0.880Dxo.506Id	3
10	03922	(014000-)	Impeller 9.5 Dia. 18 Blade Mac	1
11	41130	(014000-)	Nut-Low Crown .50-20 Pltd	1
12	58114	(014000-)	Fan, Repair Kit, Reassembly	1
13	77222	(014000-)	Housing, Vac Fan W/Label	1
14	41186	(014000-)	Washer-Belleville .31 Pltd	6
15	16931	(014000-)	Screw, Hex, M8 X 1.25 X 20, 8.8	2
16	72635	(014000-)	Bracket, Fan	1
17	39534	(014000-)	Screw, Flt, .25-20 X 1.00, Al	4
18	77320	(014000-)	Hose, Vacuum	1
19	79380	(014000-)	Clamp Wormdrive, 3.75-4.62	2
20	56821	(014000-)	Fitting, Hyd, E90, Jm08/Om10	1
21	32981	(014000-)	Nut, Hex, Lock, .25-20, Nl	4
22	1013846	(014000-)	Bracket, Mtg, Fan	1
23	1013851	(014000-)	Bracket, Mtg, Fan	1
24	74068	(014000-)	Molding, Trim, Pvc,.18-.31 02.8l	2
25	365080	(014000-)	Molding, Trim, Pvc,.18-.31 09.5l	1
26	20971	(014000-)	Hose, Flex, Vacuum, 4.0d 30.0l	1
27	39277	(014000-)	Screw, Hex, M8 X 1.25 X 25, 8.8	2
28	32491	(014000-)	Washer, Flat, 0.31 Std	4
29	07791	(014000-)	Nut, Hex, Flng, M8 X 1.25	2

Fig. 105 - Steering Group

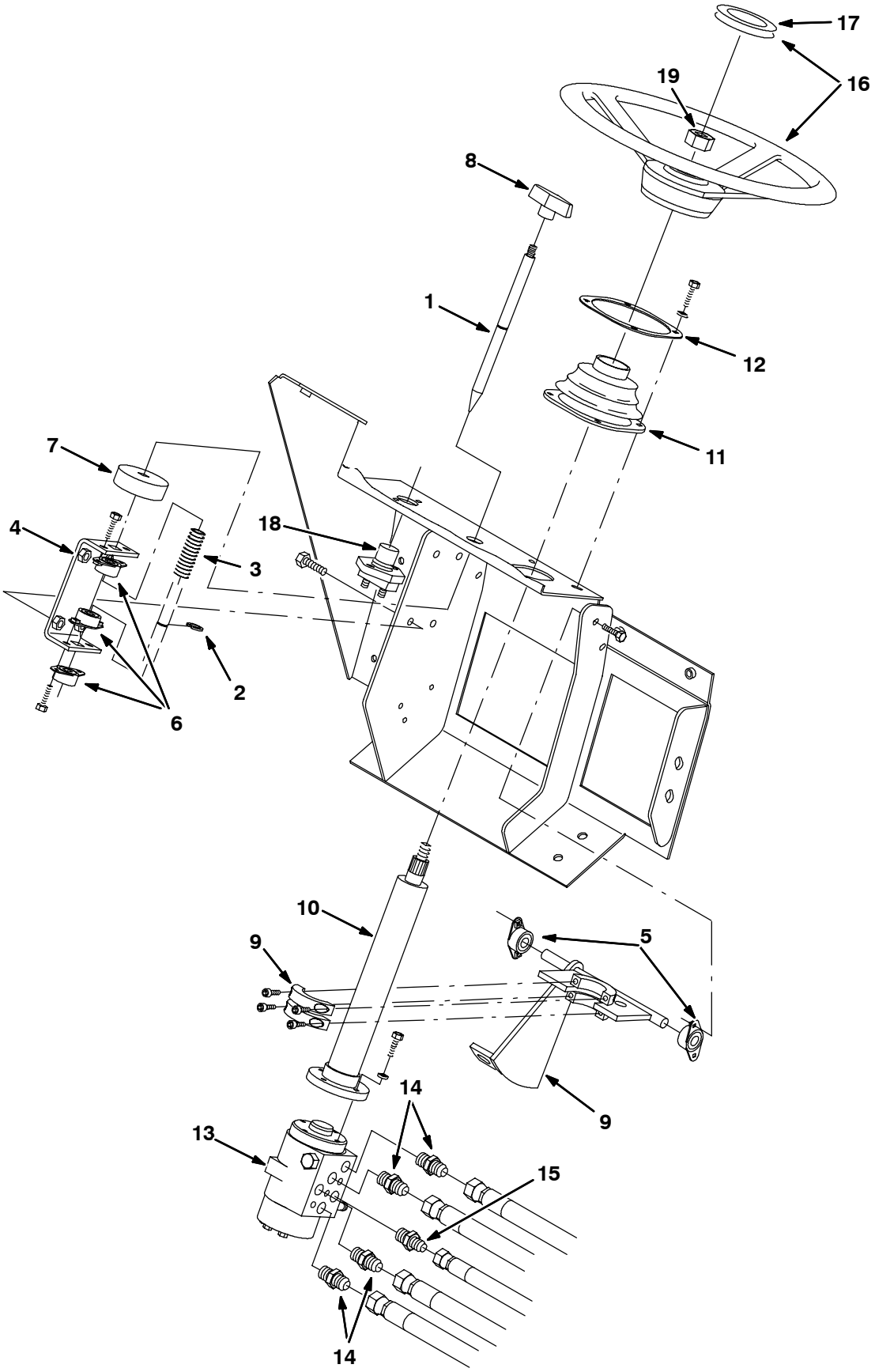

08988 - ALL

Fig. 105 - Steering Group

	Ref.	Part No.	Serial Number	Description	Qty.
	1	64651	(000000-)	Rod, Latch, Steering, Tilt	1
	2	70717	(000000-)	Ring, Retain, Ex0.50Od,Heavydt	1
	3	22290	(000000-)	Sprng,Comp,0.62Idx.06Wire 2.3L	1
	4	64655	(000000-)	Channel, Mounting, Steering La	1
	5	70709	(000000-)	Bearing, Flange .500B	2
	6	47585	(000000-)	Bearing-Flange,2 Hole 0.50Bore	3
	7	75968	(000000-)	Seal, Bearing	1
	8	04706	(000000-)	Handle Lift Brush	1
	9	73027	(000000-)	Bracket Wldt, Steering, Tilt	1
	10	73061	(000000-)	Column, Steering #2 10Lg Wire	1
	11	70622	(000000-)	Seal, Boot, Steering Column	1
	12	70623	(000000-)	Plate, Mtg, Steering Boot	1
	13	73093	(000000-)	Steer Control, Hyd#2 06.1 1000 (See Breakdowns)	1
	14	56690	(000000-)	Ftg-Hyd Str Jm06/Om06	4
	15	55685	(000000-)	Ftg-Hyd Str Jm04/Om06	1
▽	16	1036255	(000000-)	Wheel, Steering, 14.0d, Taper Bore	1
▲	17	1038966	(000000-)	Cap, Wheel, Steering	1
▲		70219	(000000-)	Steering Wheel Insert	1
	18	44078	(000000-)	Switch, Pushmom, Spst100A 12V	1
	19	56185	(000000-)	Nut	1

Fig. 106 - Electrical Instrument Panel Assembly Main Group

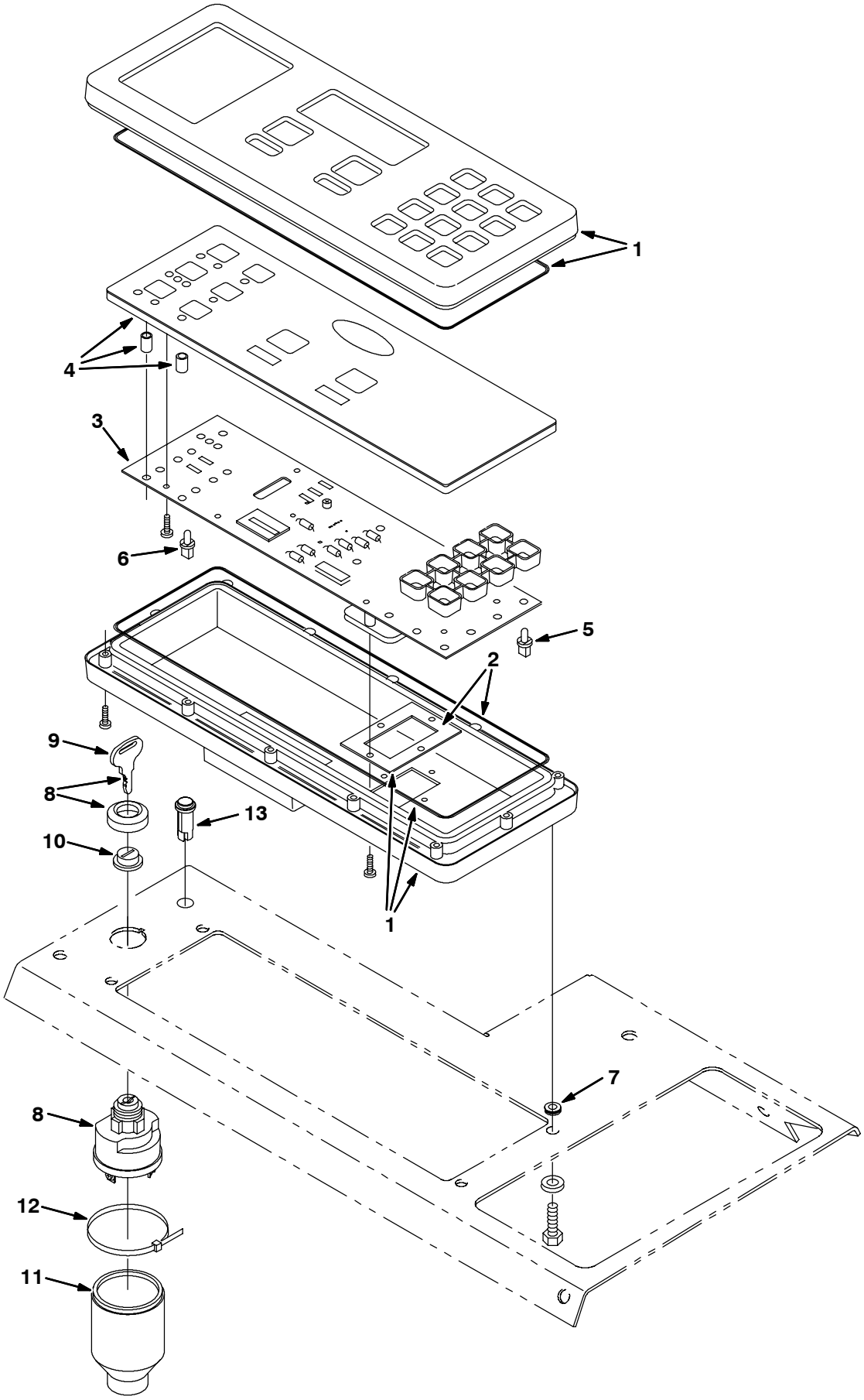

11095 – 8410, G, LP

Fig. 106 - Electrical Instrument Panel Assembly Main Group

	Ref.	Part No.	Serial Number	Description	Qty.
▽		84052	(000000–)	Replm Kit, Instr Panel F/83719	1
▲	1	59976	(000000–)	Case, Replmt Kit	1
▲	2	59977	(000000–)	Seal, Replmt Kit	1
▲	3	84061	(000000–)	Circuit Board Rpmt Kit F/83709	1
▲	4	84141	(000000–)	Touch Panel Replmt Kit F/84069	1
▲	5	59971	(000000–)	Lamp, Replmt Kit (8) F/59972	2
▲	6	56346	(000000–)	Lamp, Replmt Kit (8) F/56330	2
	7	10632–5	(000000–)	Grommet Rbr 0.25Id For .09Matl	4
▽	8	87536AM	(000000–)	Switch Ignition	1
▲	9	87866	(000000–)	Key Set,Switch	1
	10	382516	(000000–)	Boot, Switch	1
	11	383165	(000000–)	Boot, Switch, Ignition	1
	12	49263	(000000–)	Tie, Cable, Nyl, 11.4l .19w 3.0 Max D	1
	13	1012185	(014000–)	Light, Check Eng, Amb, 14vdc	1

Fig. 107 - Electrical Instrument Panel Auxilary Group

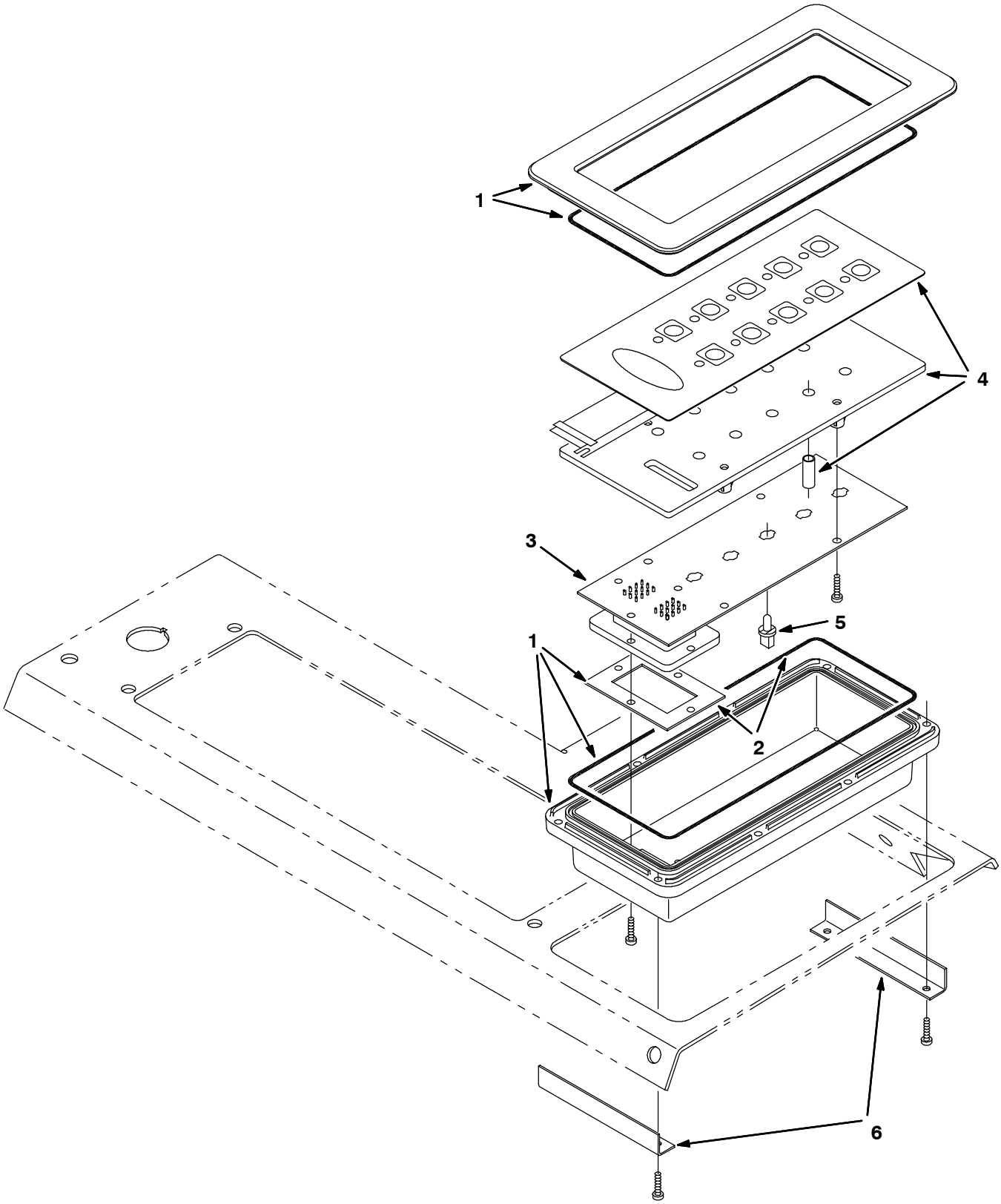

11169 - ALL

Fig. 107 - Electrical Instrument Panel Auxilary Group

	Ref.	Part No.	Serial Number	Description	Qty.
▽		84053	(000000-)	Replm Kit, Instr Panel F/83720	1
▲	1	73235	(000000-)	Panel, Instrument,Replmt Kit	1
▲	2	73234	(000000-)	Seal Replmt Kit	1
▲	3	84062	(000000-)	Circuit Board Rplt Kit F/83716	1
▲	4	73230	(000000-)	Panel, Touch,Replmt Kitf/73214	1
▲	5	73205	(000000-)	Lamp Replmt Kit (5) F/59972	2
	6	73239	(000000-)	Bracket, L	2

Fig. 108 - Electrical Circuit Breaker and Relay Group

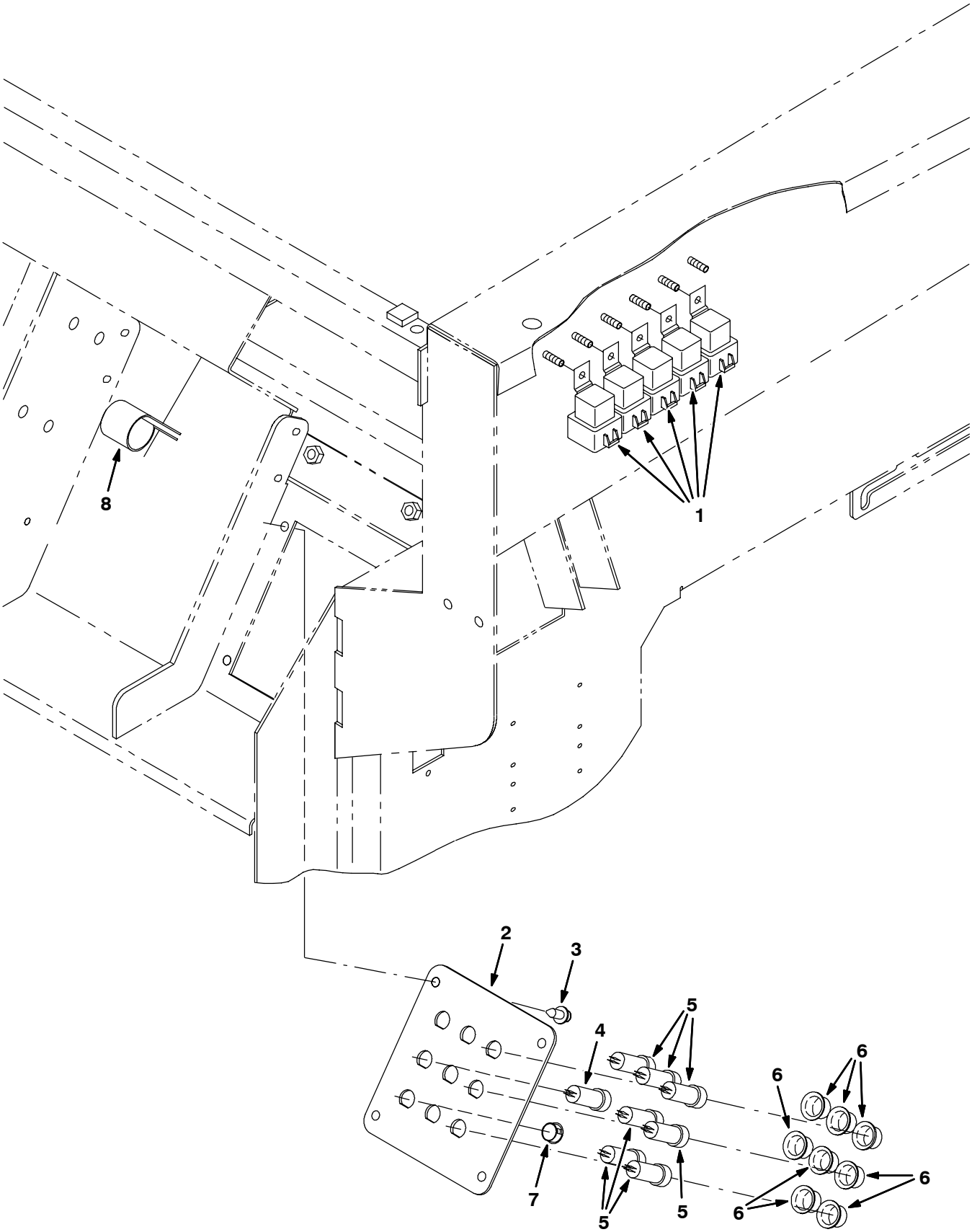

11052 - 8410, G, LP

Fig. 108 - Electrical Circuit Breaker and Relay Group

Ref.	Part No.	Serial Number	Description	Qty.
1	56186	(000000-)	Relay, Shrouded, 12 Vdc	5
2	10612	(000000-)	Plate, Circuit Breaker	1
3	72970	(000000-)	Rivet, Plastic .250Dx.898	4
4	57164	(000000-)	Breaker-Circuit 10 Resetable	1
5	57803	(000000-)	Breaker-Circuit, 15A Resetable	7
6	57751	(000000-)	Boot,Circuit Breaker	8
7	57167	(000000-)	Plugbtn .62H .03-.12 Blacknyl	1
8	58366	(000000-)	Clamp,Cable 1.25Dia 1.00W Neo	1

Fig. 109 - Electrical Schematic (000000-013227)

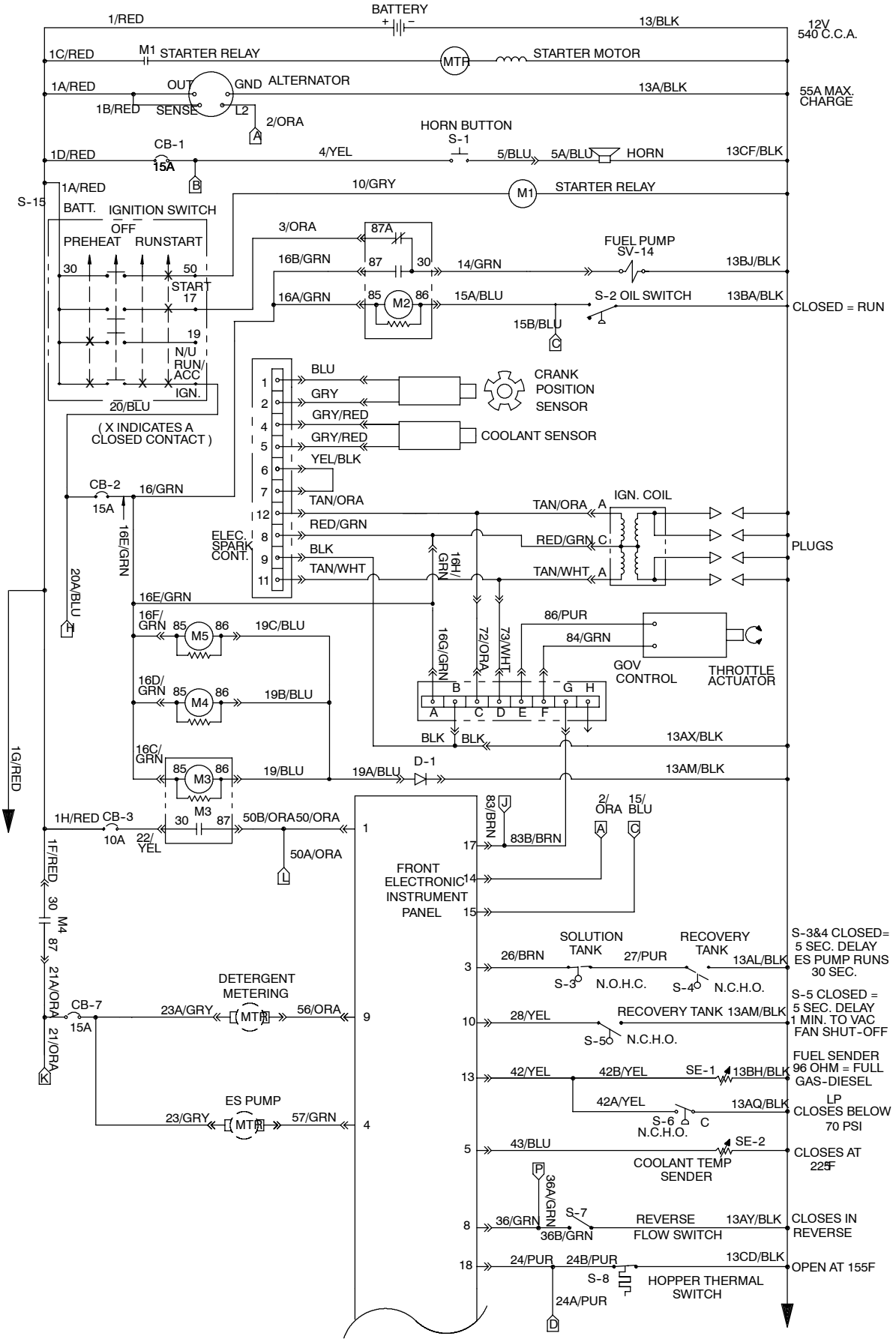

Fig. 109 - Electrical Schematic (000000-013227)

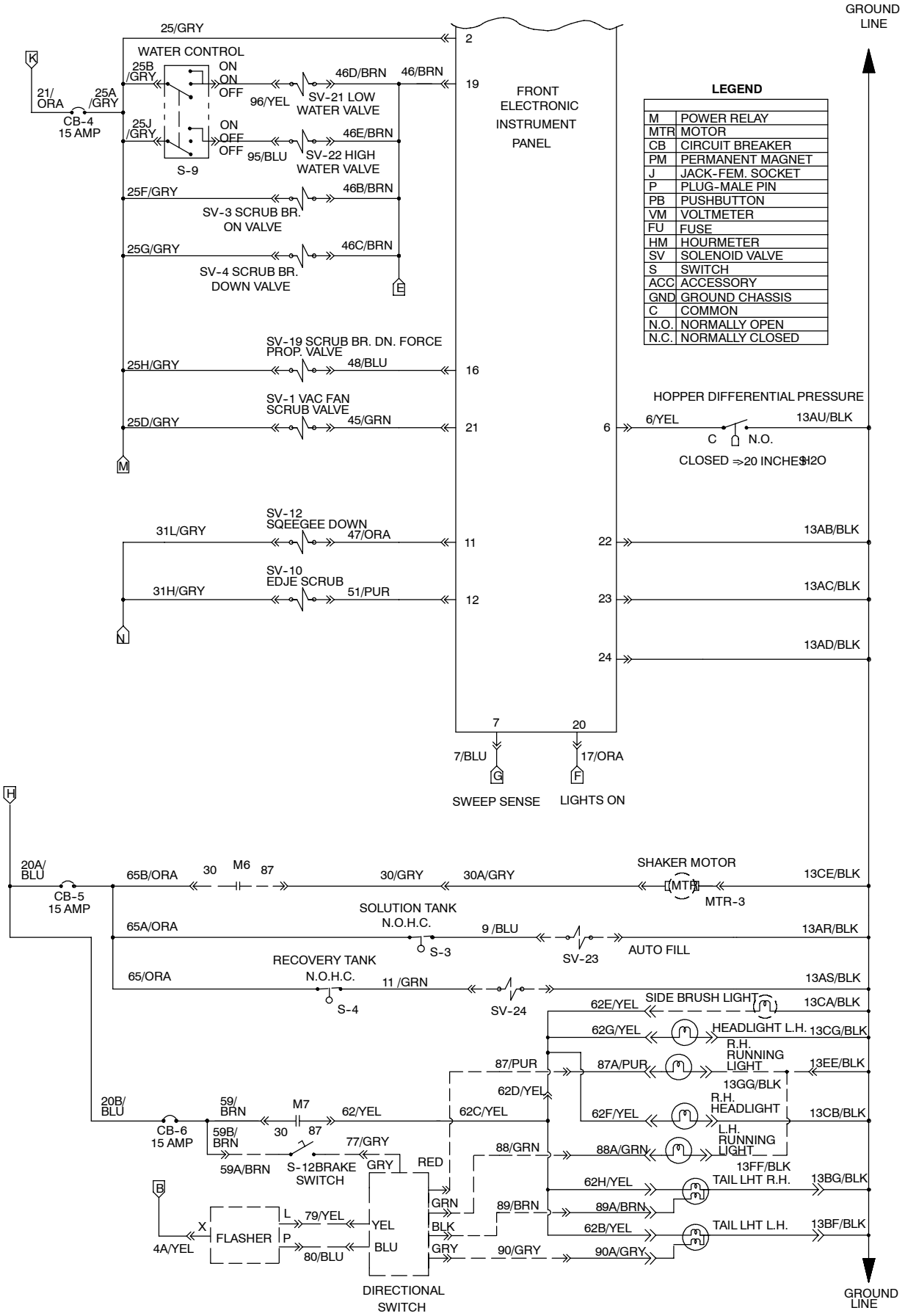

Fig. 109 - Electrical Schematic (000000-013227)

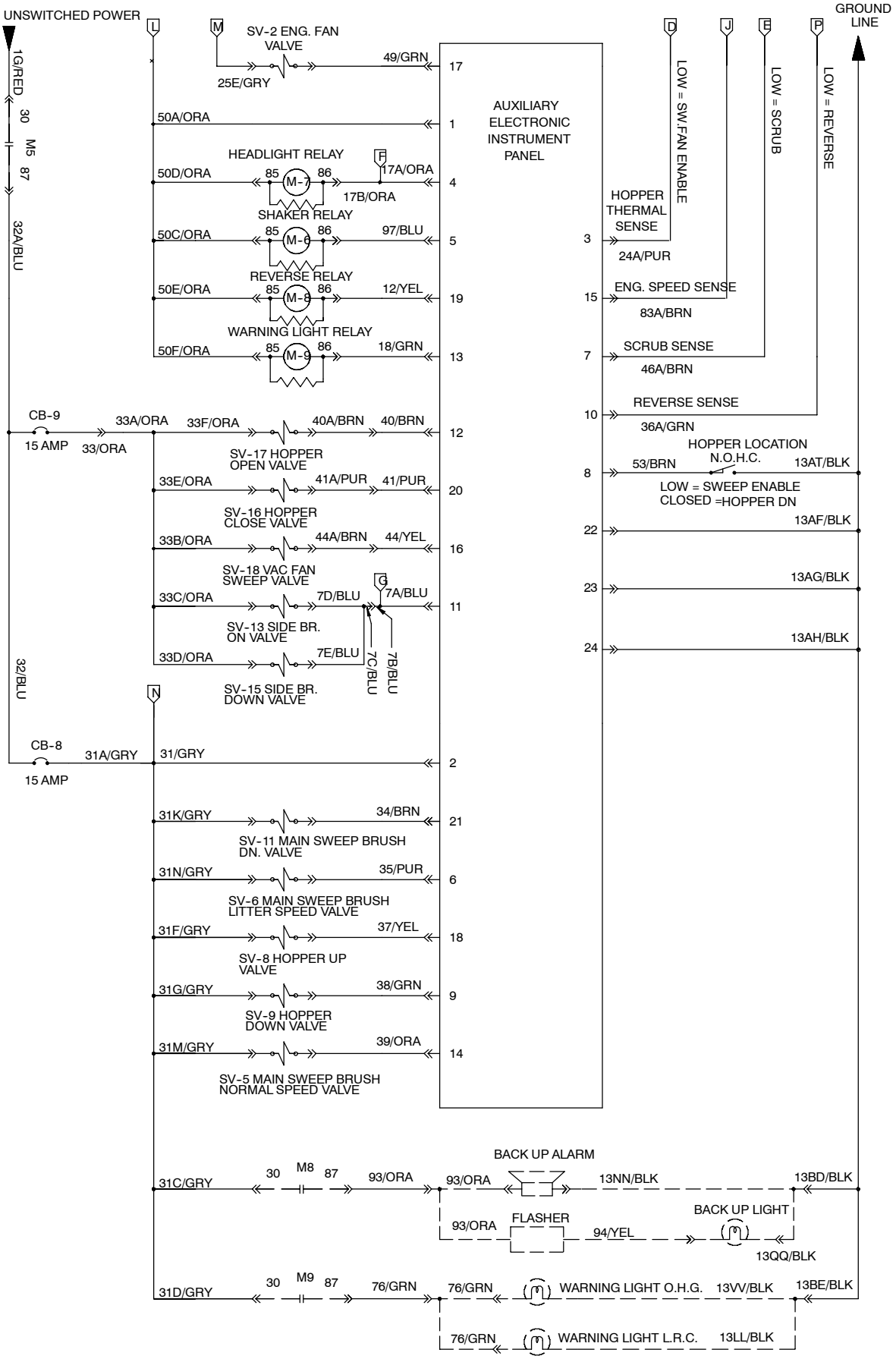

Fig. 110 - Electrical Schematic (013228-013999)

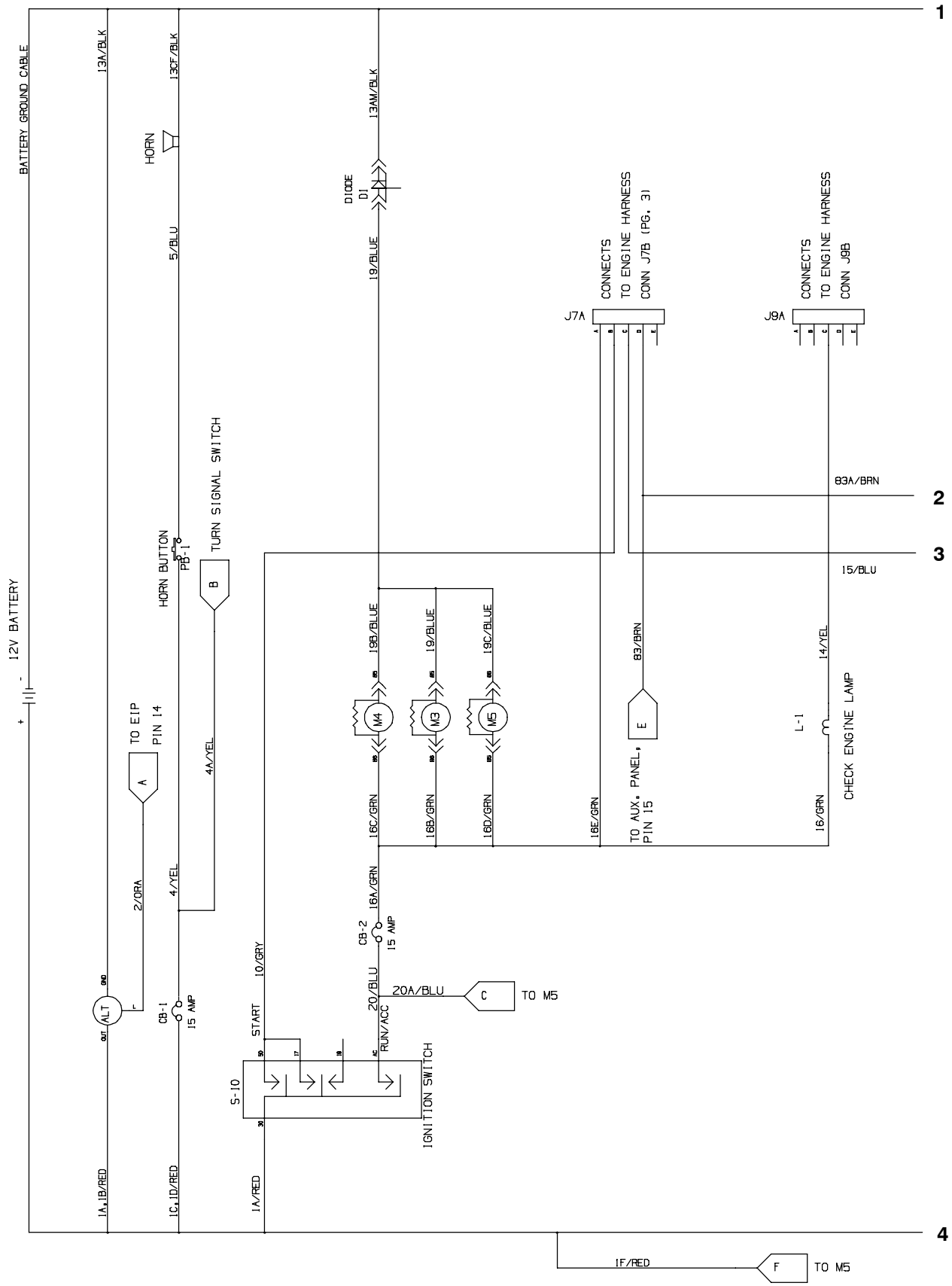

393279 - G. LP

Fig. 110 - Electrical Schematic (013228-013999)

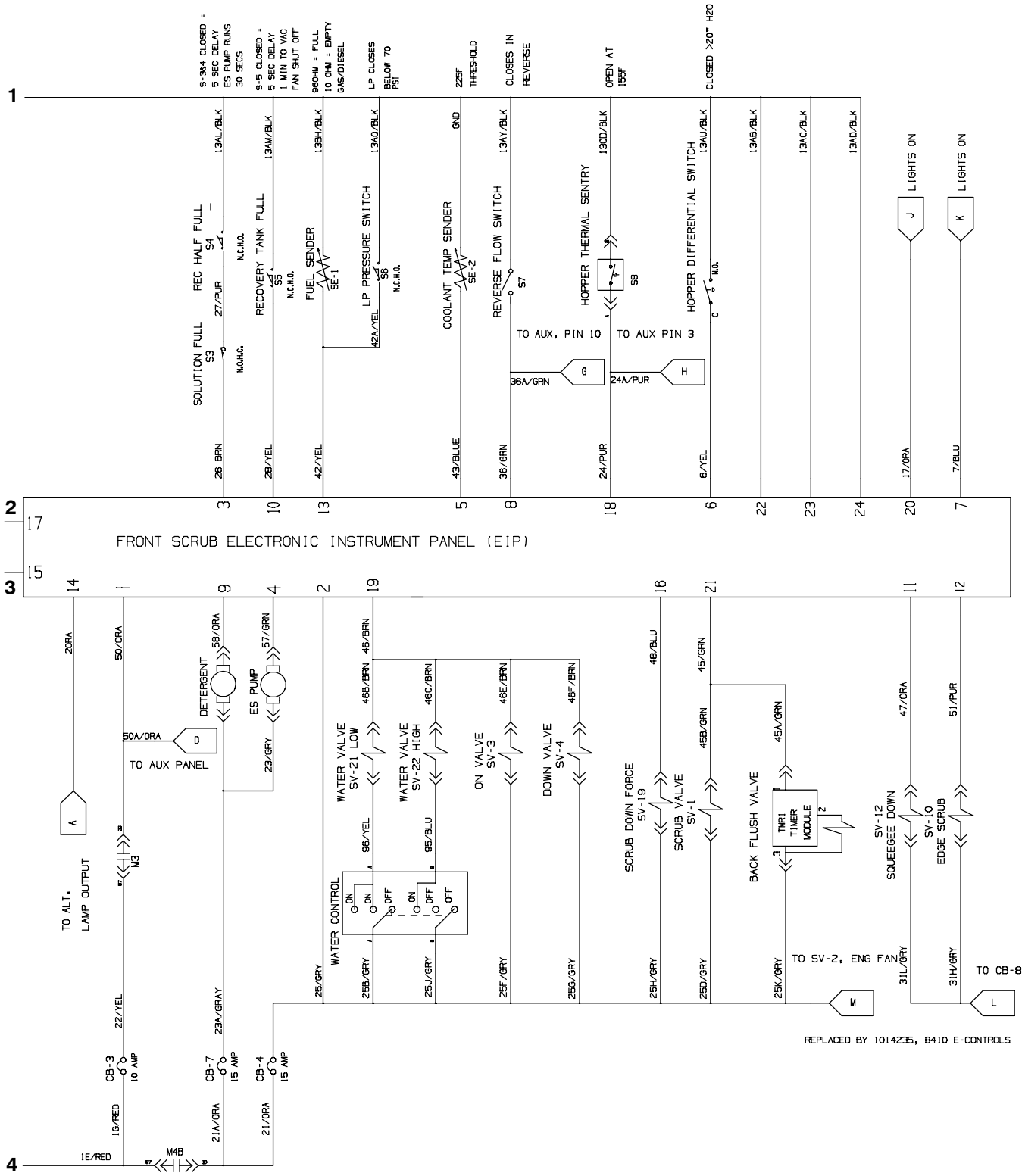

393279 - G. LP

Fig. 110 - Electrical Schematic (013228-013999)

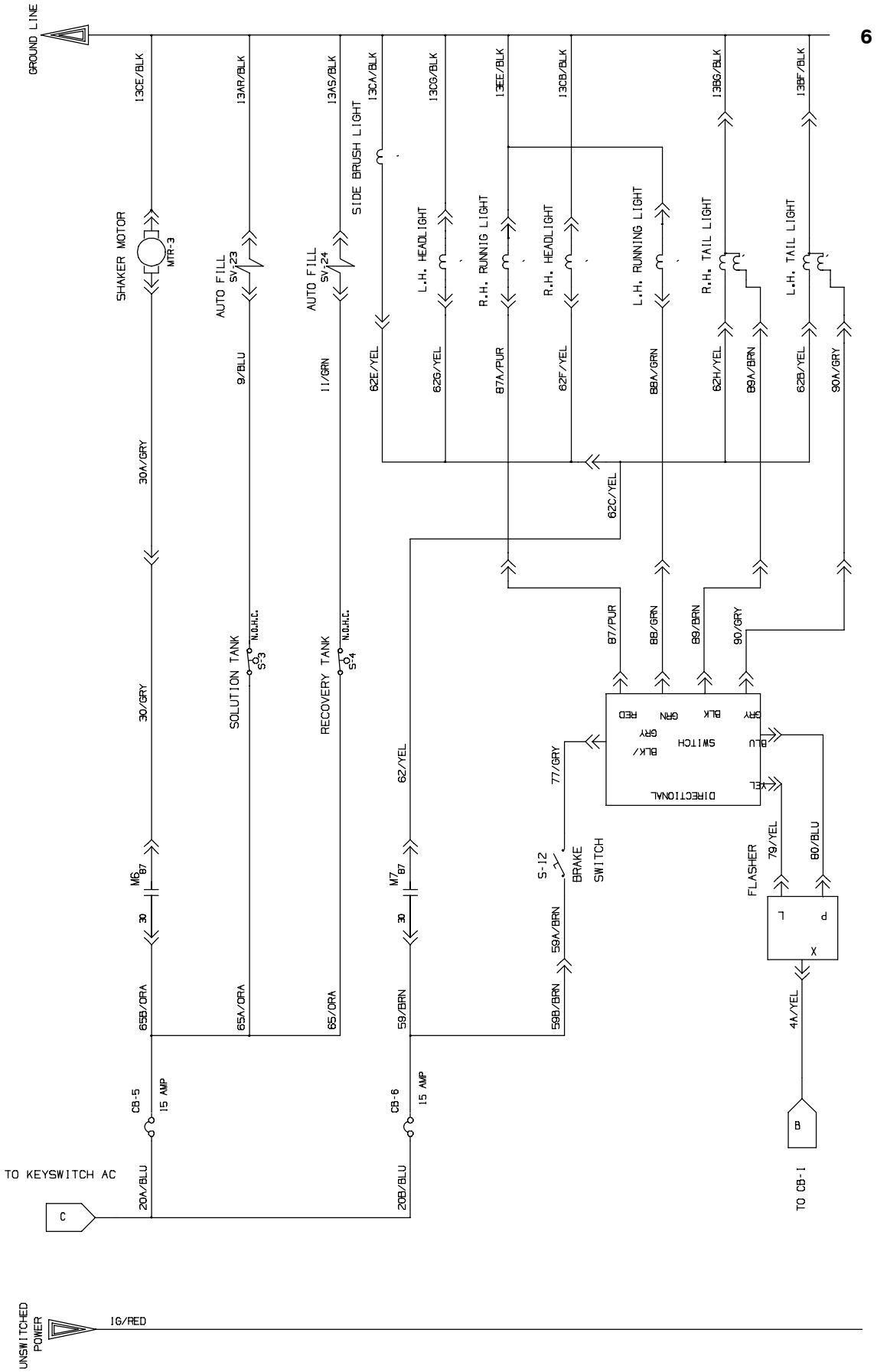

393279 - G. LP

Fig. 110 - Electrical Schematic (013228-013999)

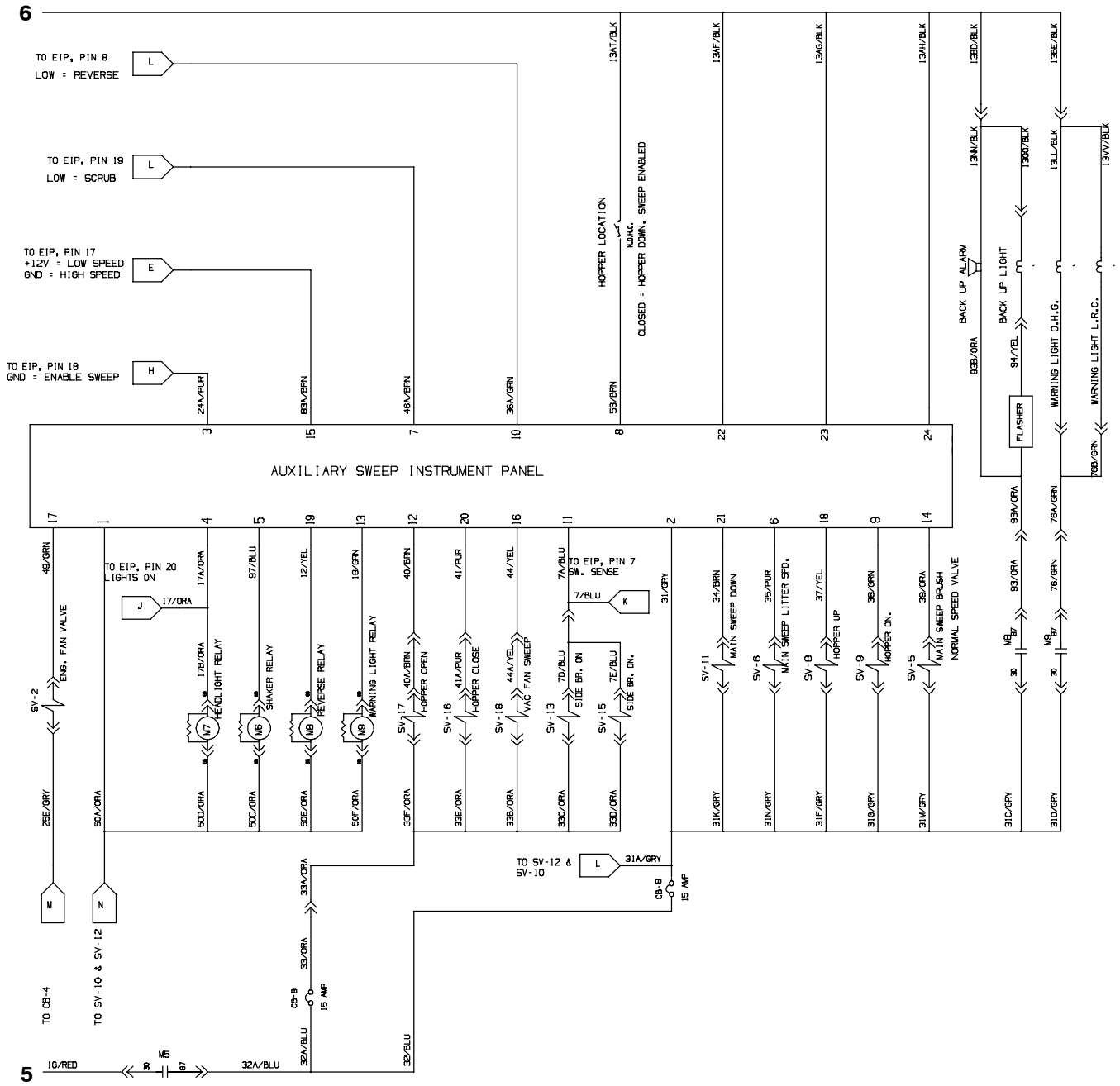

393279 - G. LP

Fig. 110 - Electrical Schematic (013228-013999)

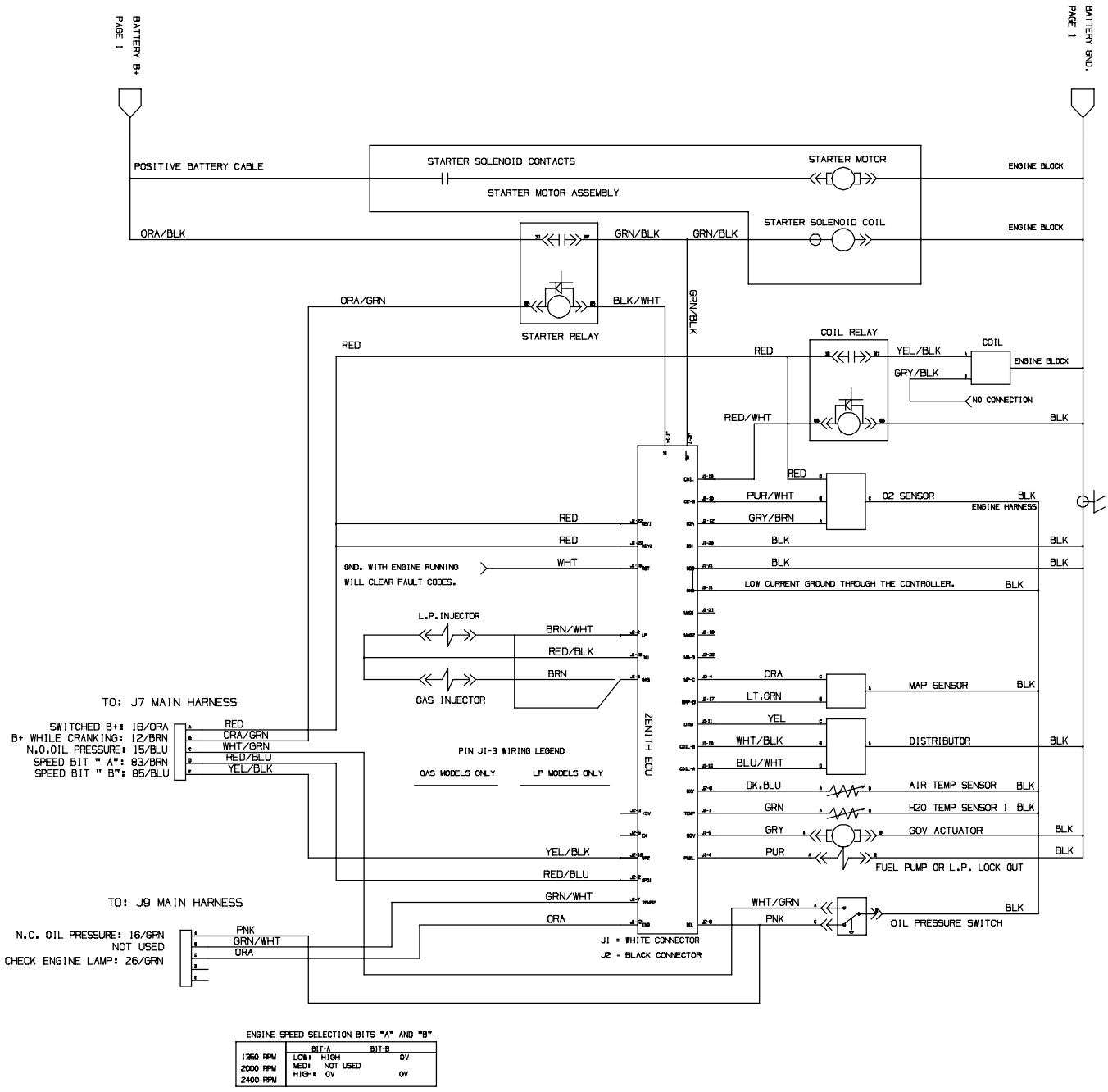

ENGINE SPEED SELECTION BITS "A" AND "B"

	BIT-A	BIT-B
1350 RPM	LOW: HIGH	0V
2000 RPM	MED: NOT USED	
2400 RPM	HIGH: 0V	0V

393279 - G. LP

Fig. 111 - Electrical Schematic (014000-014214)

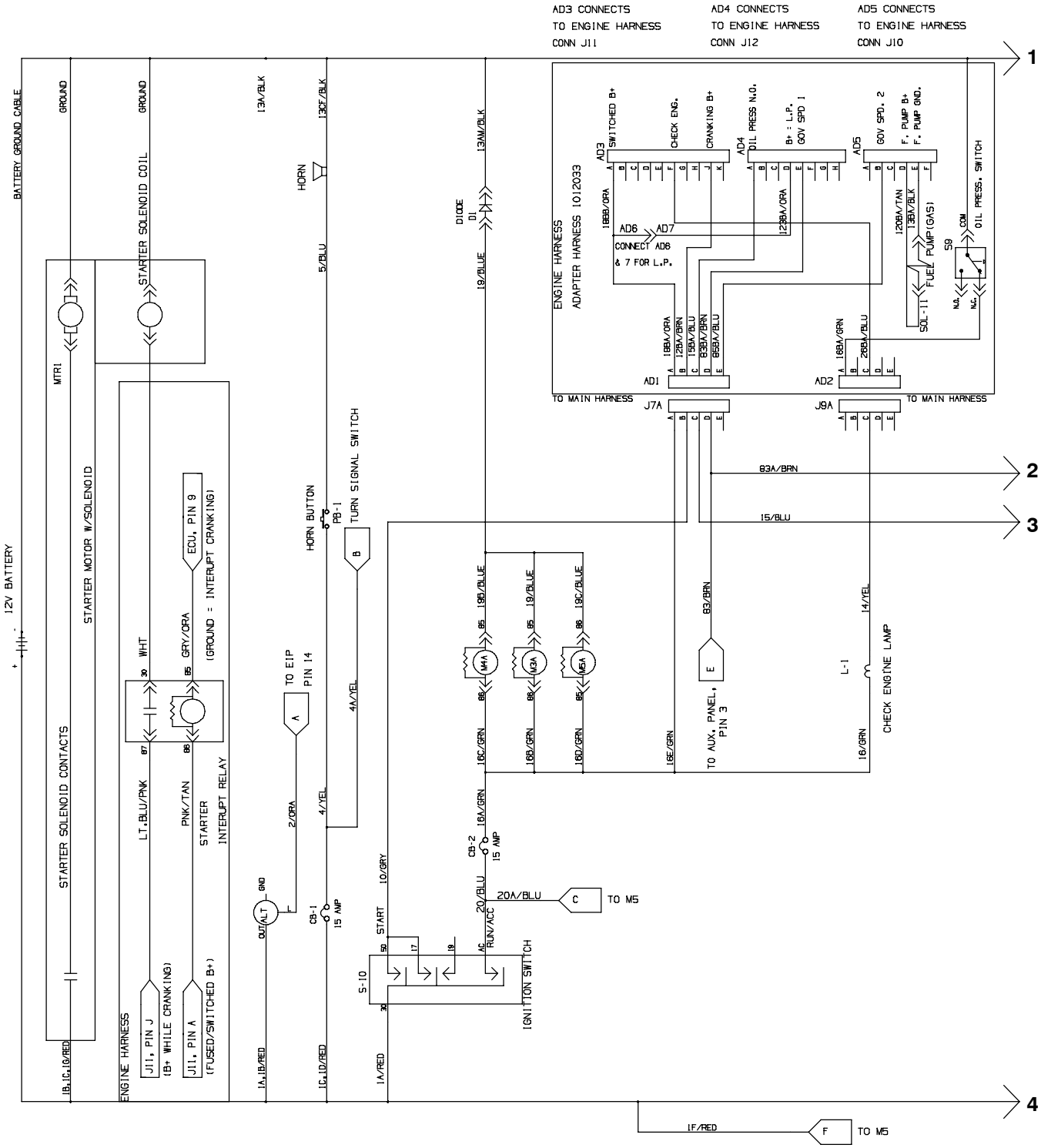

Fig. 111 - Electrical Schematic (014000-014214)

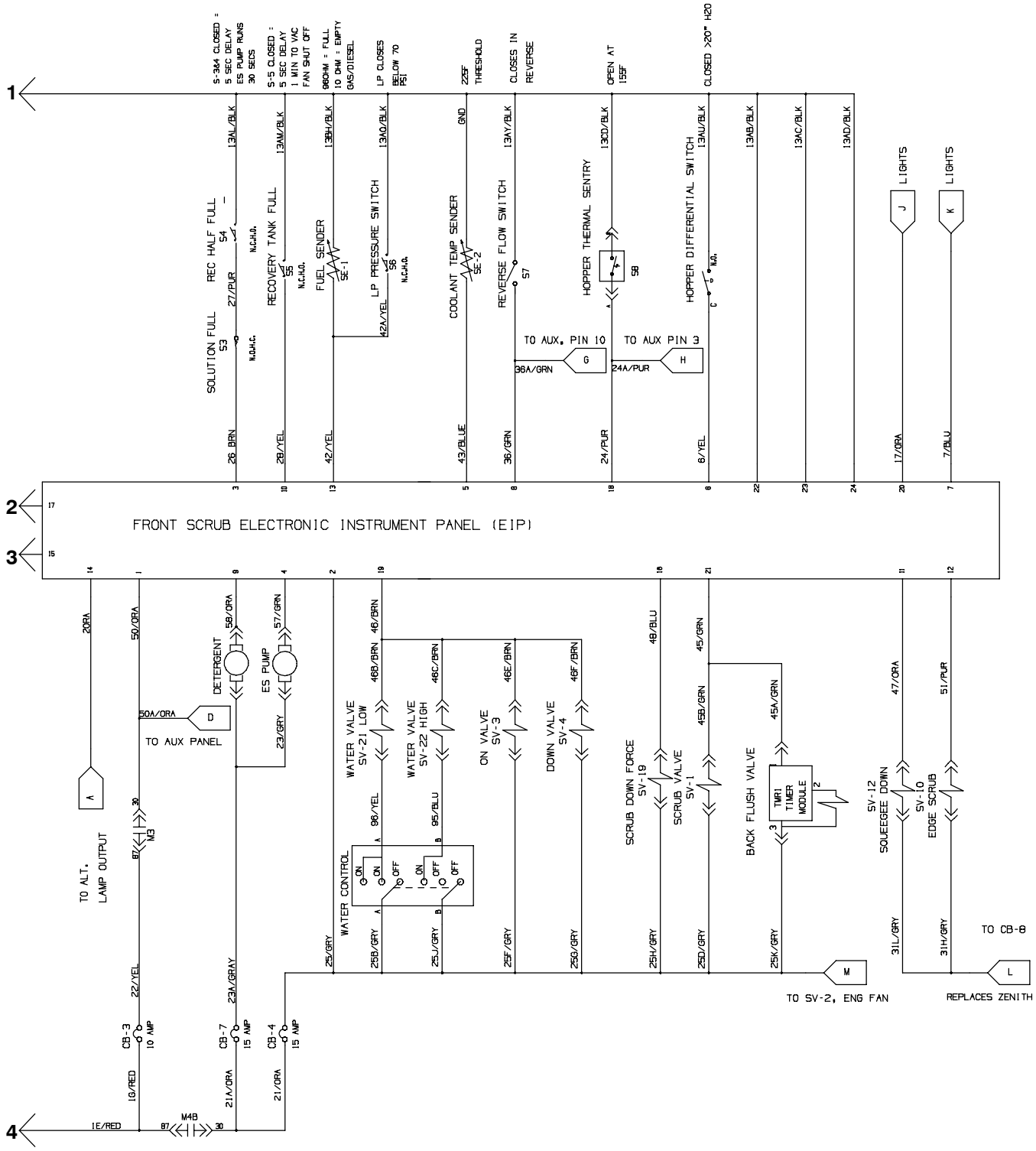

1014235 - G. LP

Fig. 111 - Electrical Schematic (014000-014214)

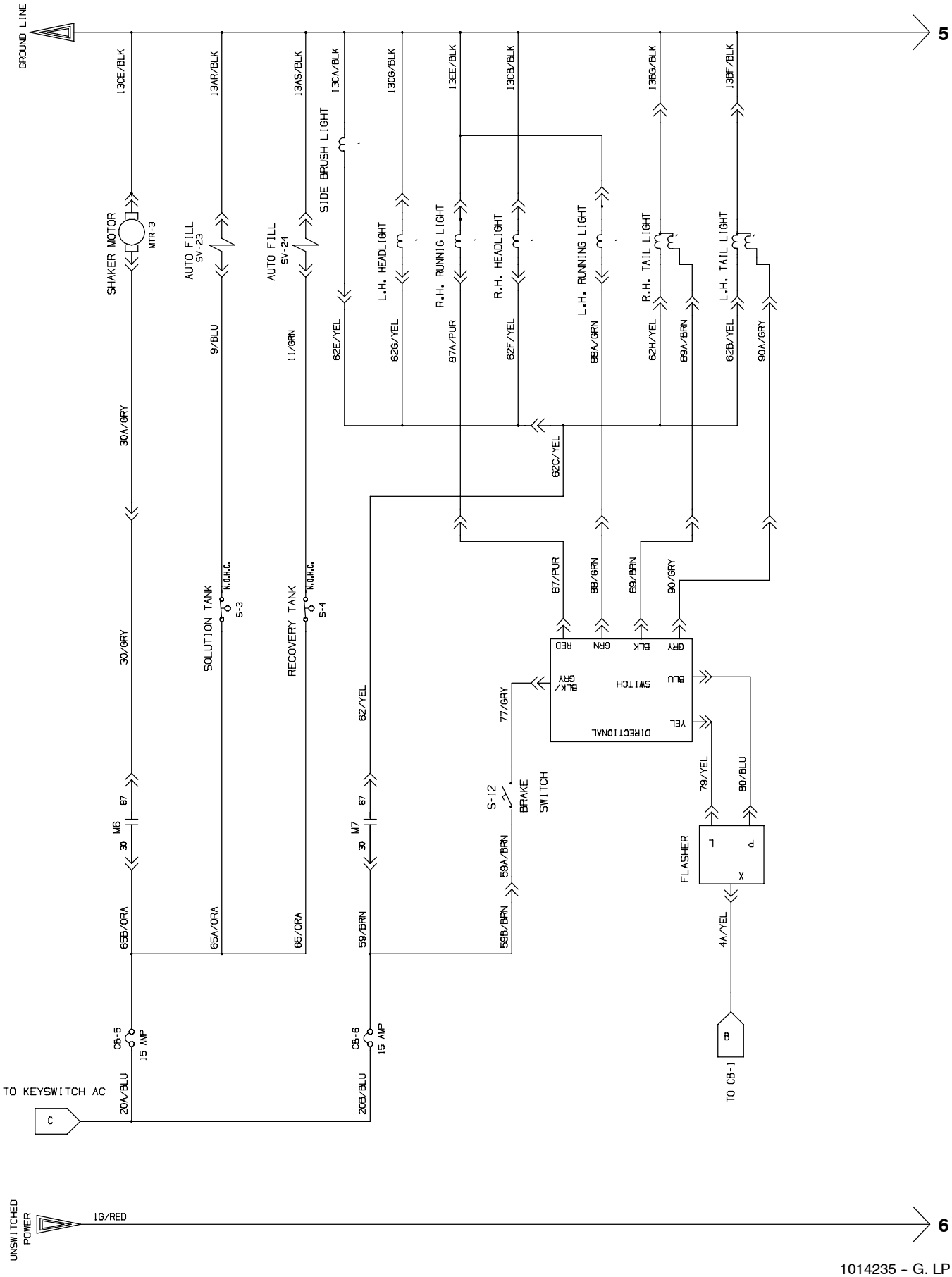

1014235 - G. LP

Fig. 111 - Electrical Schematic (014000-014214)

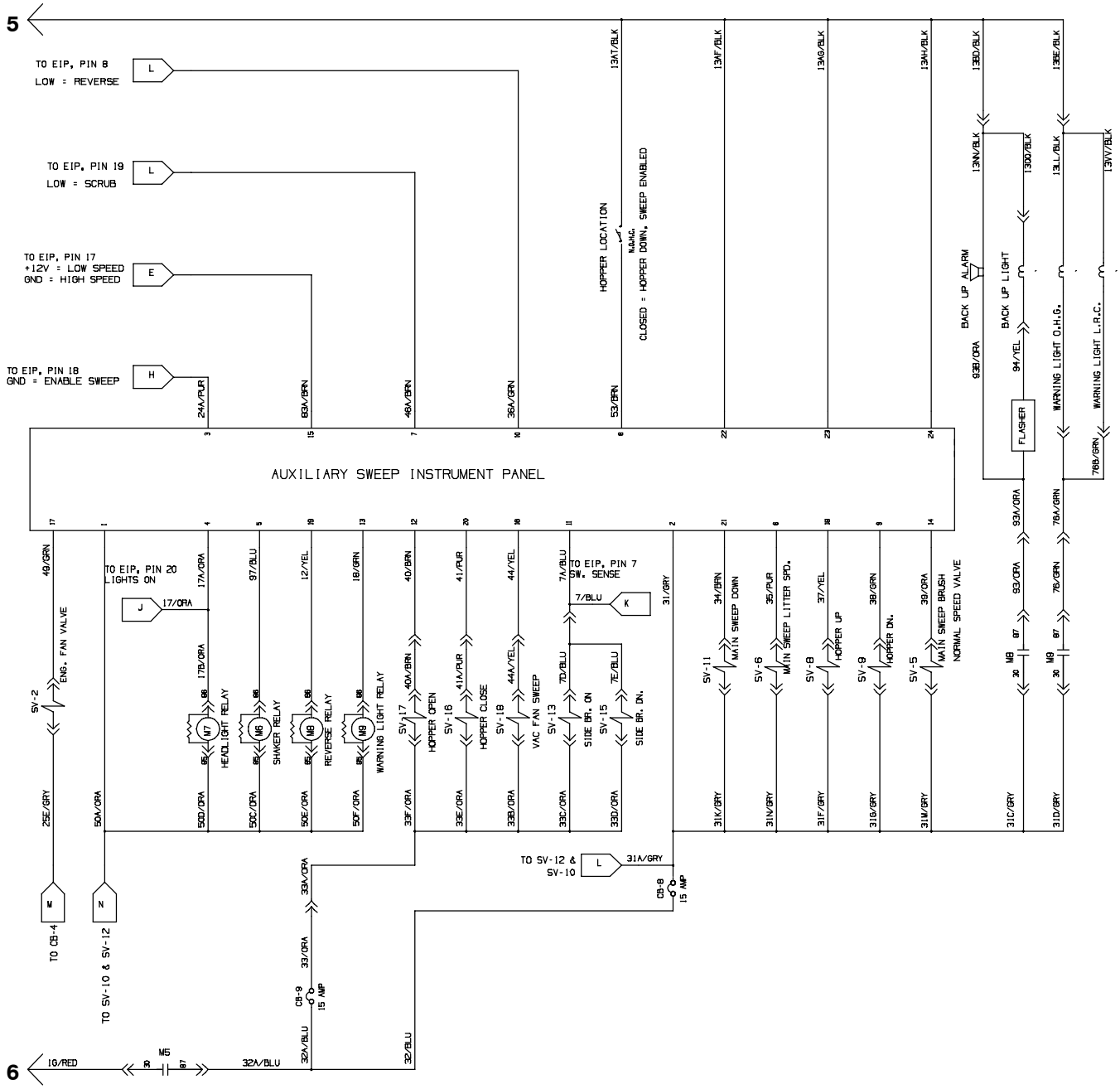

1014235 - G. LP

Fig. 111 - Electrical Schematic (014000-014214)

E - CONTROLS FUEL SYSTEM CONTROLLER

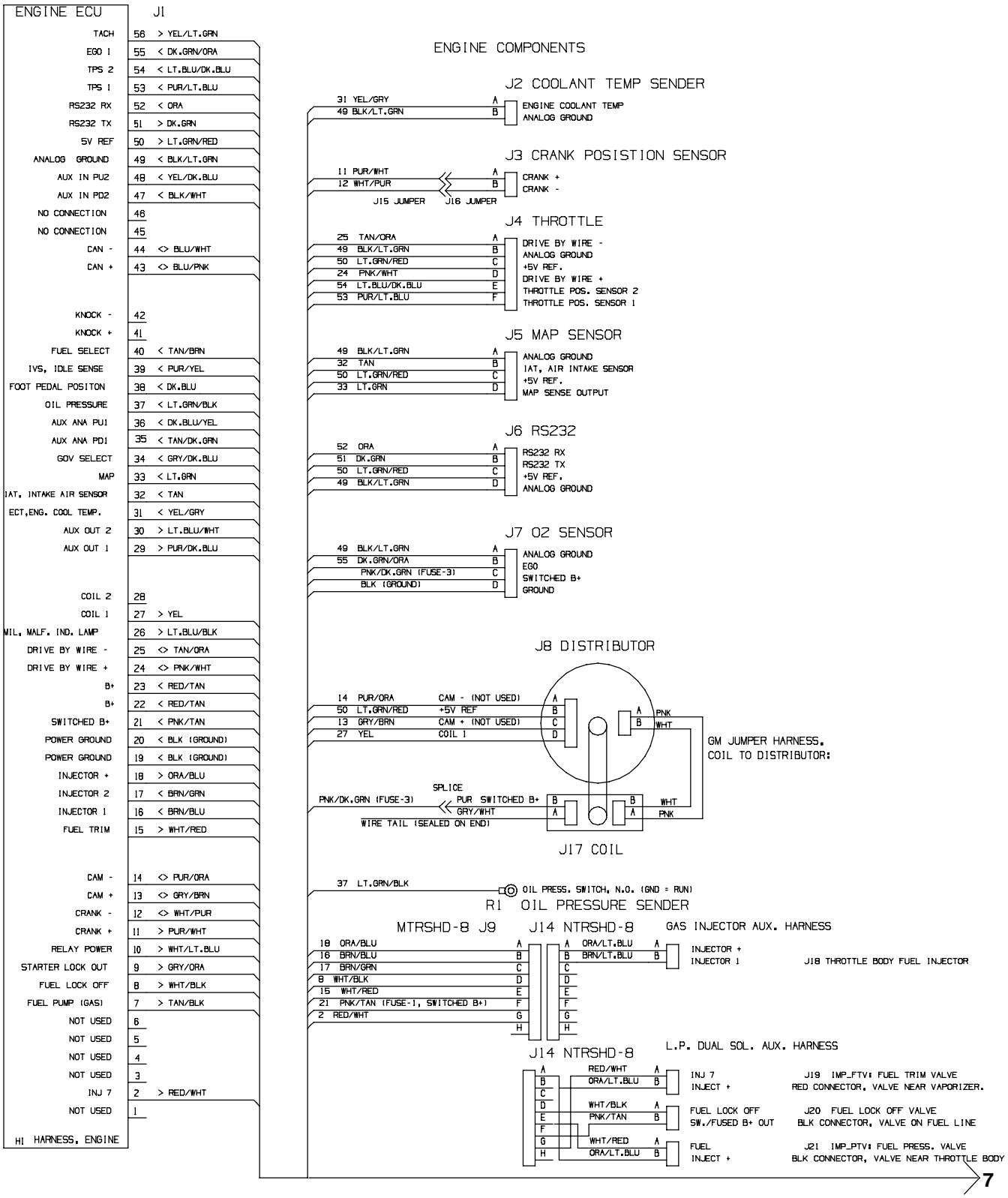

1014235 - G. LP

Fig. 111 - Electrical Schematic (014000-014214)

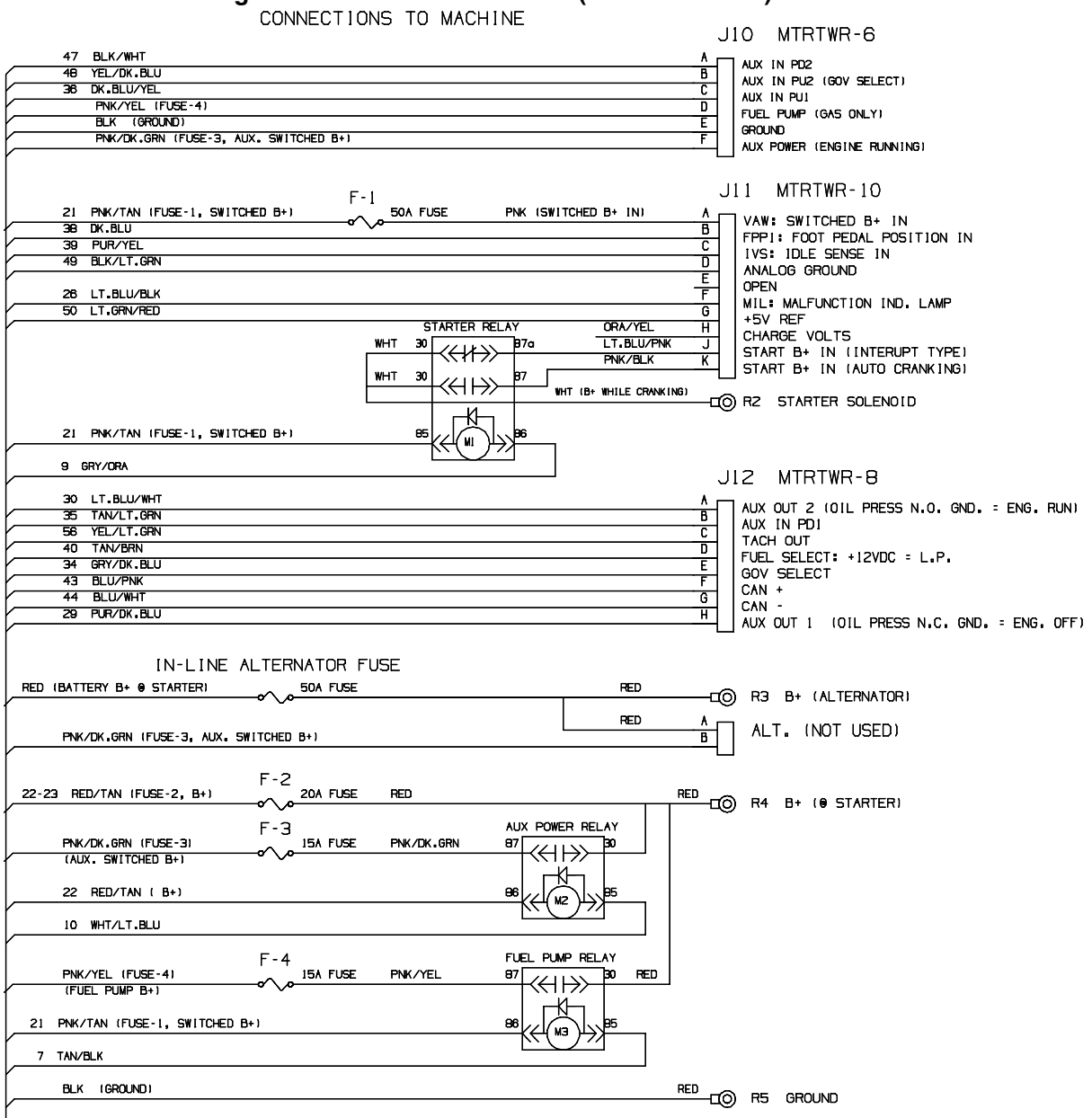

7

1014235 - G. LP

Fig. 112 - Electrical Schematic (014215-)

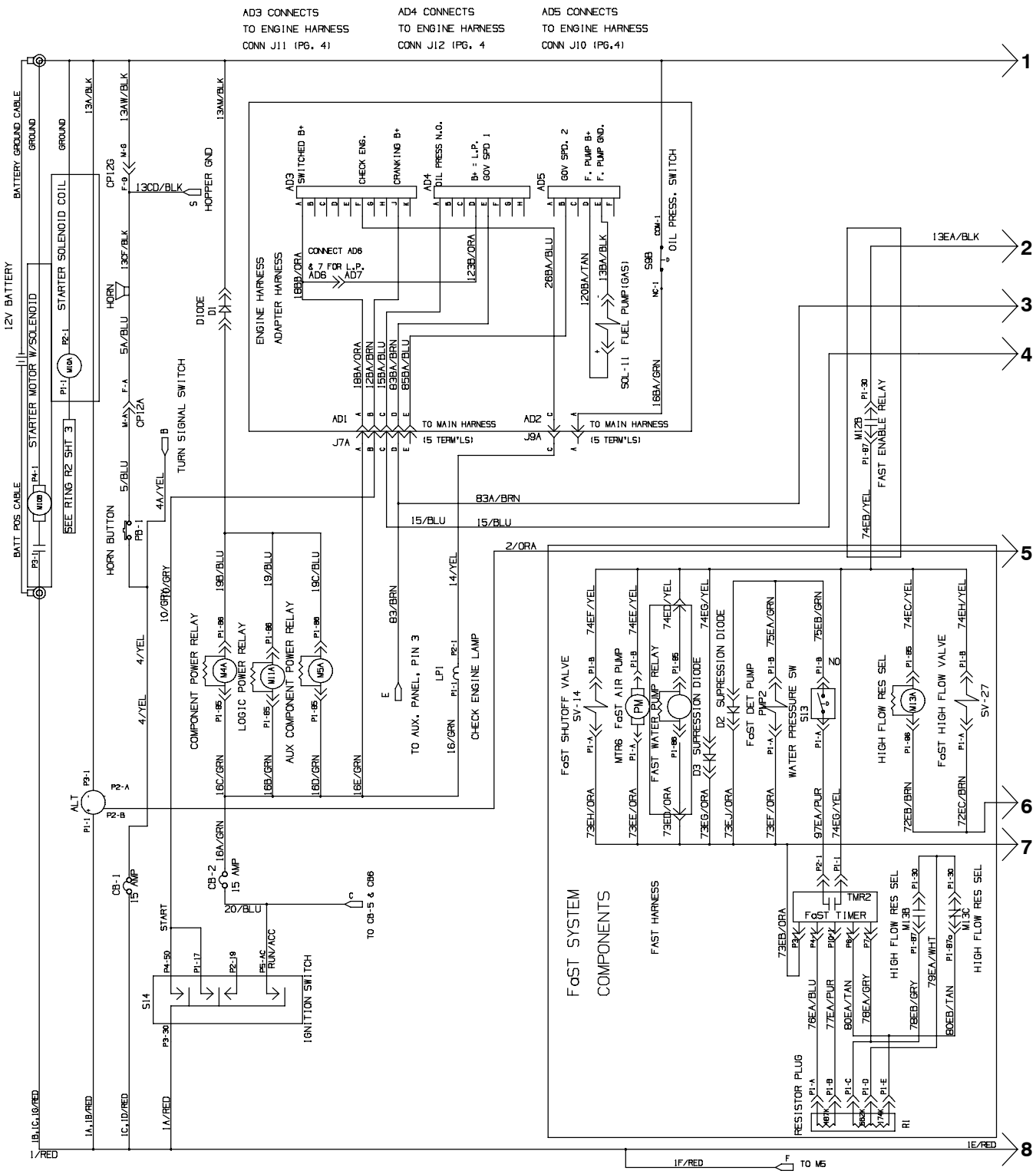

1014235 - G. LP

Fig. 112 - Electrical Schematic (014215-)

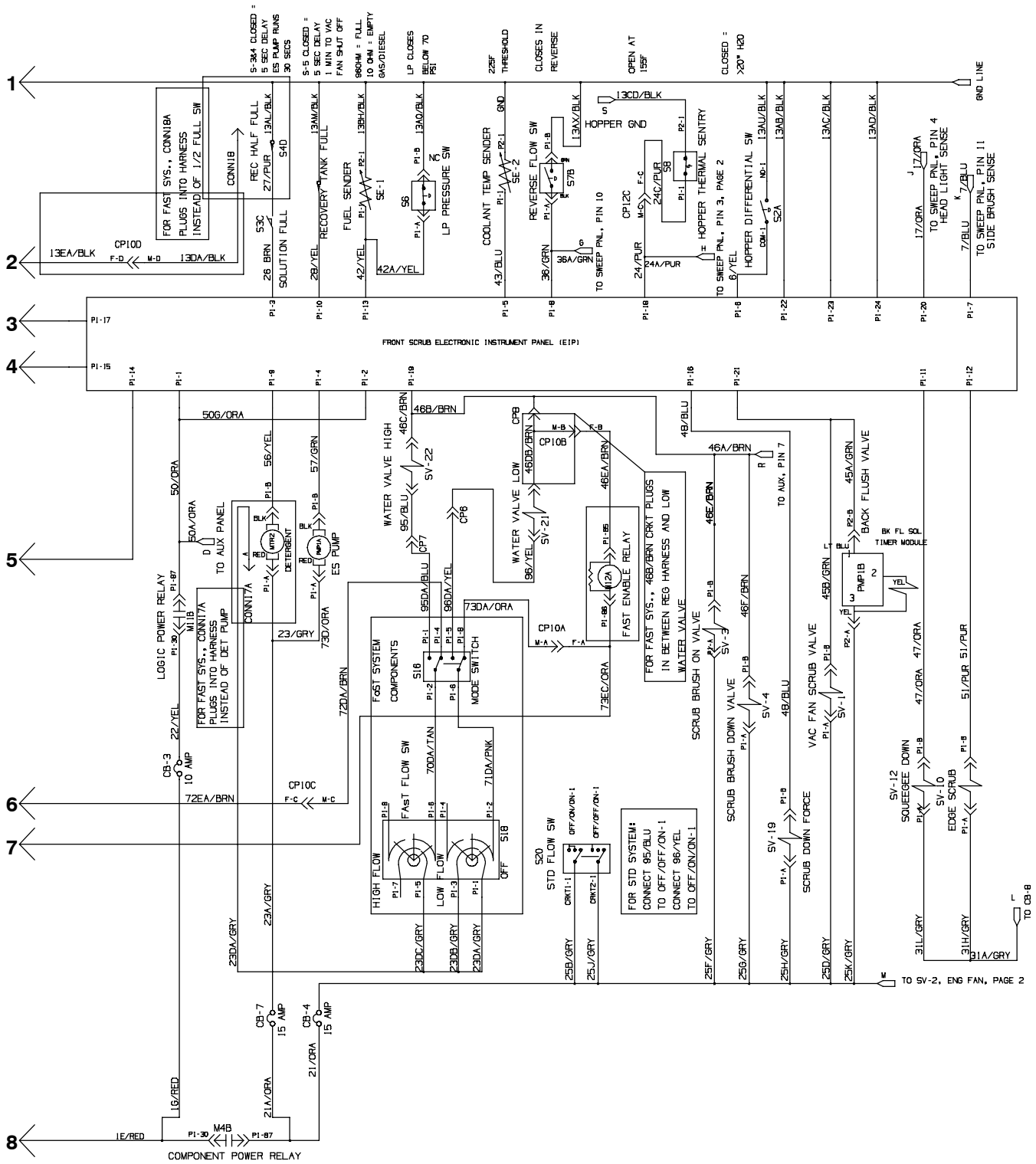

1014235 - G. LP

Fig. 112 - Electrical Schematic (014215-)

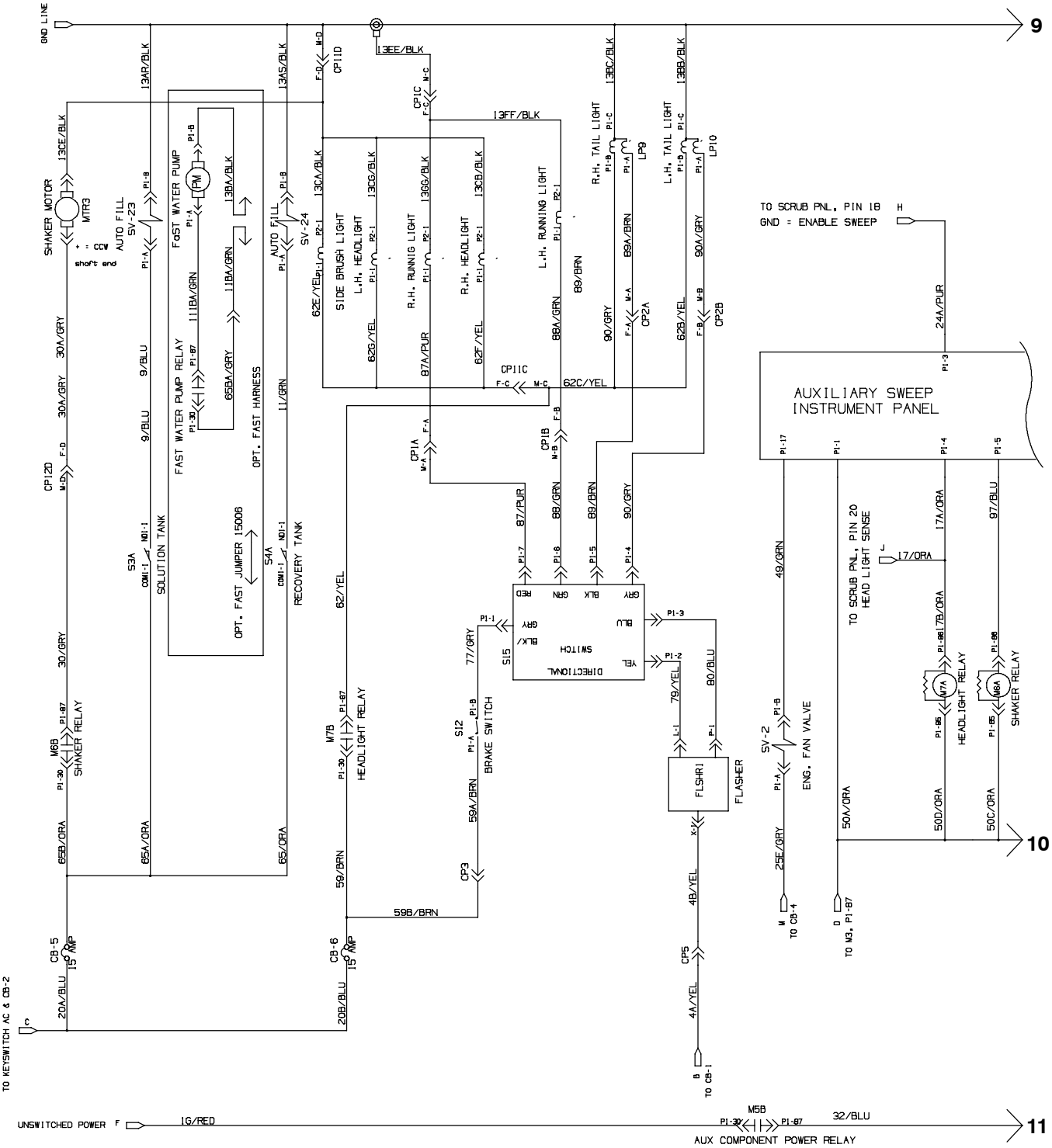

1014235 - G. LP

Fig. 112 - Electrical Schematic (014215-)

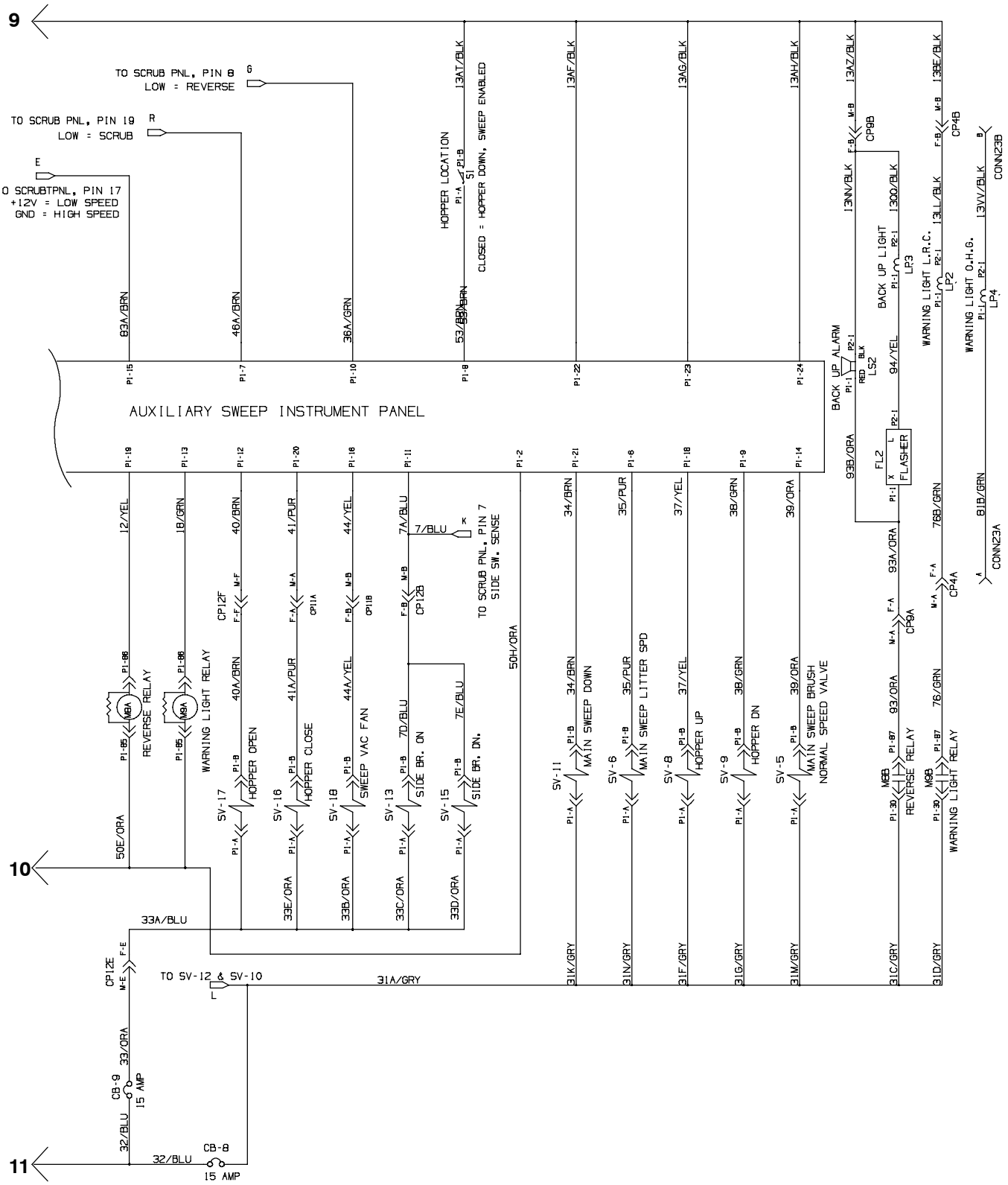

1014235 - G. LP

Home Find... Go To..

Fig. 112 - Electrical Schematic (014215-)

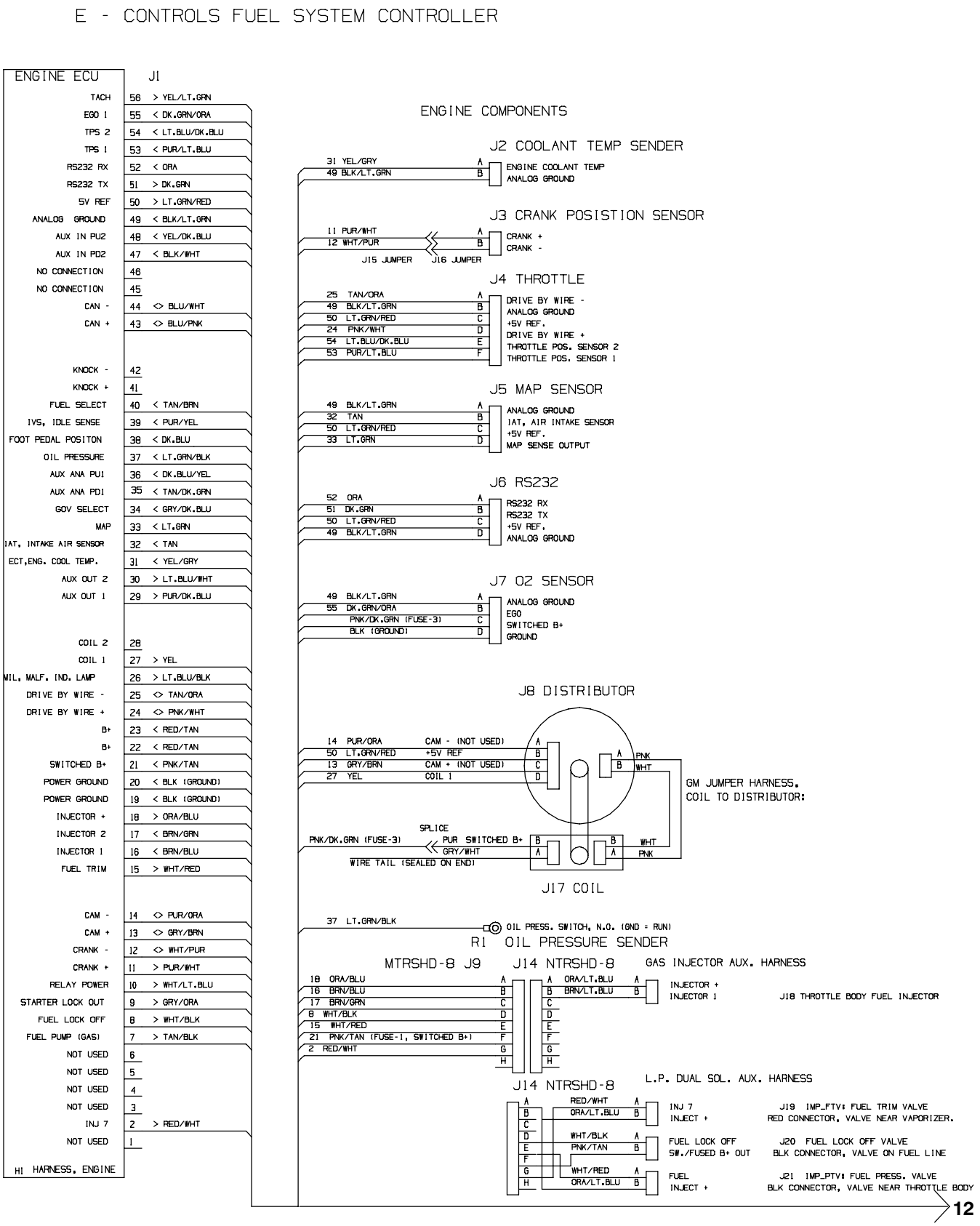

1014235 - G. LP

Fig. 112 - Electrical Schematic (014215-)

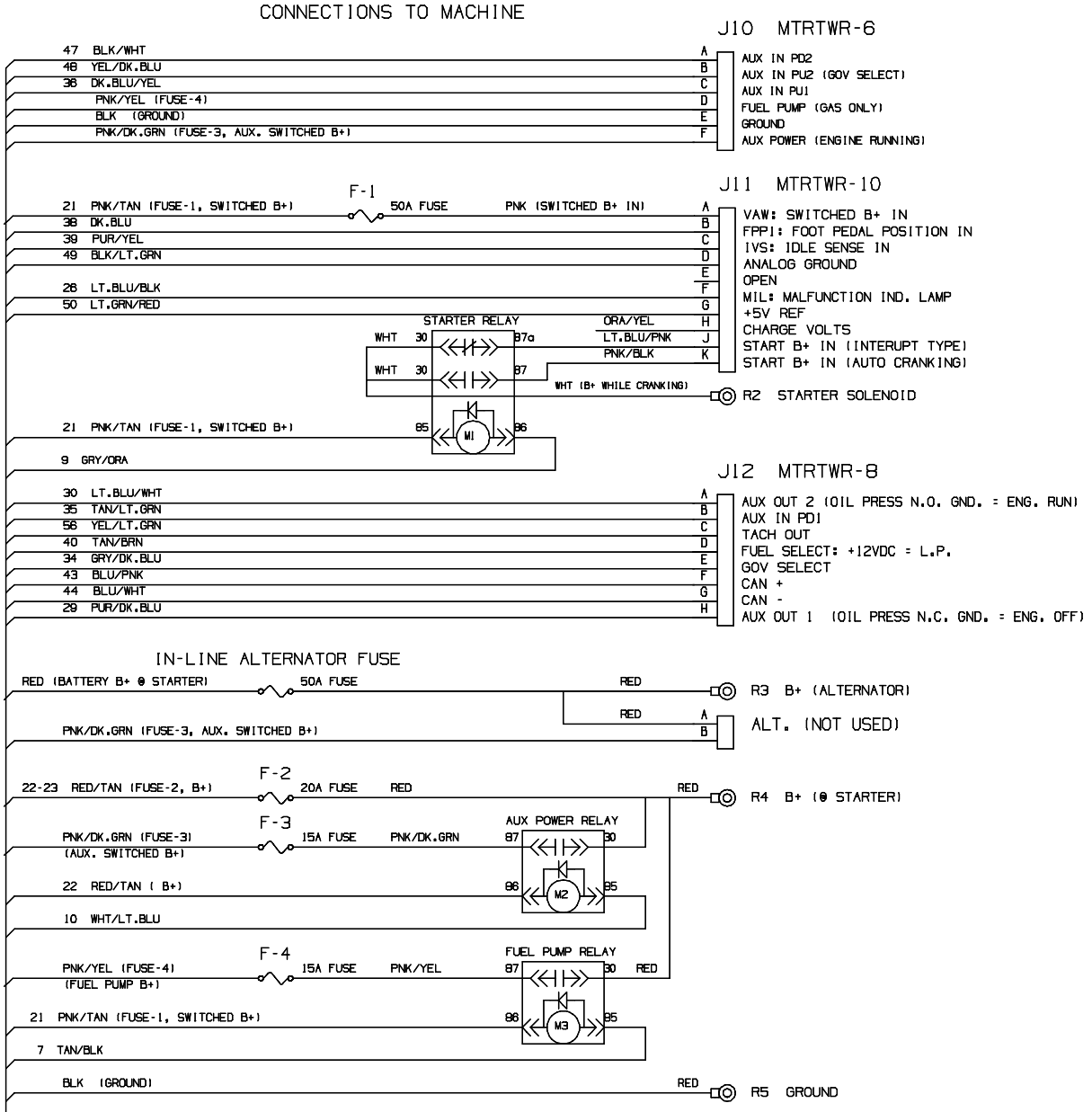

12

1014235 - G. LP

Fig. 113 - Wire Harnesses Group (000000-013227)

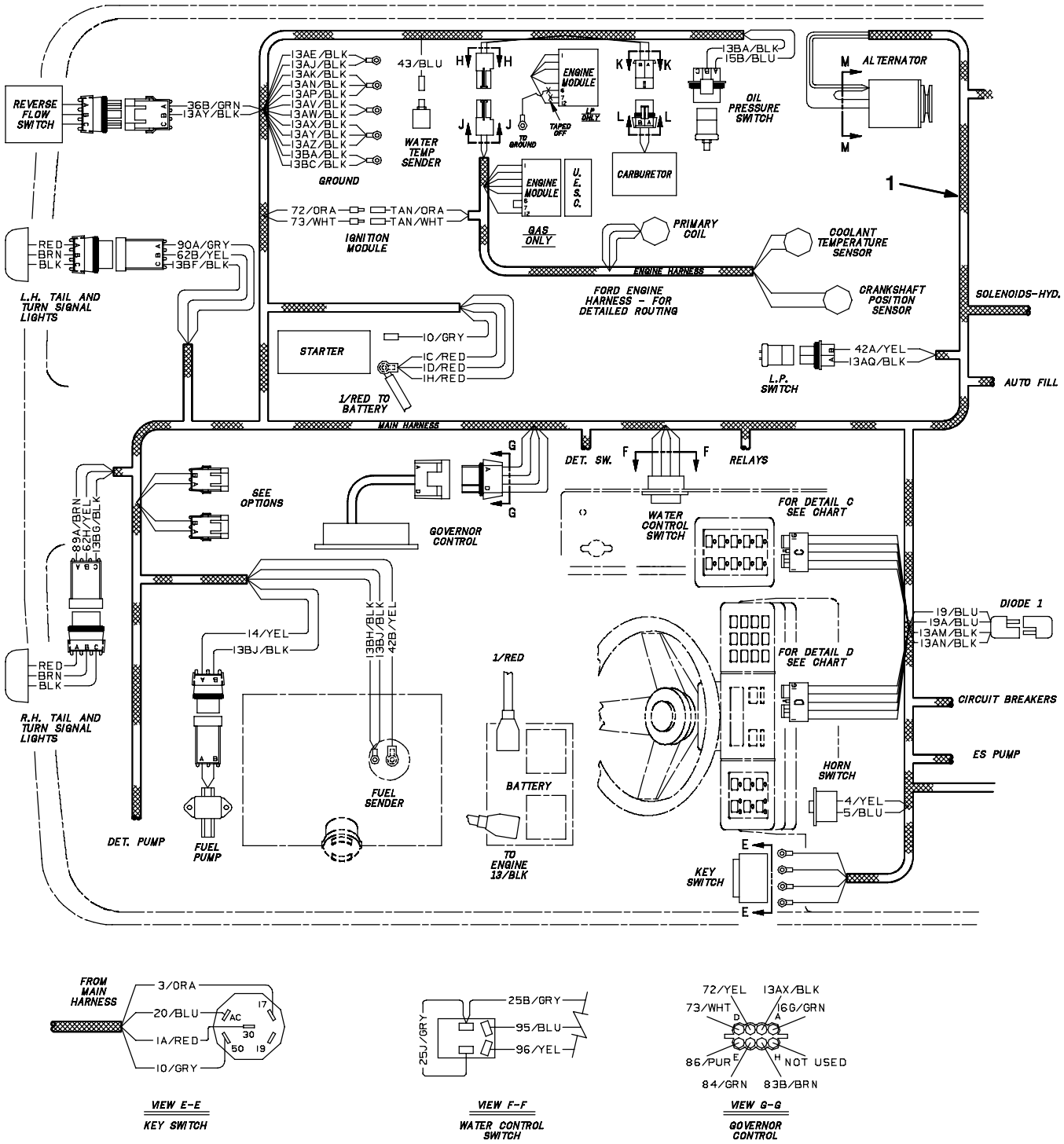

Fig. 113 - Wire Harnesses Group (000000-013227)

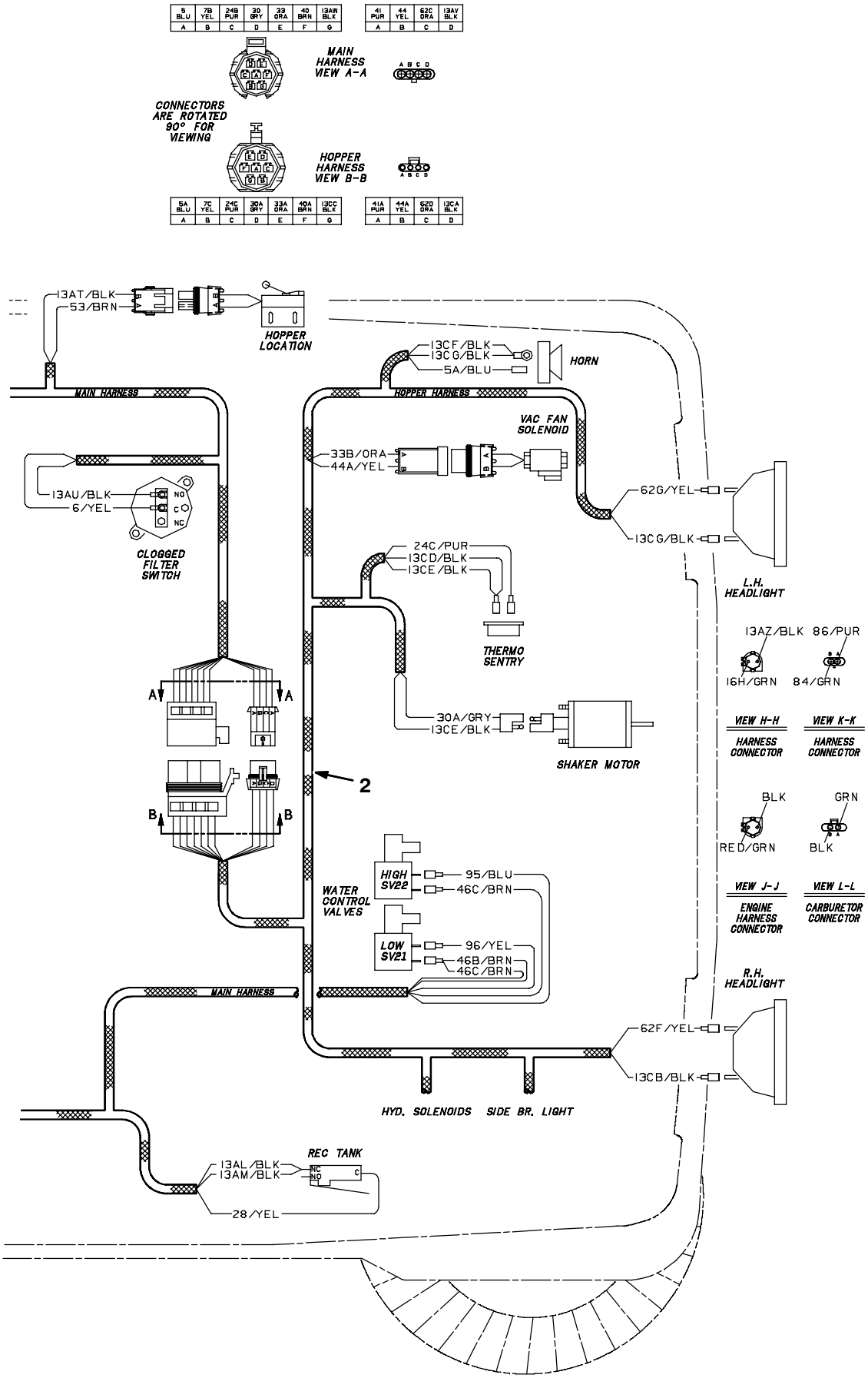

Fig. 113 - Wire Harnesses Group (000000-013227)

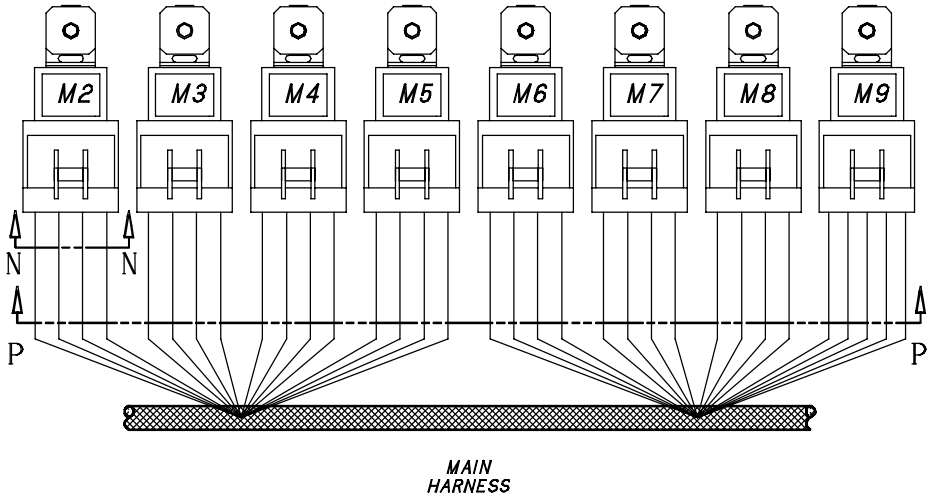

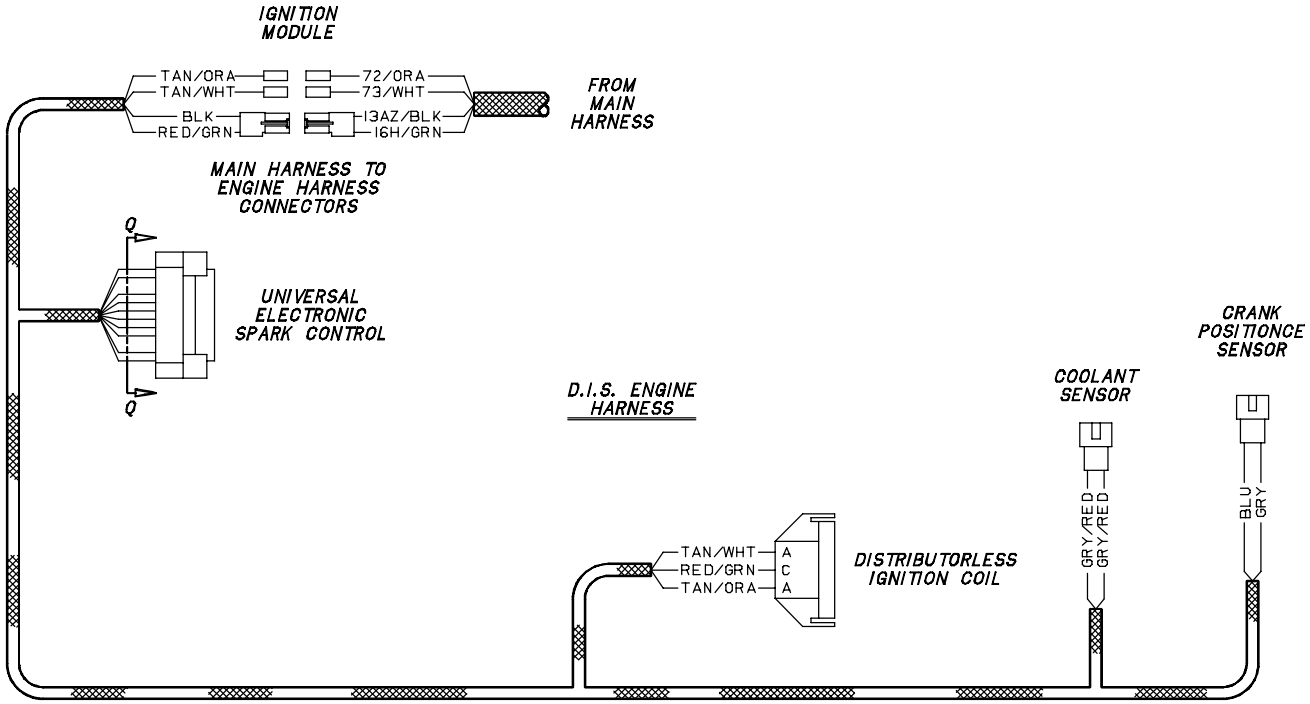

Fig. 113 - Wire Harnesses Group (000000-013227)

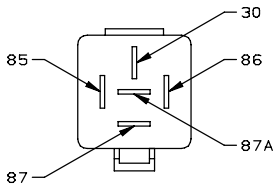

85 COIL+
86 COIL -
30 COMMON CONTACT
87 N.O. CONTACT
87A N.C. CONTACT

VIEW N-N

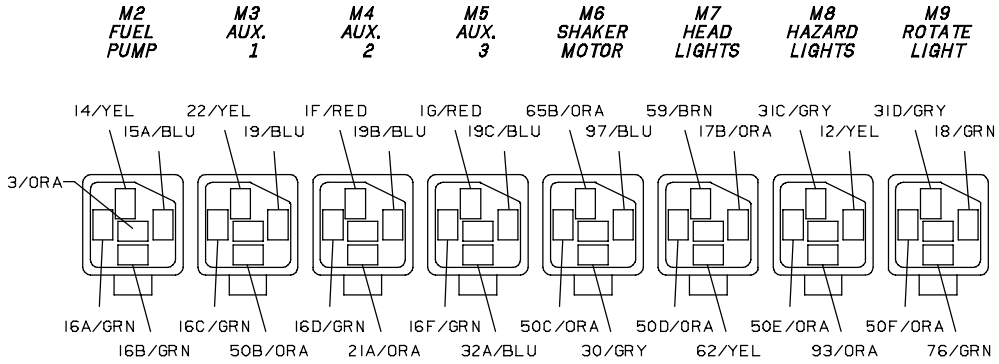

VIEW P-P

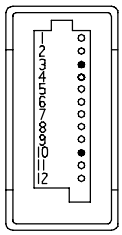

#1 — BLU .....CRANKSHAFT POS.
#2 — GRY .....CRANKSHAFT POS.
#3 — NOT USED...NOT USED
#4 — GRY/RED.....COOLANT TEMP.
#5 — GRY/RED.....COOLANT TEMP.
#6 — YEL/BLK.....ADVANCE SPARK 4°
#7 — YEL/BLK.....ADVANCE SPARK 2°
#8 — RED/GRN.....IGN. +12
#9 — BLK .....GROUND
#10 — NOT USED...NOT USED
#11 — TAN/WHT .....COIL #1
#12 — TAN/ORA .....COIL #2

VIEW Q-Q

UNIVERSAL ELECTRONIC SPARK CONTROL

Fig. 113 - Wire Harnesses Group (000000-013227)

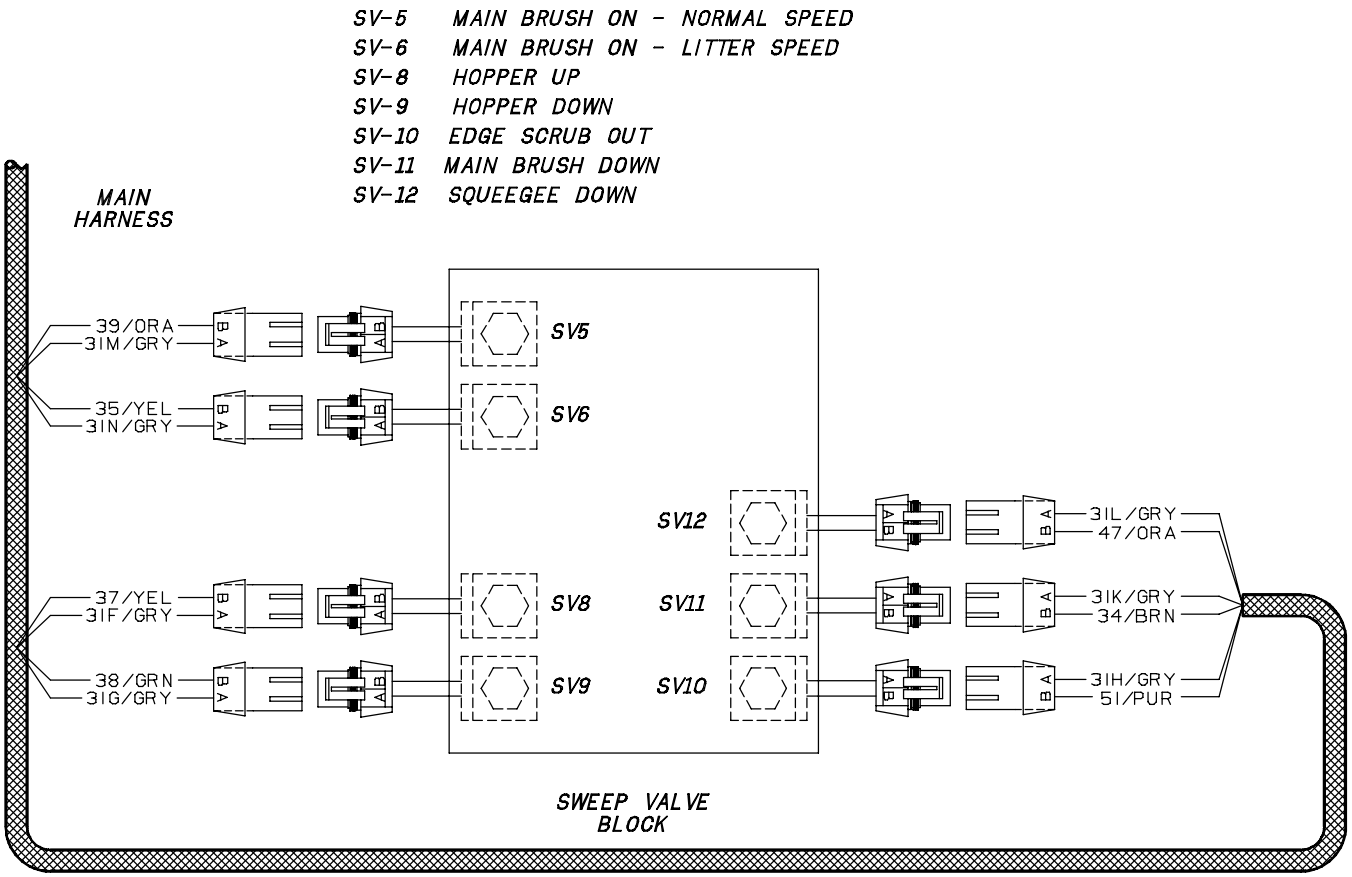

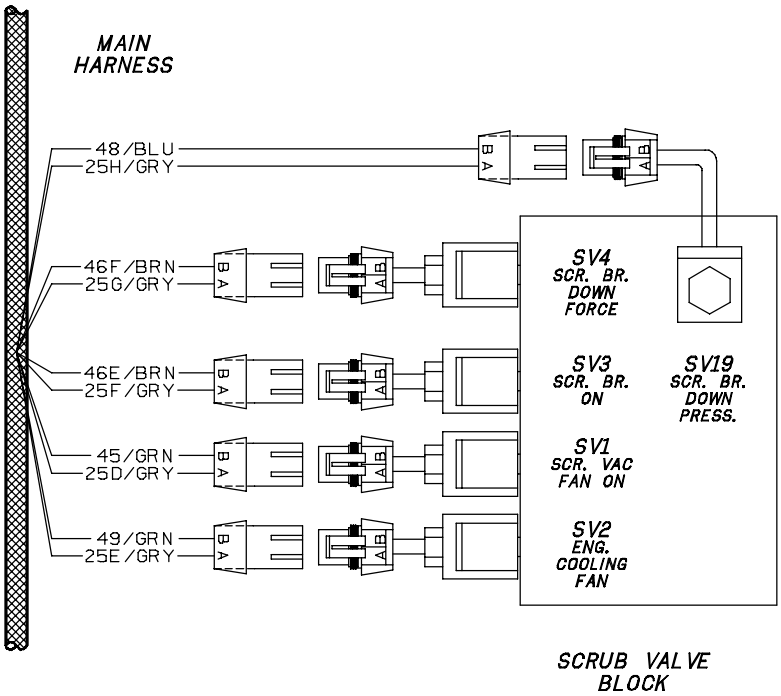

Fig. 113 - Wire Harnesses Group (000000-013227)

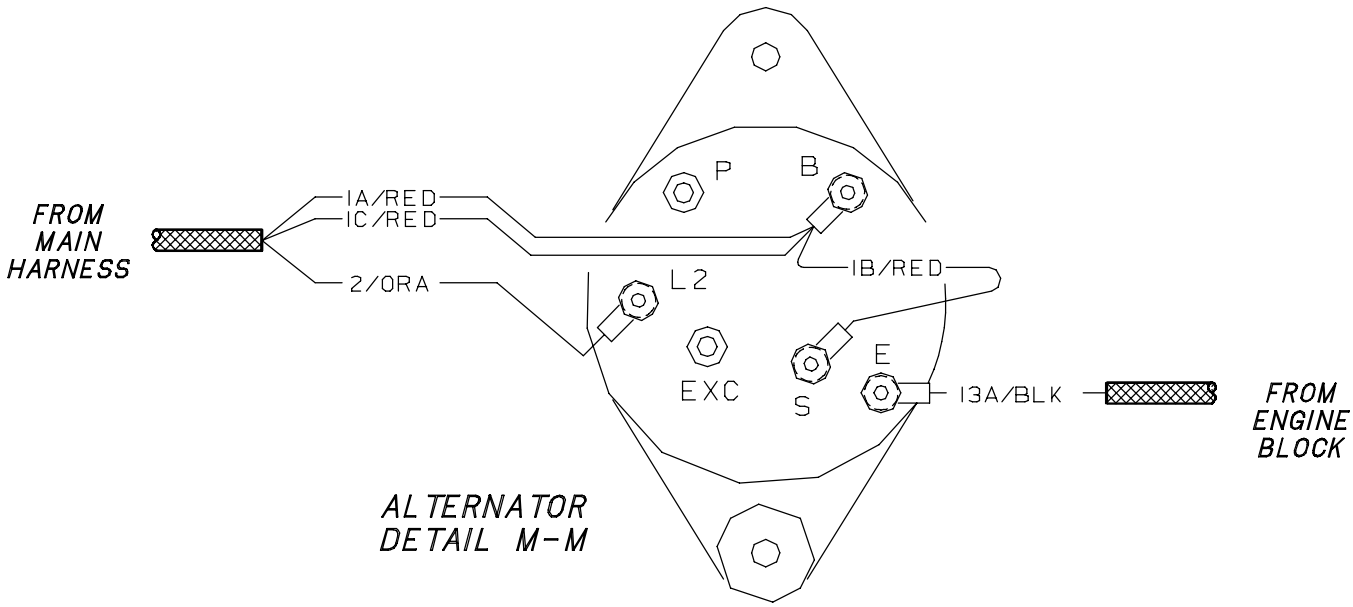

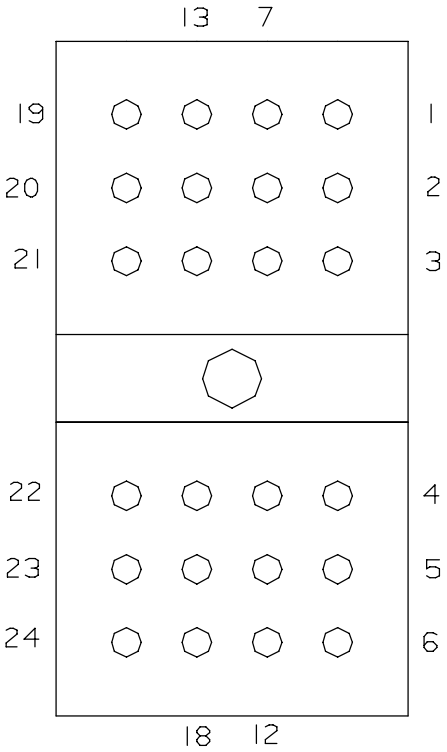

MAIN/AUXILLARY INSTRUMENT PANEL REAR VIEW (REFERENCE ONLY)

CONNECTOR WIRING

SOC. NO.	CONN. C.	CONN. D.
1	50A/GRY	50J/ORA
2	50H/ORA	50G/ORA
3	24A/PUR	26/BRN
4	17A/ORA	57/GRN
5	97/BLU	43/BLU
6	35/YEL	6/YEL
7	46A/BRN	7/BLU
8	53/BRN	36/GRN
9	38/GRN	56/YEL
10	36A/GRN	28/YEL
11	7A/BLU	47/ORA
12	40/BRN	51/PUR
13	18/GRN	42/YEL
14	39/ORA	2/ORA
15	83A/BRN	15/BLU
16	44/YEL	48/BLU
17	49/GRN	83/BRN
18	37/YEL	24/PUR
19	12/YEL	46/BRN
20	41/PUR	17/ORA
21	34/BRN	45/GRN
22	13AF/BLK	13AB/BLK
23	13AG/BLK	13AC/BLK
24	13AH/BLK	13AD/BLK

Fig. 113 - Wire Harnesses Group (000000-013227)

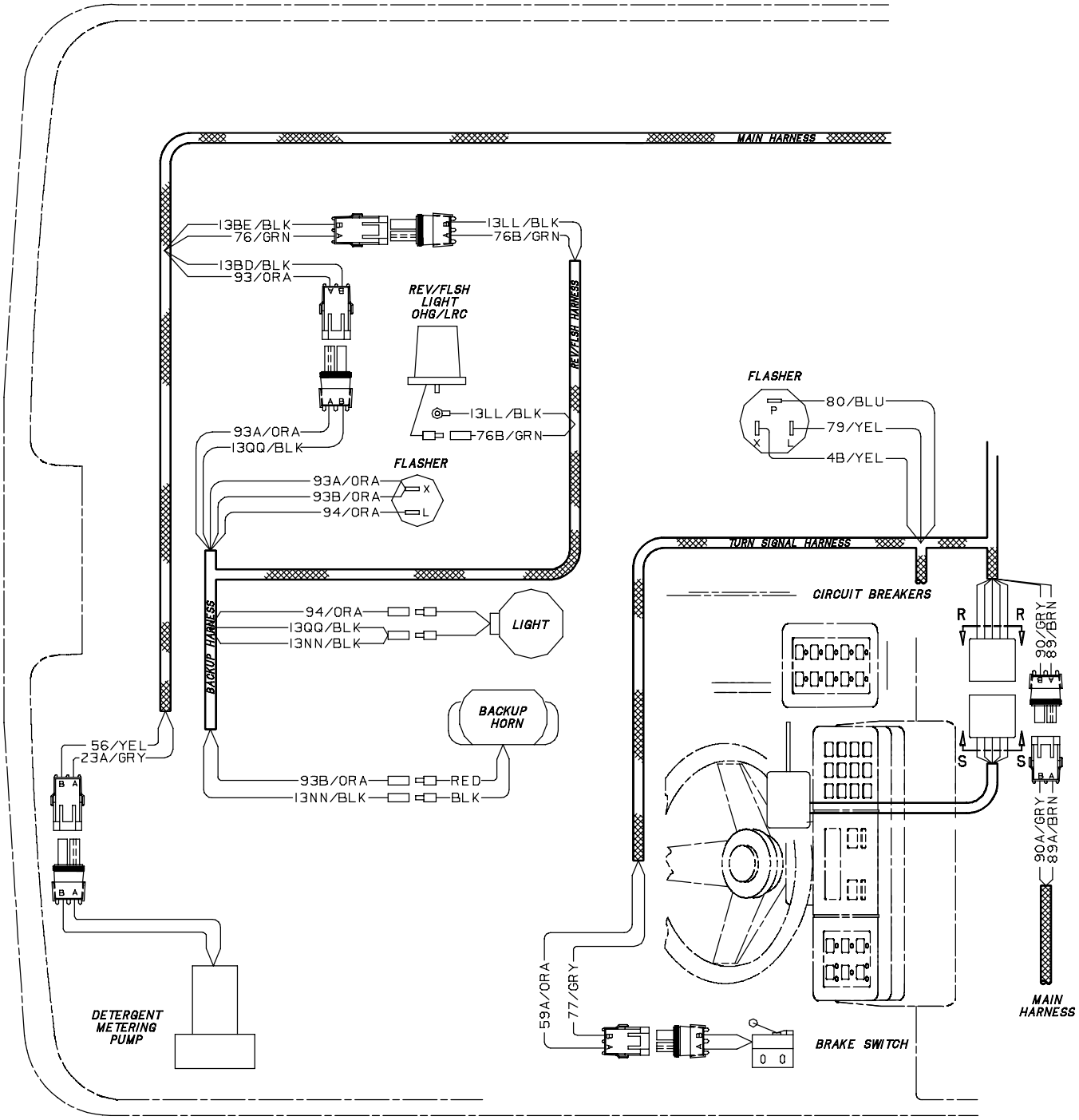

OPTIONS

Fig. 113 - Wire Harnesses Group (000000-013227)

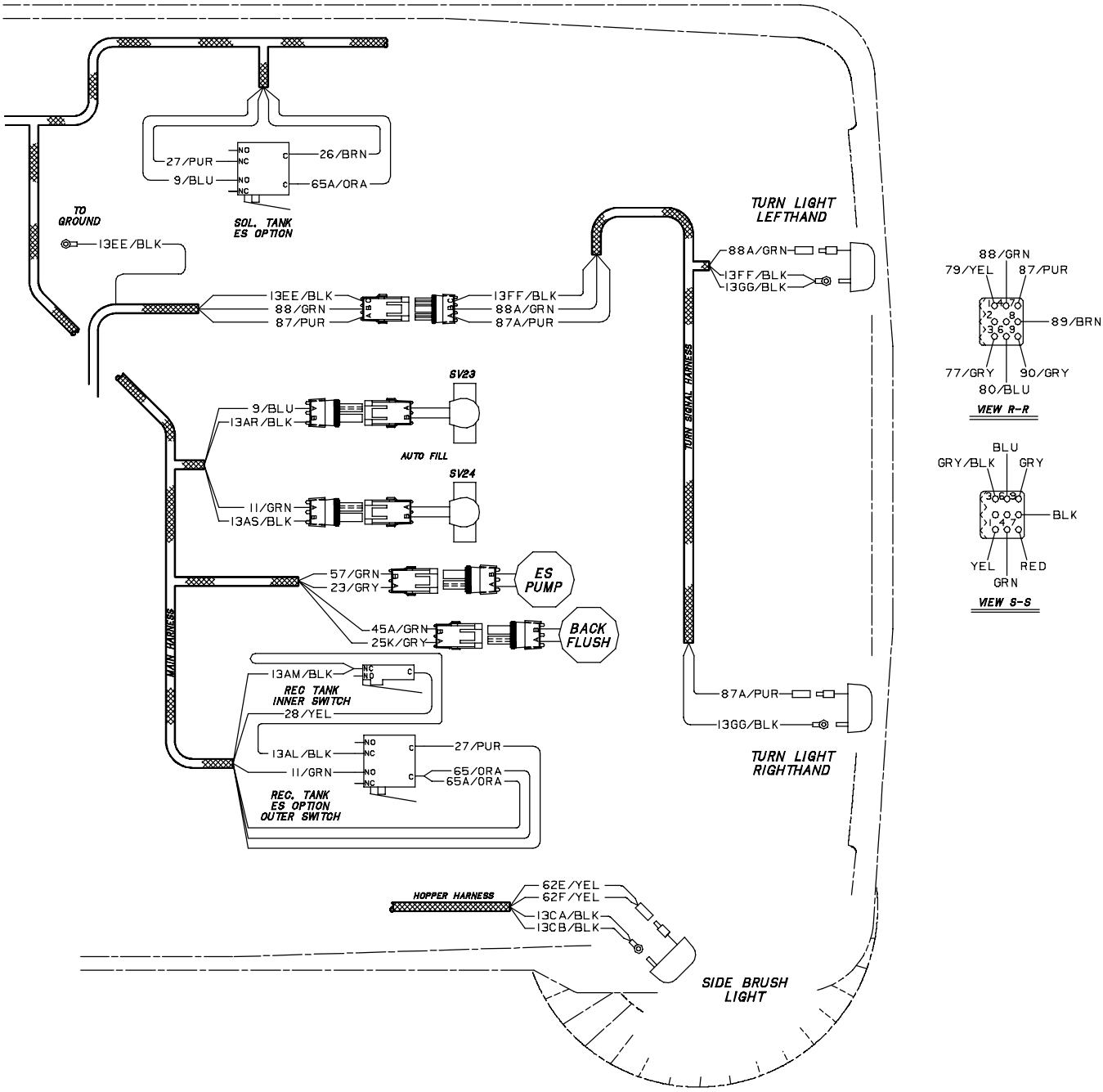

OPTIONS

Fig. 113 - Wire Harnesses Group (000000-013227)

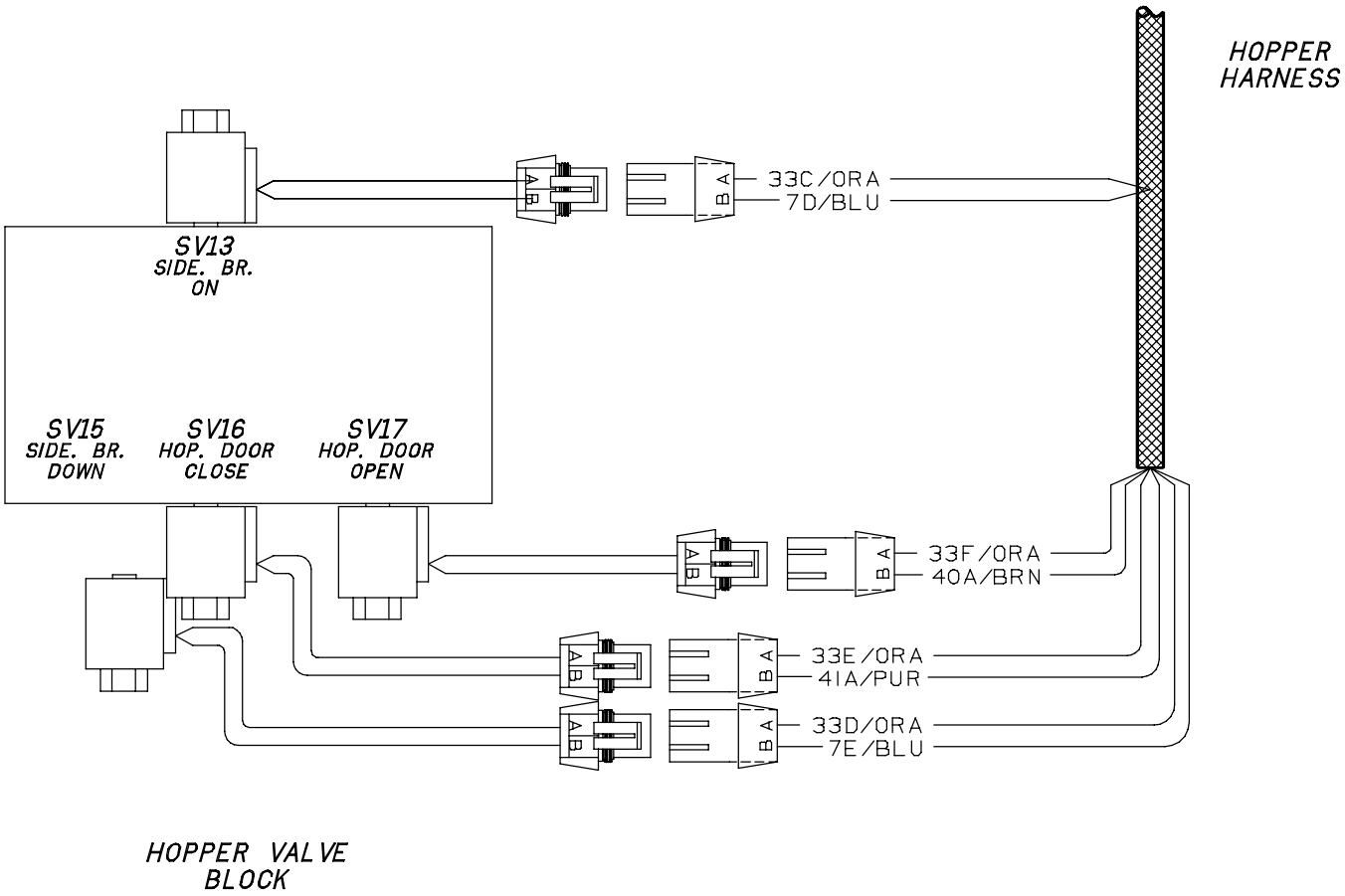

Fig. 113 - Wire Harnesses Group (000000-013227)

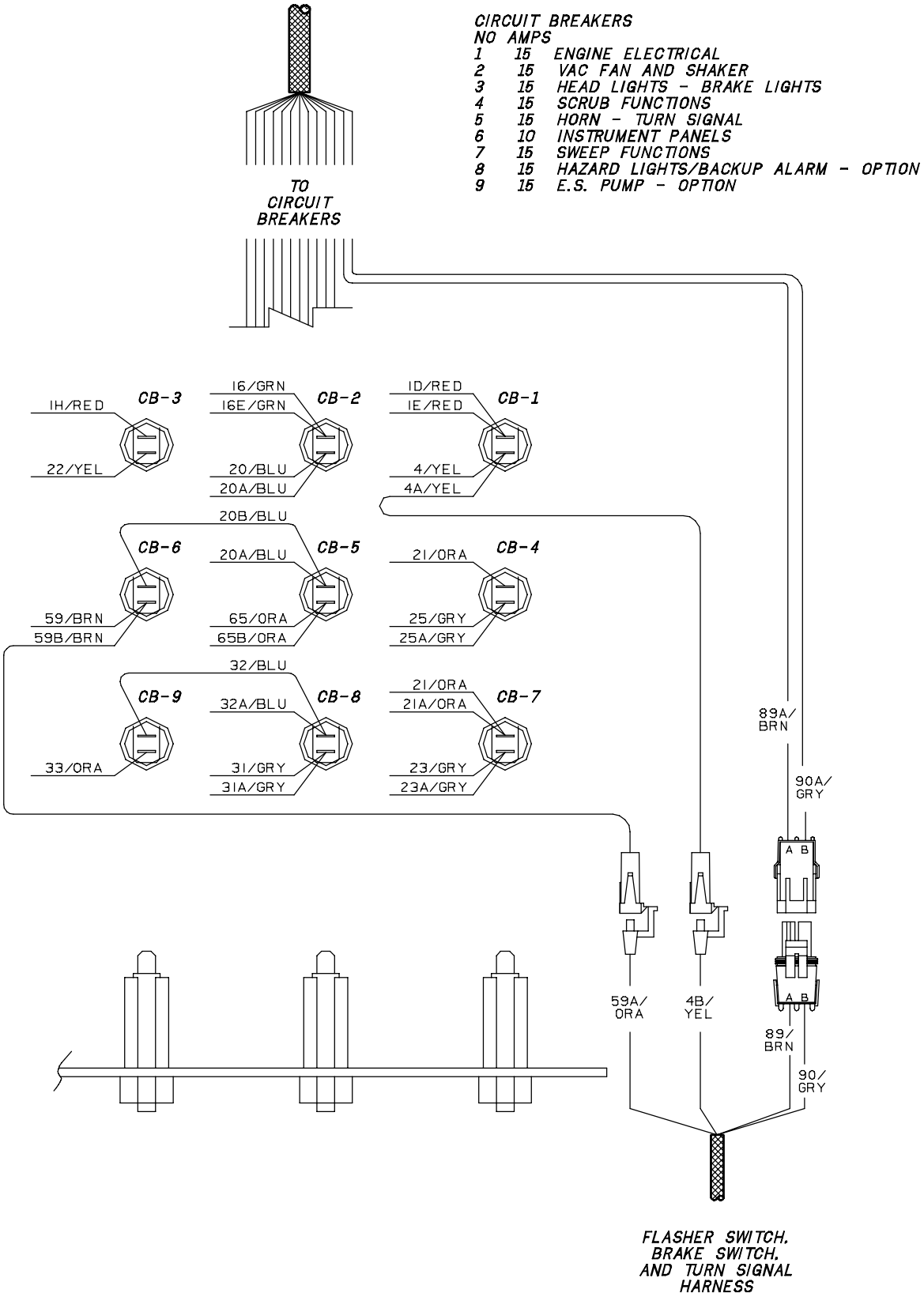

11077 - 8410, G, LP

Ref.	Tennant Part No.	Machine Serial Number	Description	Qty.
1	83723	(000000-013227)	Harness, Main, 8410 Gas/Lpg	1
2	83721	(000000-013227)	Harness, Hopper 8410	1

Fig. 114 - Wire Harnesses Group (013228-013999)

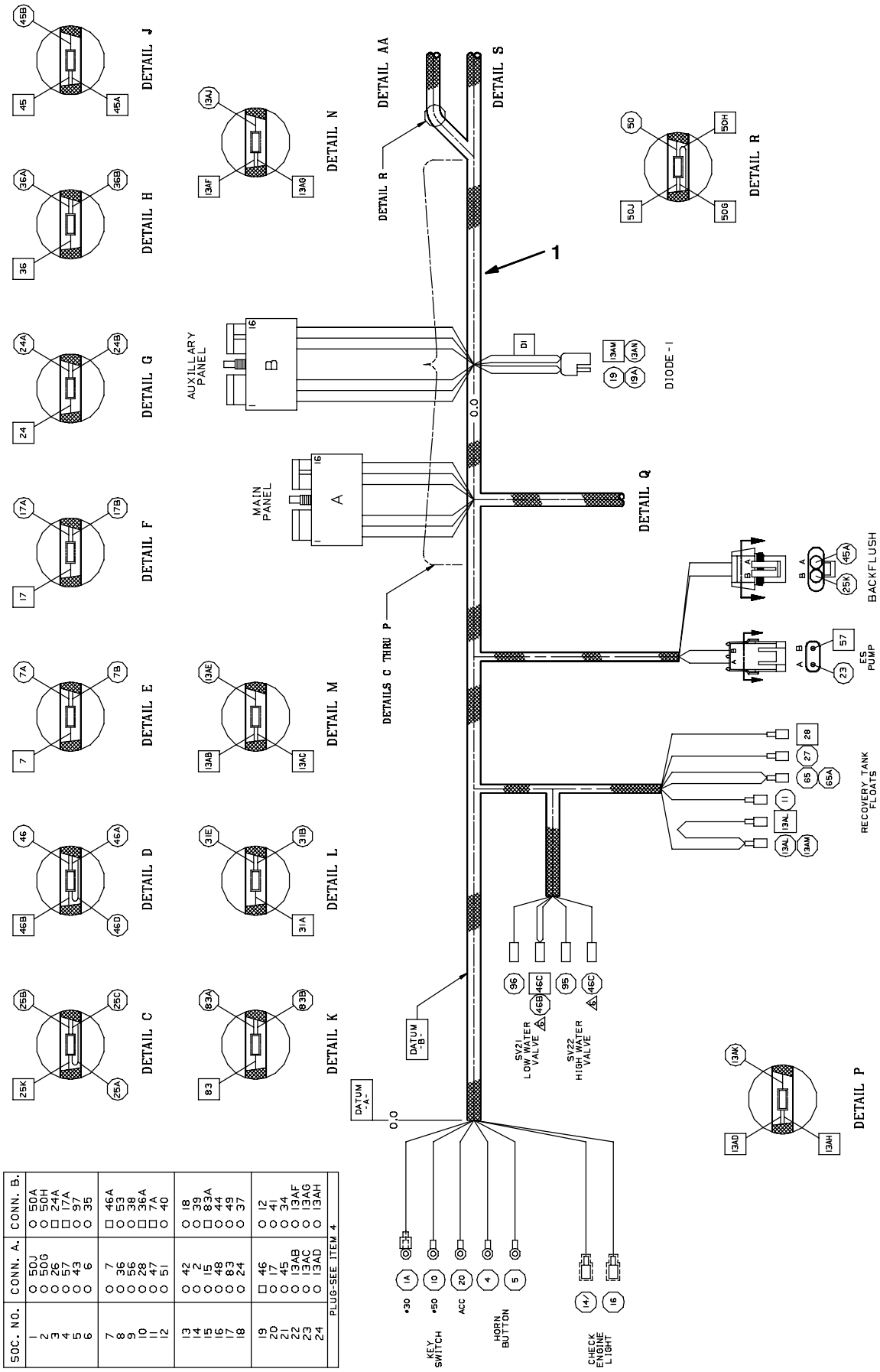

CONNECTOR WIRING

SOC. NO.	CONN. A.	CONN. B.
1	50J	50A
2	50G	50H
3	26	24A
4	57	17A
5	43	97
6	6	35
7	7	46A
8	36	53
9	56	38
10	28	36A
11	47	7A
12	51	40
13	42	18
14	2	39
15	15	83A
16	48	44
17	83	49
18	24	37
19	46	12
20	17	41
21	45	34
22	13AB	13AF
23	13AC	13AG
24	13AD	13AH
PLUG-SEE ITEM 4		

Fig. 114 - Wire Harnesses Group (013228-013999)

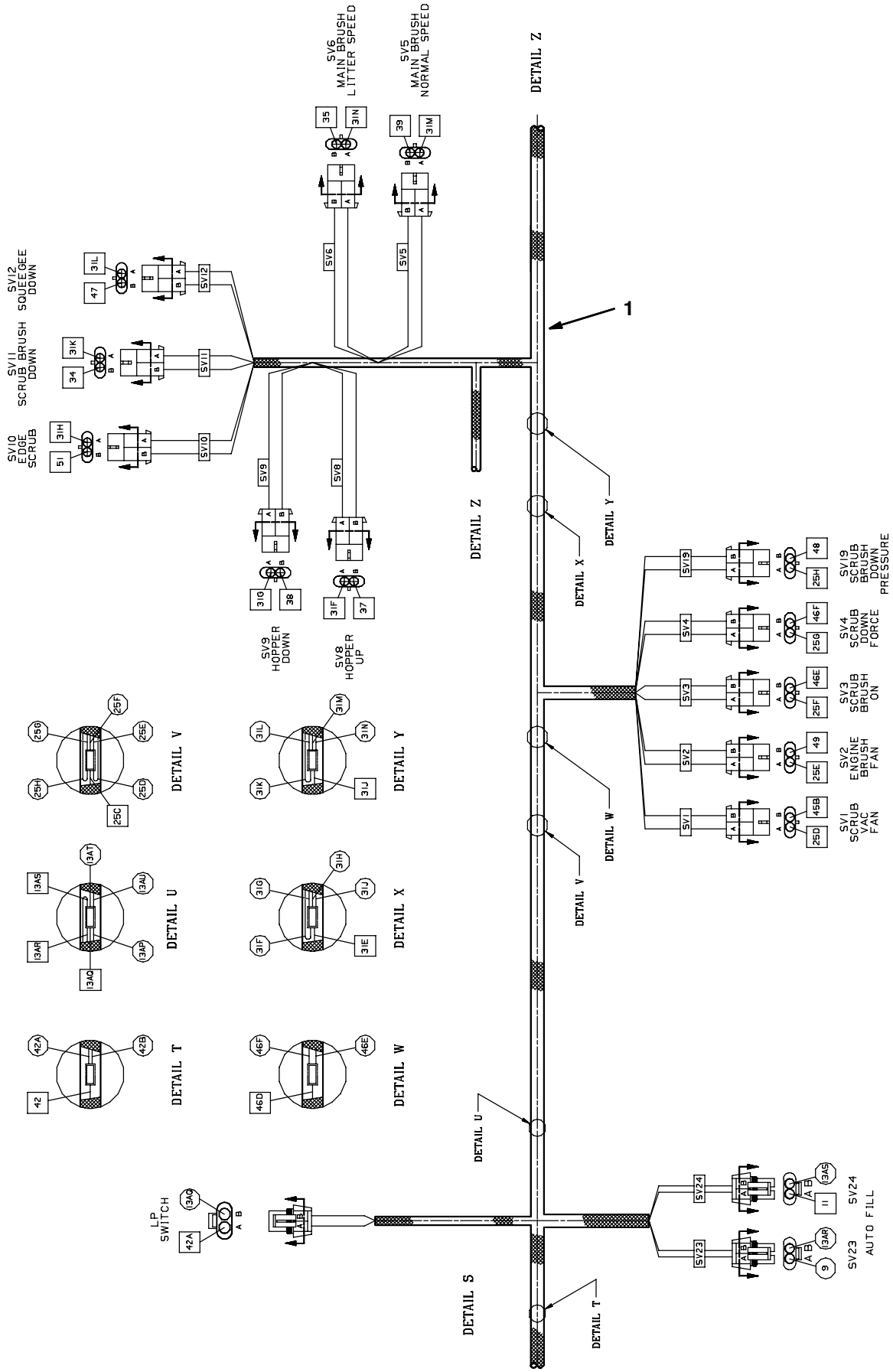

Fig. 114 - Wire Harnesses Group (013228-013999)

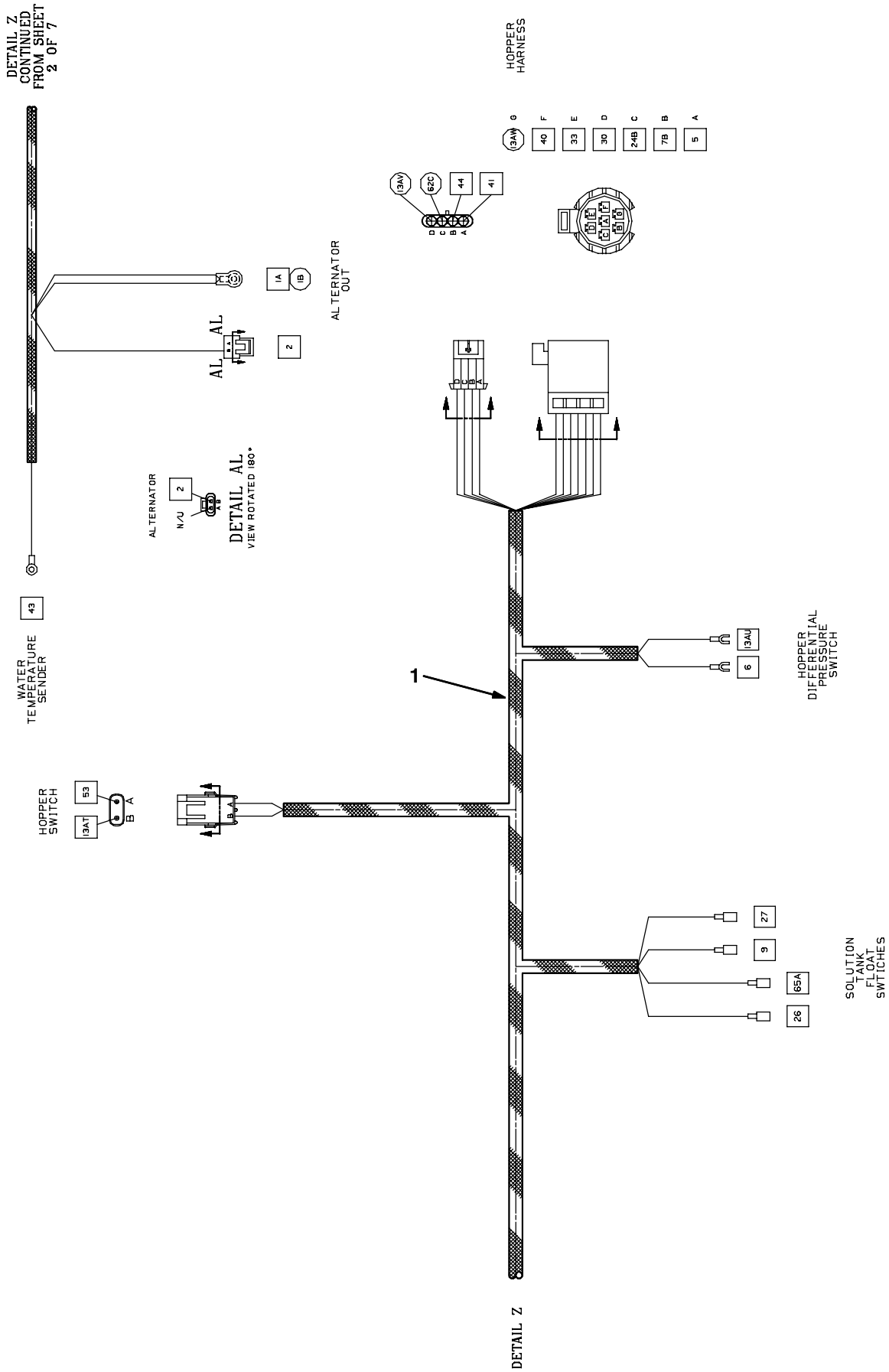

Fig. 114 - Wire Harnesses Group (013228-013999)

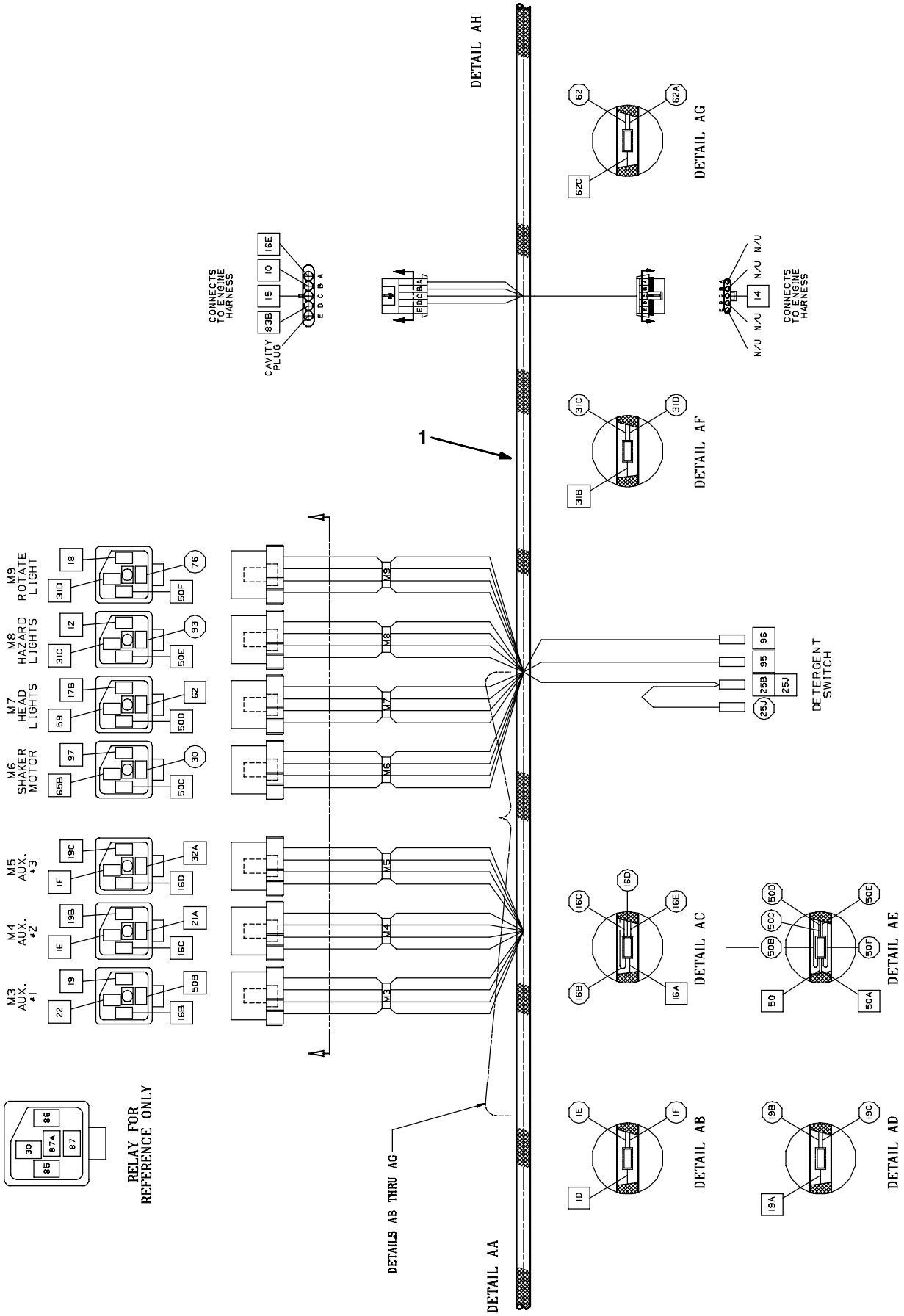

Fig. 114 - Wire Harnesses Group (013228-013999)

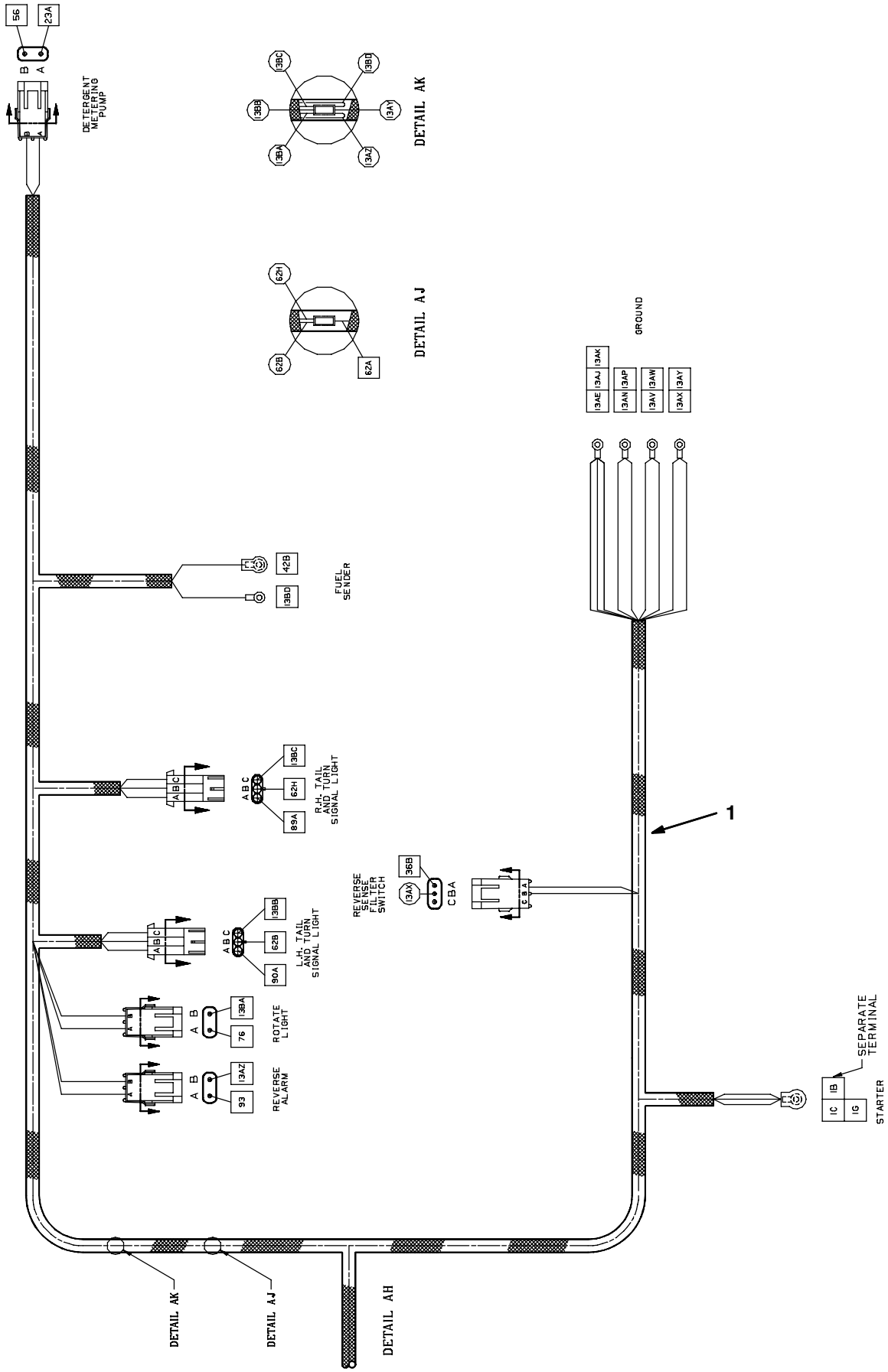

Fig. 114 - Wire Harnesses Group (013228-013999)

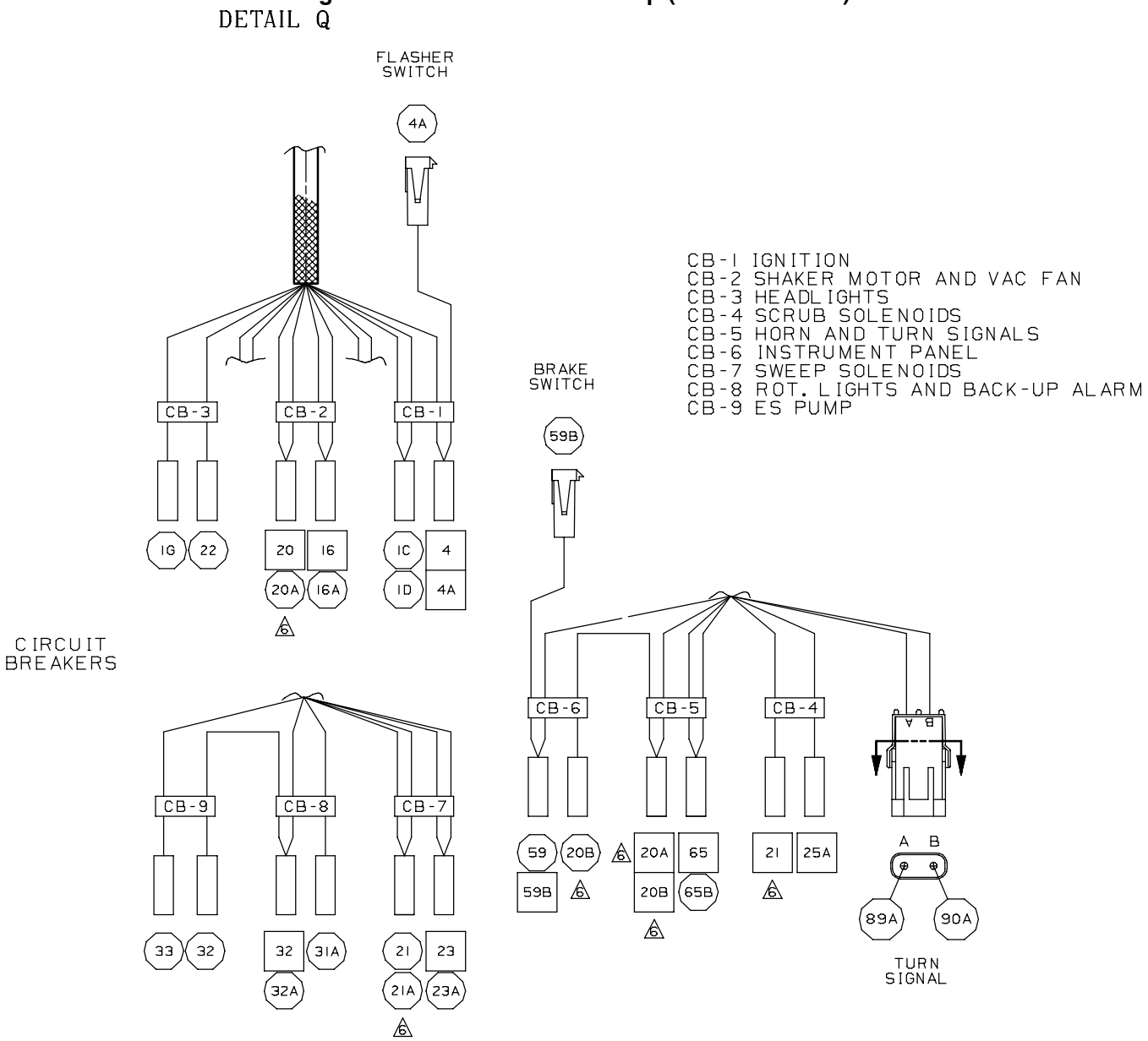

Fig. 114 - Wire Harnesses Group (013228-013999)

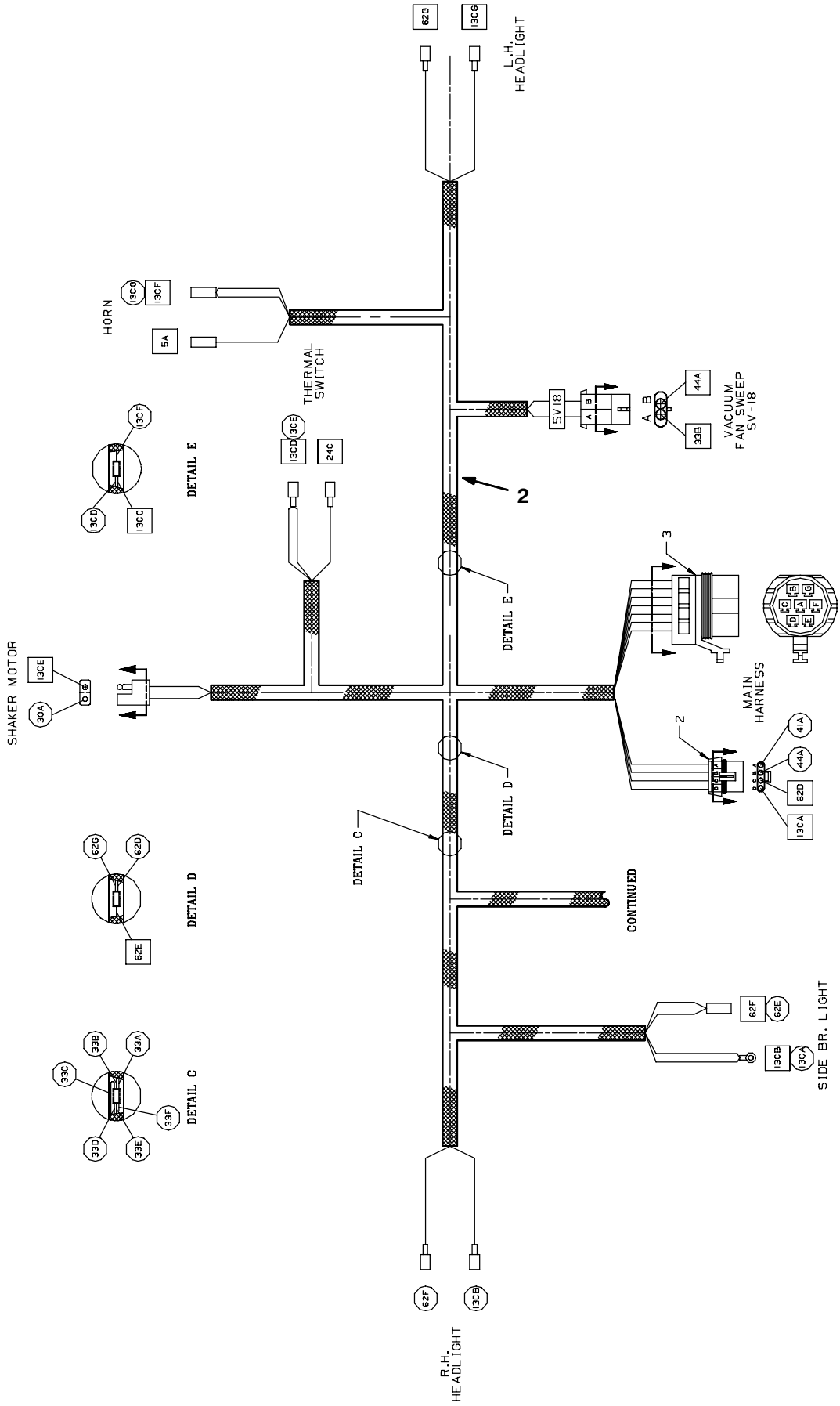

Fig. 114 - Wire Harnesses Group (013228-013999)

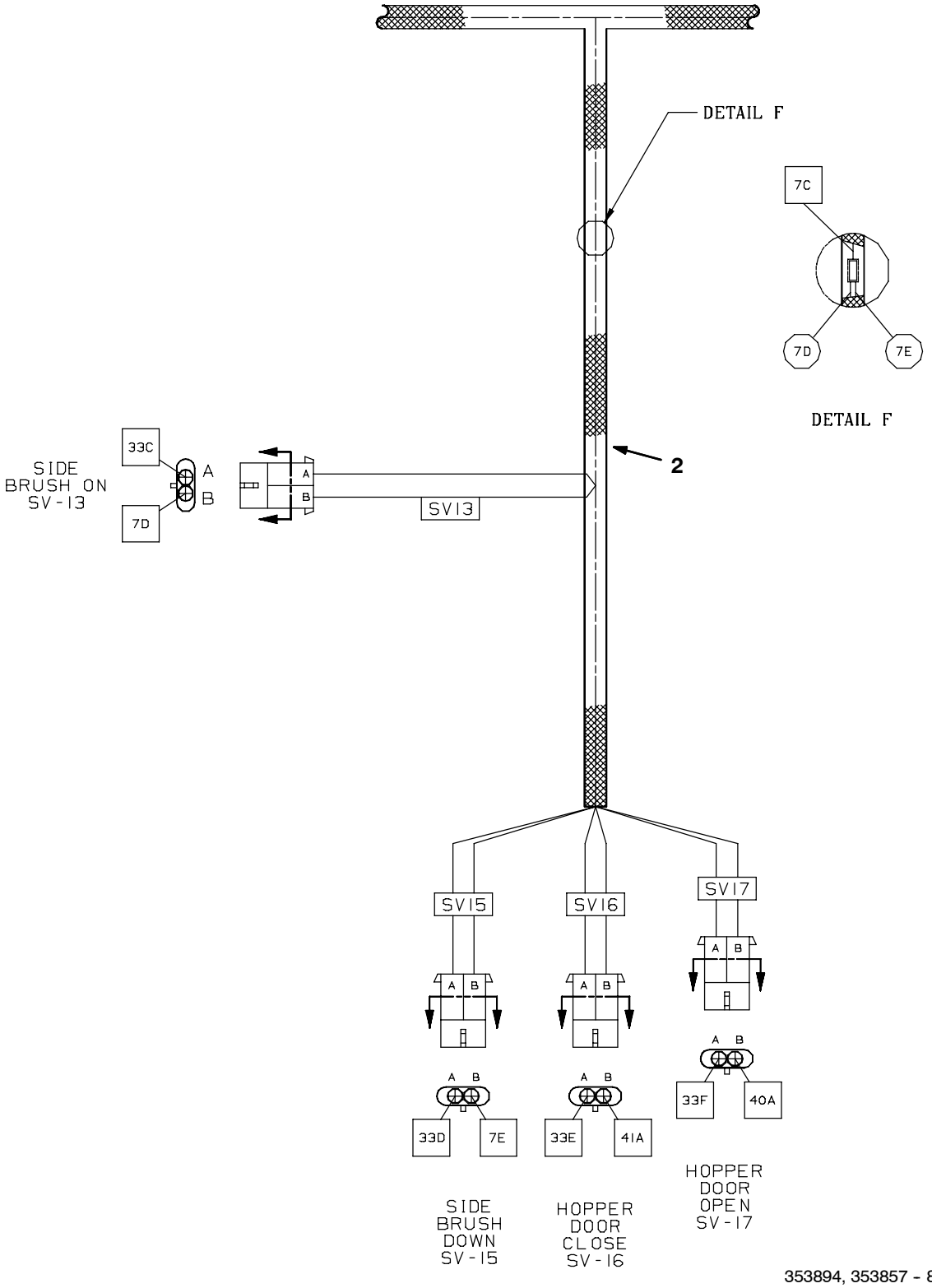

353894, 353857 - 8410, G, LP

Ref.	Tennant Part No.	Machine Serial Number	Description	Qty.
1	392562	(013228-013999)	Harness, Main, 8410 Gas/Lpg	1
2	83721	(013228-013999)	Harness, Hopper 8410	1
	371921	(013228-013999)	Harness, Engine, Gas/Lpg Gm 3.0L	1

Fig. 115 - Wire Harnesses Group (014000-)

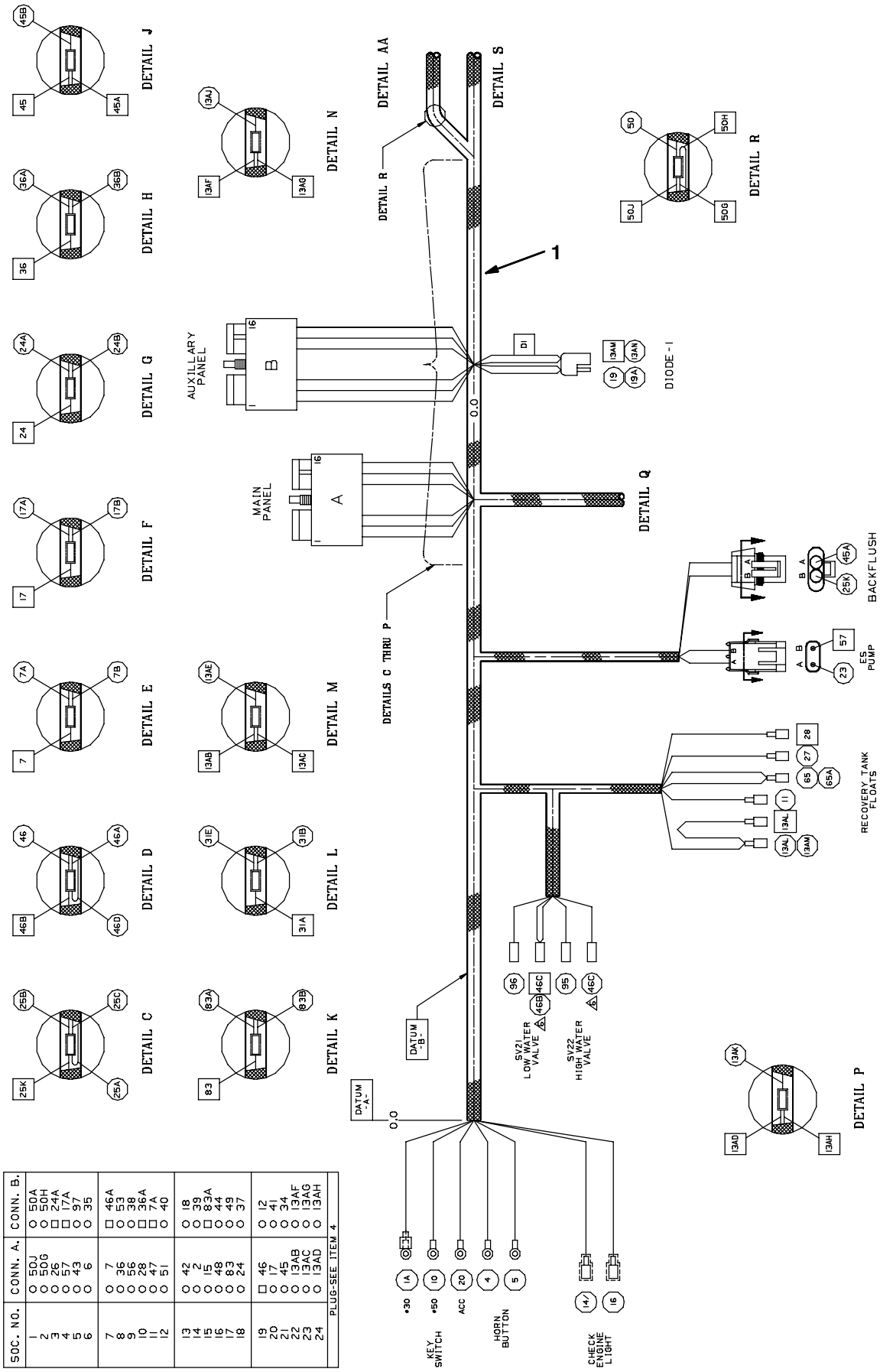

CONNECTOR WIRING

SOC. NO.	CONN. A.	CONN. B.
1	50J	50A
2	50G	50H
3	26	24A
4	57	17A
5	43	97
6	6	35
7	7	46A
8	36	53
9	56	38
10	28	36A
11	47	7A
12	51	40
13	42	18
14	2	39
15	15	83A
16	48	44
17	83	49
18	24	37
19	46	12
20	17	41
21	45	34
22	13AB	13AF
23	13AC	13AG
24	13AD	13AH
PLUG-SEE ITEM 4		

Fig. 115 - Wire Harnesses Group (014000-)

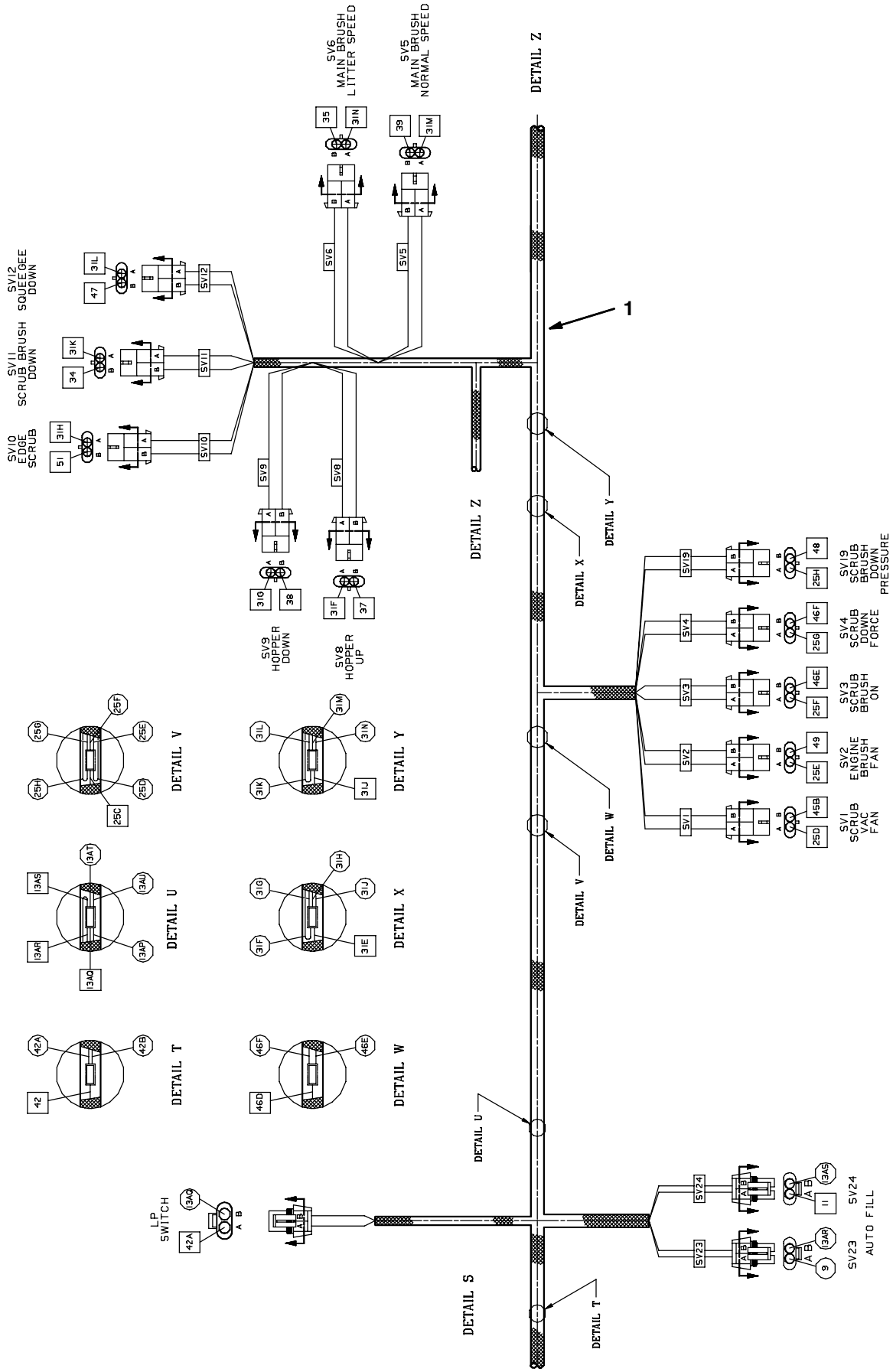

Fig. 115 - Wire Harnesses Group (014000-)

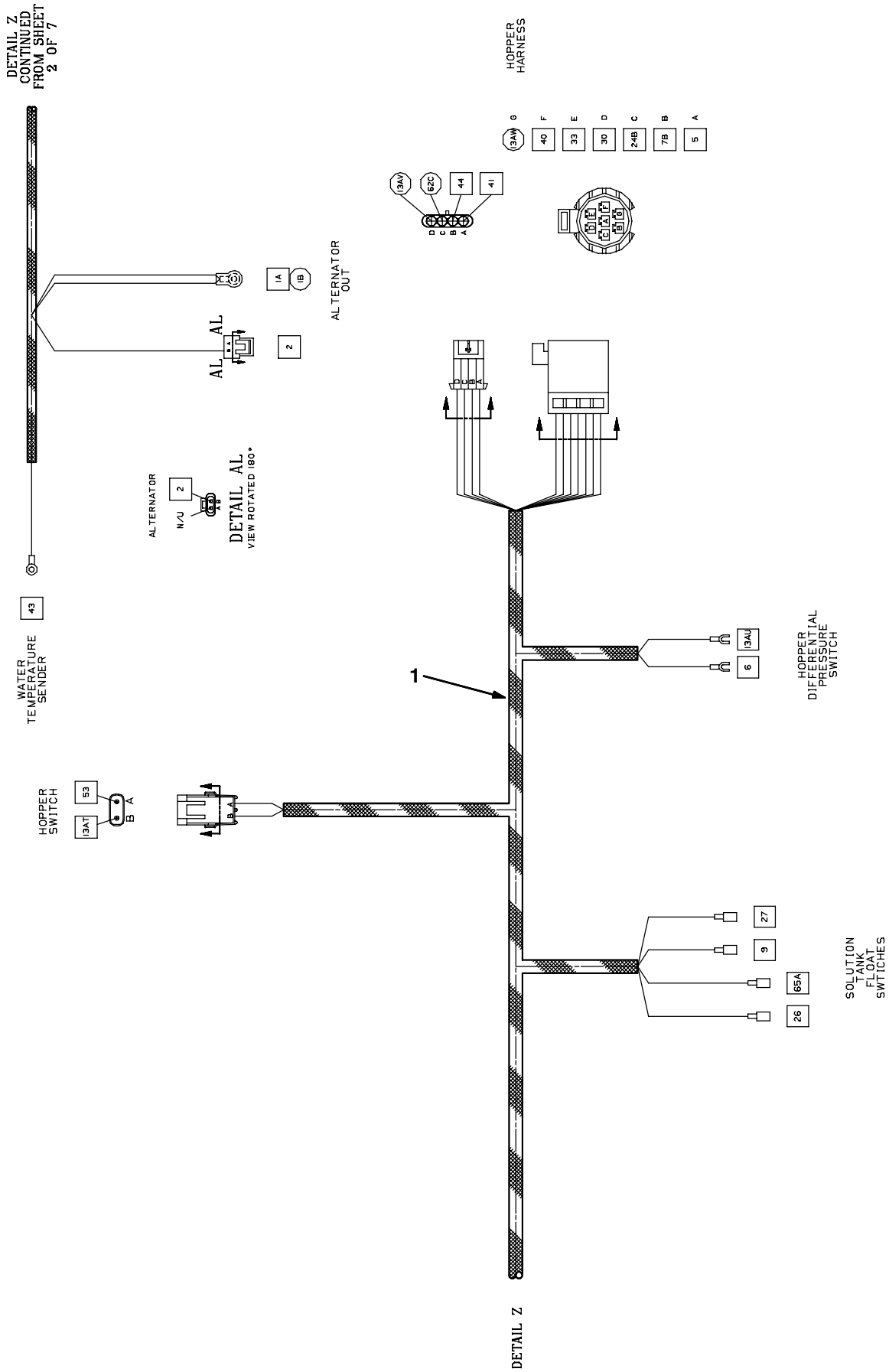

Fig. 115 - Wire Harnesses Group (014000-)

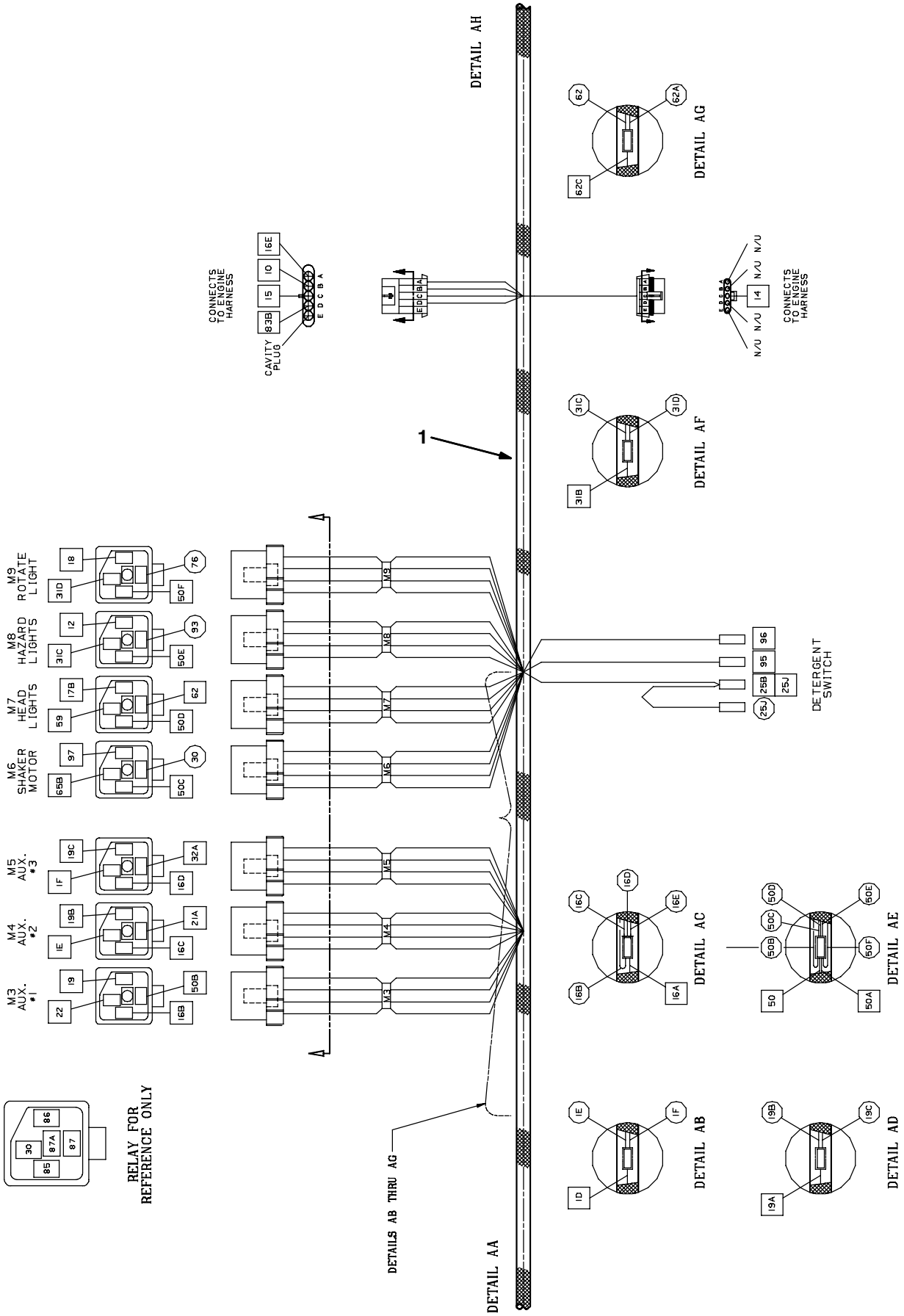

Fig. 115 - Wire Harnesses Group (014000-)

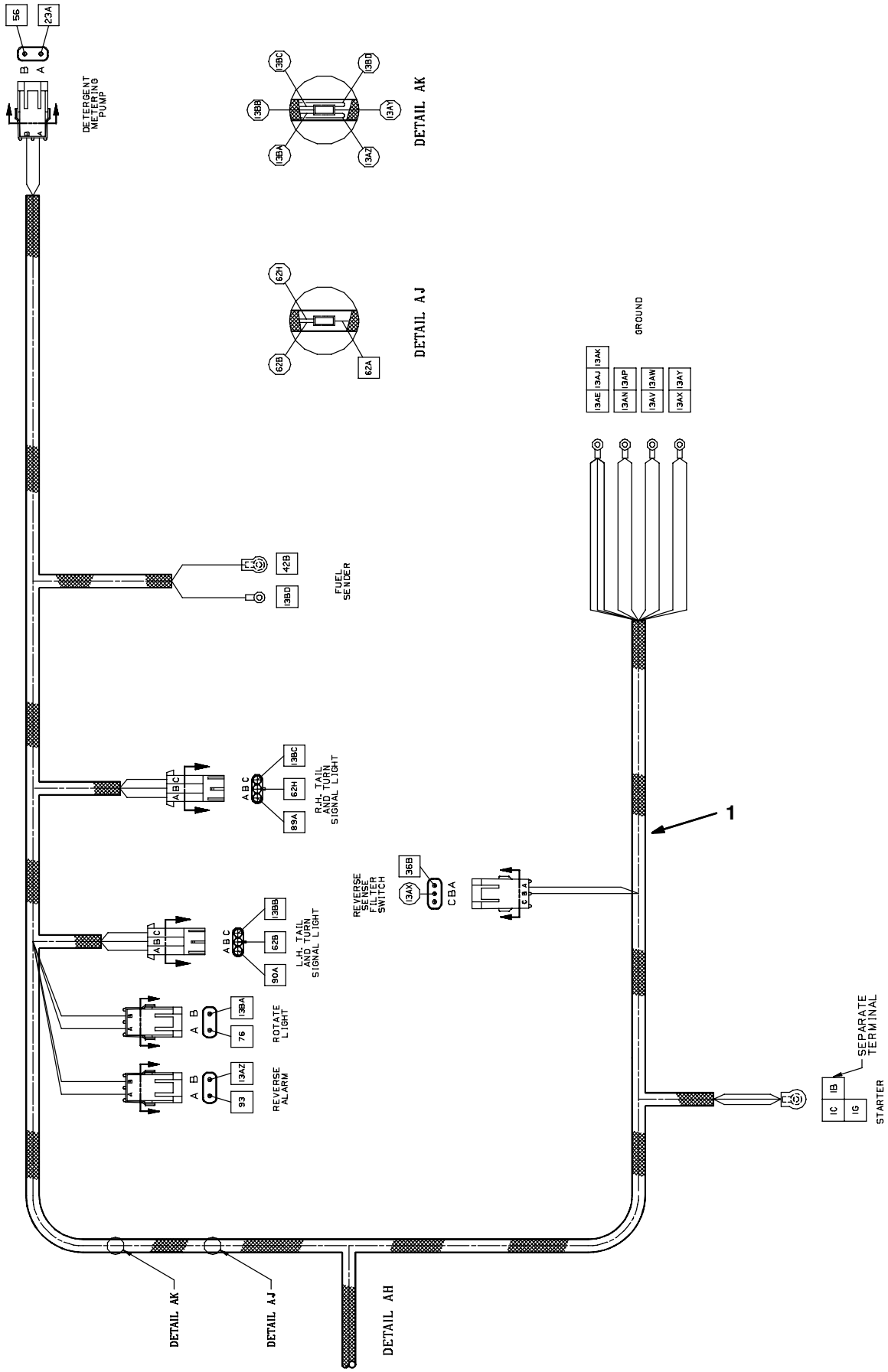

Fig. 115 - Wire Harnesses Group (014000-)

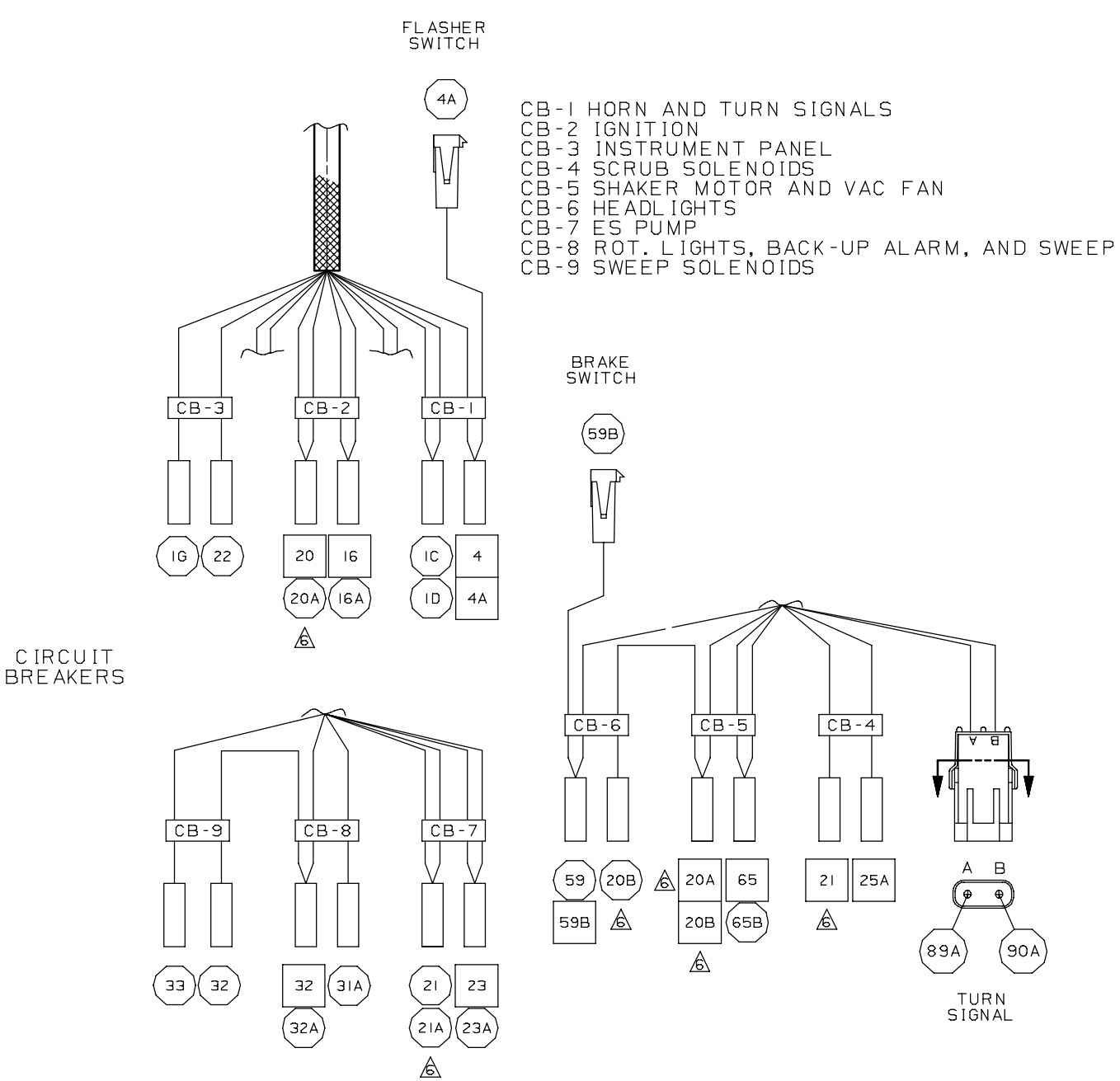

Fig. 115 - Wire Harnesses Group (014000-)

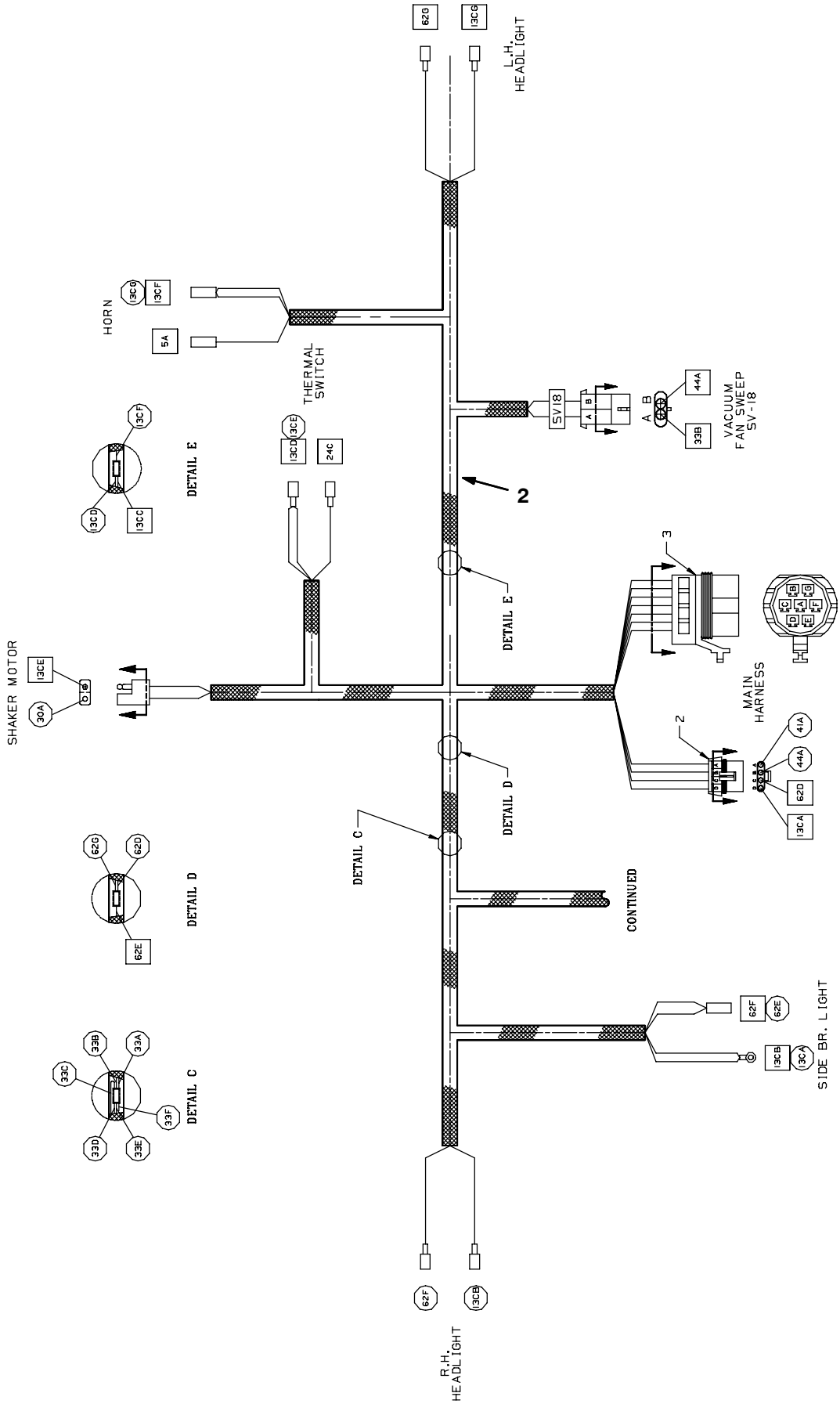

Fig. 115 - Wire Harnesses Group (014000-)

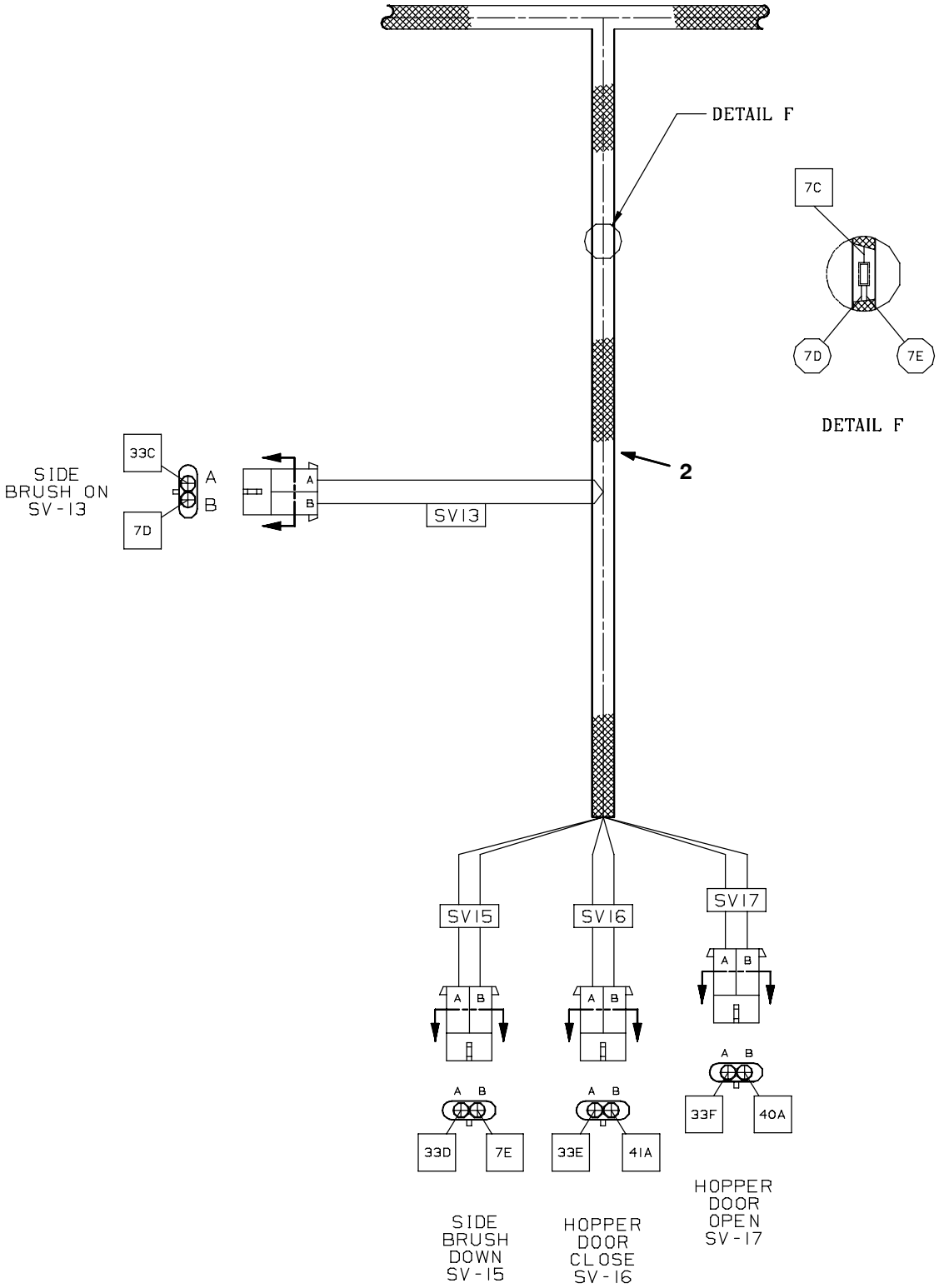

Fig. 115 - Wire Harnesses Group Gas/LPG Engine (014000-014999)

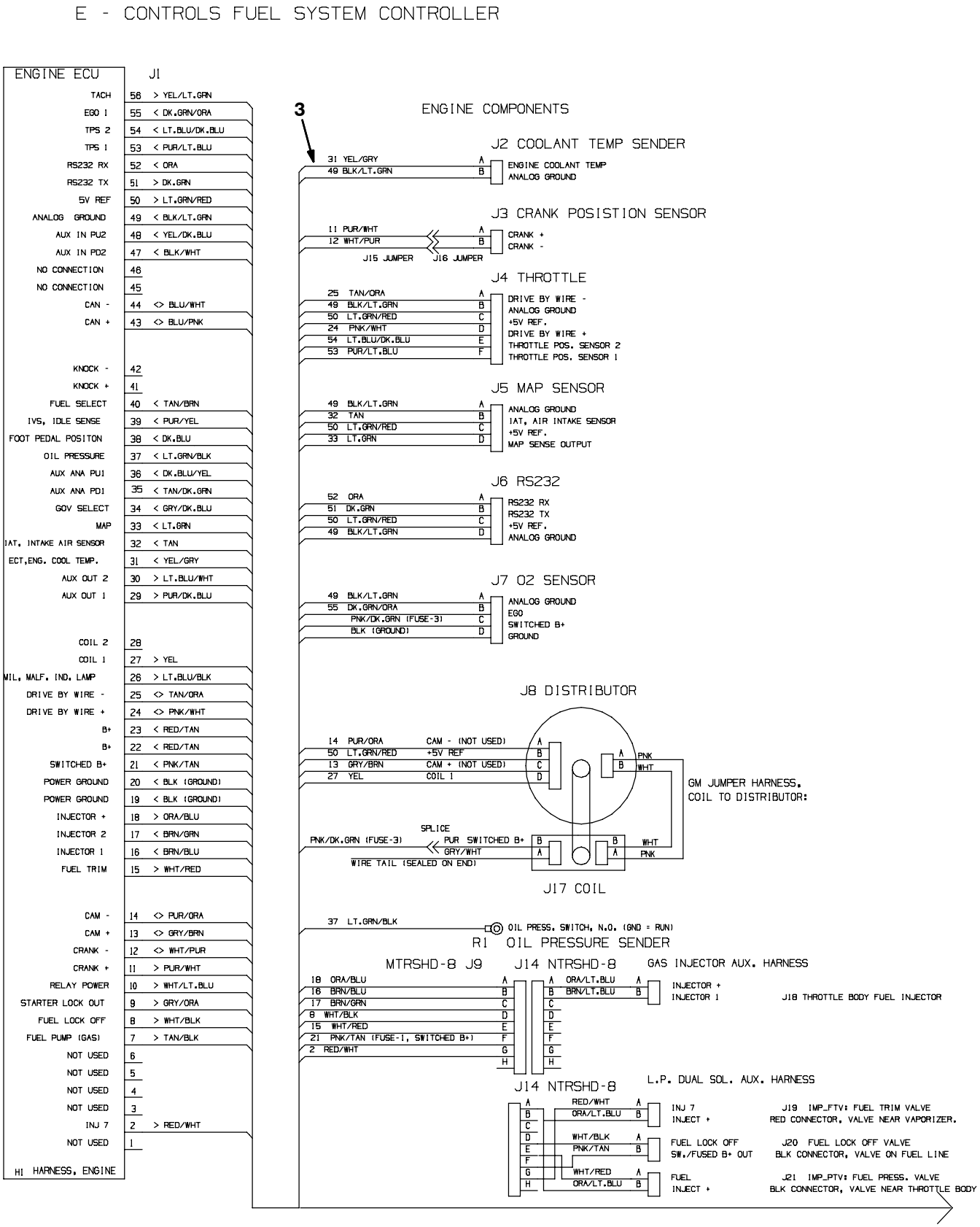

Fig. 115 - Wire Harnesses Group Gas/LPG Engine (014000-014999)

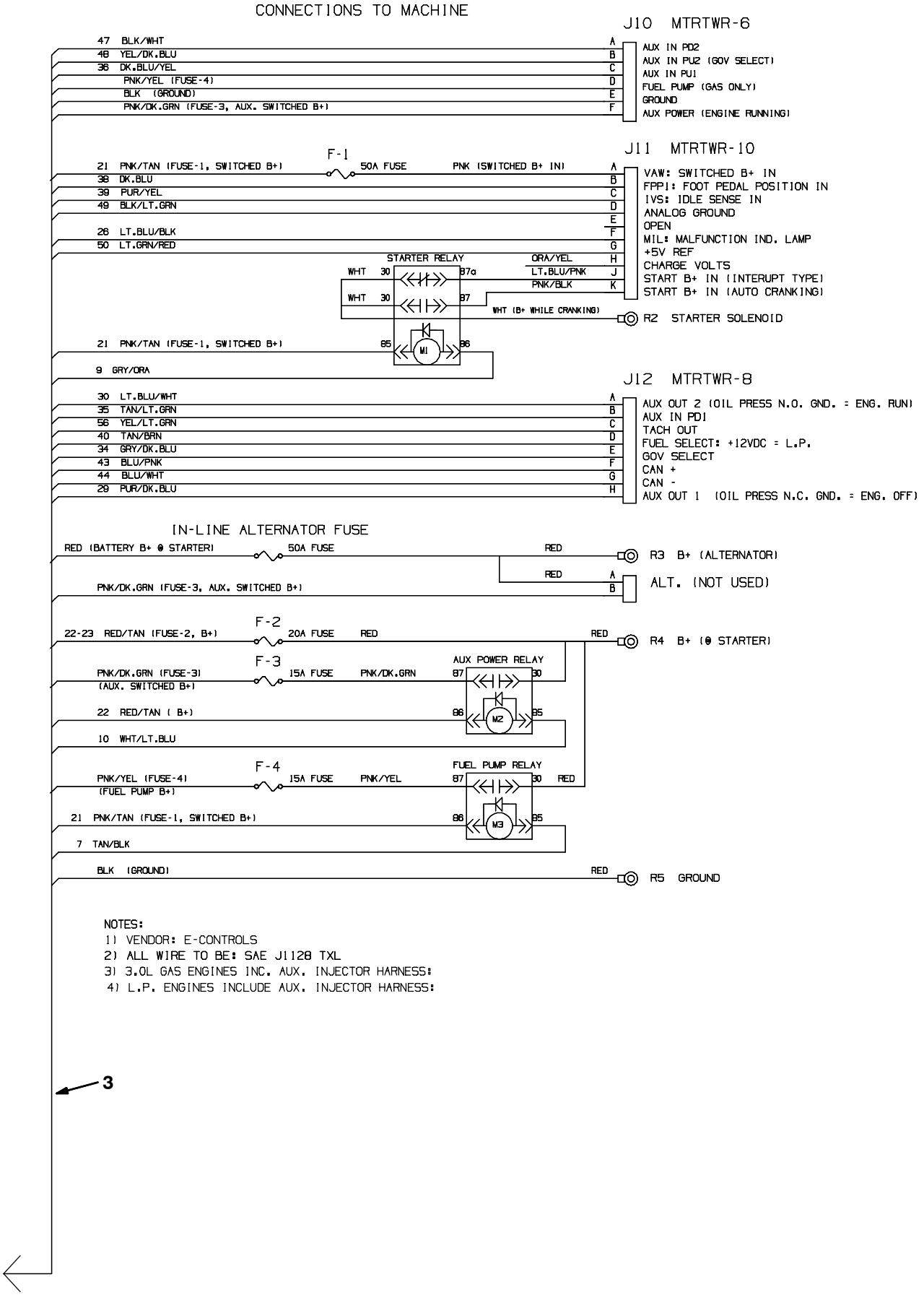

Fig. 115 - Wire Harnesses Group Gas/LPG Engine (014000-014999)

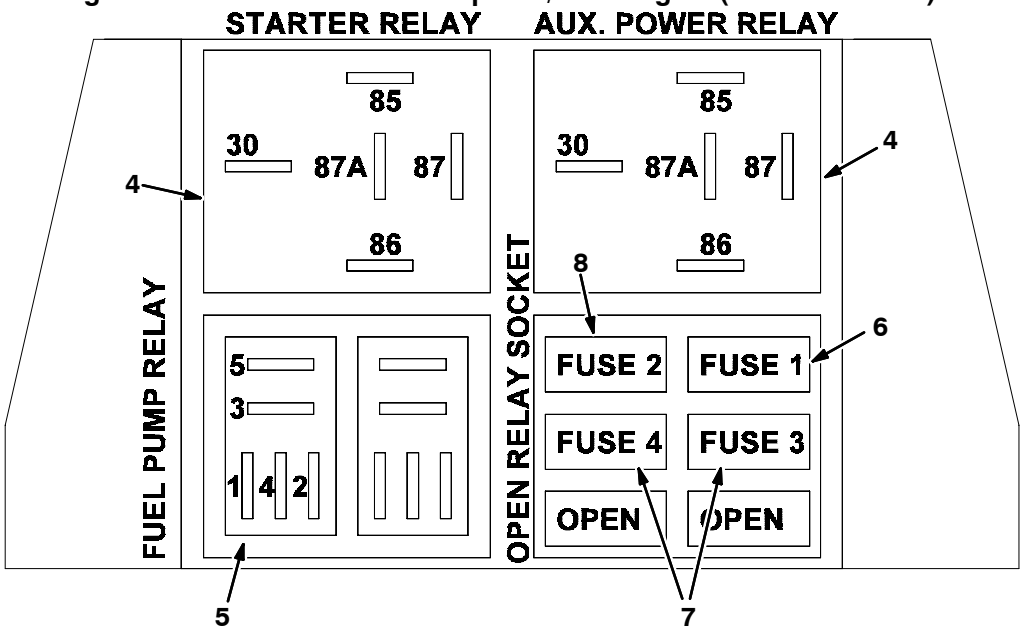

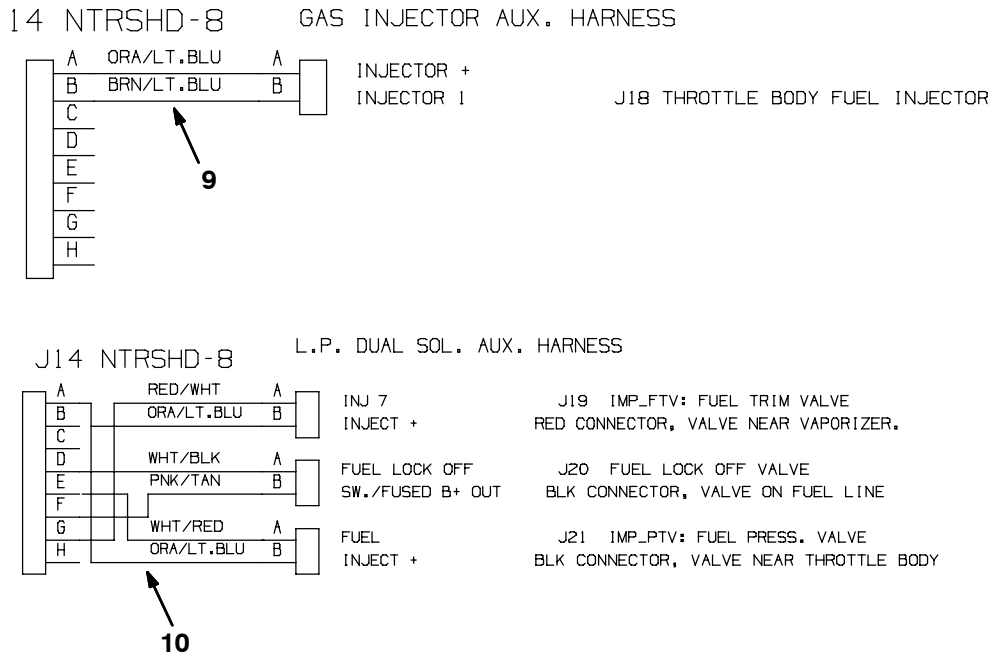

Fig. 115 - Wire Harnesses Group Gas/LPG, Adaptor (014000-014999)

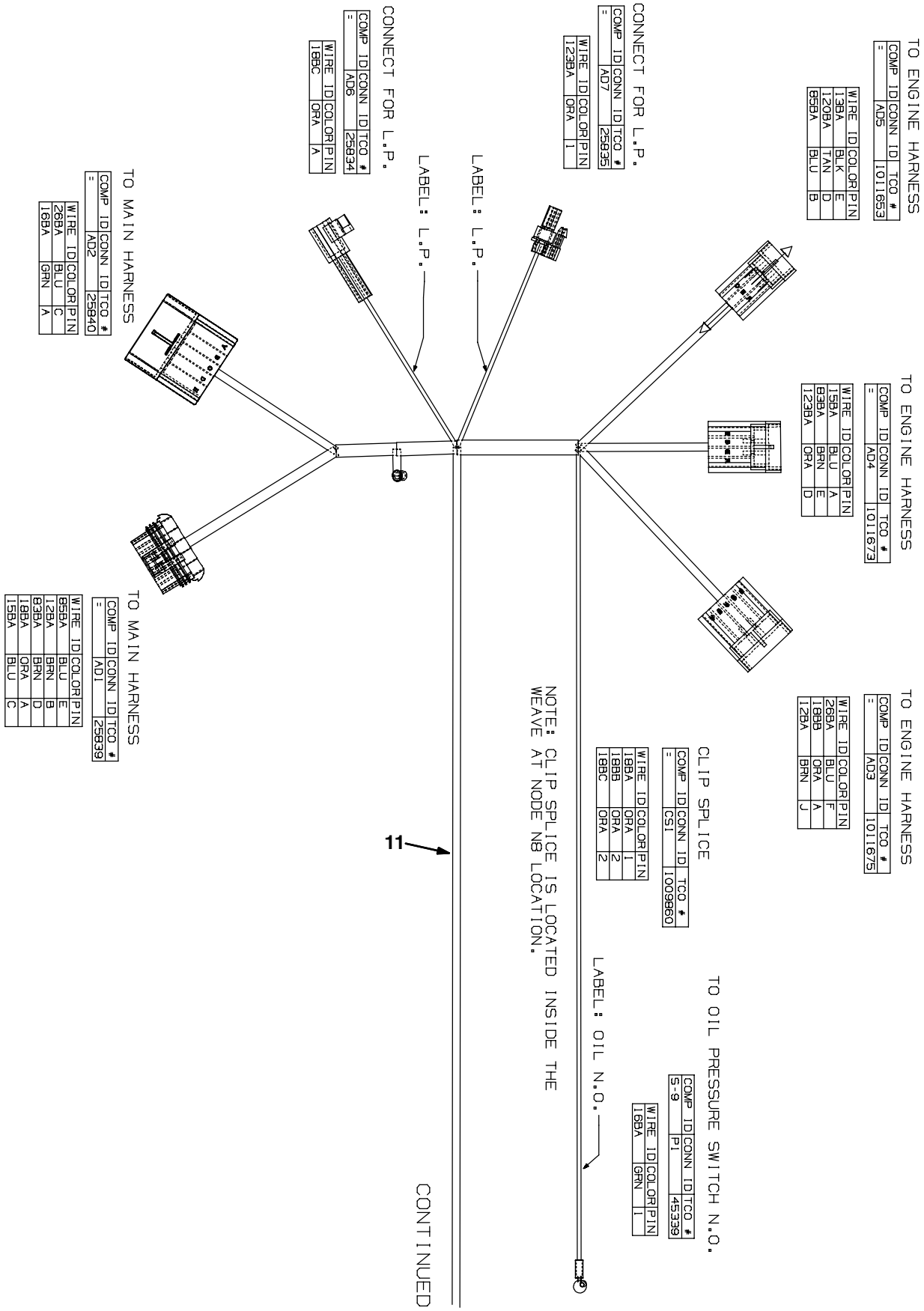

Fig. 115 - Wire Harnesses Group Gas/LPG, Adaptor (014000-014999)

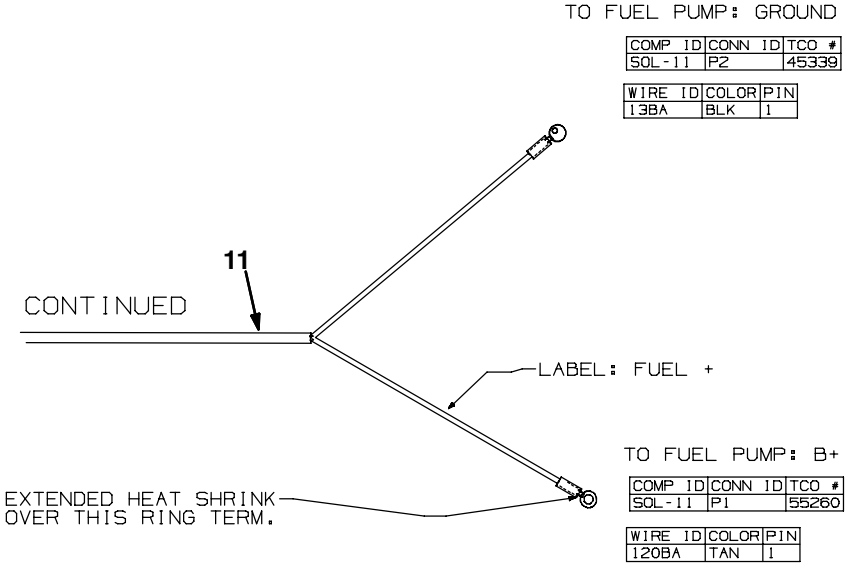

353894, 353857 - 8410, G, LP

	Ref.	Tennant Part No.	Machine Serial Number	Description	Qty.
	1	392562	(014000-)	Harness, Main, 8410 Gas/Lpg	1
	2	83721	(014000-)	Harness, Hopper 8410	1
▽	3	1011011	(014000-014999)	Harness, Eng [3.0l, Gm, E-cntrl]	1
▲	4	57804	(014000-014999)	Relay, 12vdc, 40a, Spdt	2
▲	5	394916	(014000-014999)	Relay, 12vdc, 20a, Spdt	1
▲	6	372235	(014000-014999)	Fuse, 5 Amp, [Min-5]	1
▲	7	372236	(014000-014999)	Fuse, 15 Amp, [Min-15]	2
▲	8	372237	(014000-014999)	Fuse, 20 Amp, [Min-20]	1
	9	1011017	(014000-014999)	Harness, Injector, Gas[3.0l Gm,E-Cntrl]	1
	10	1011015	(014000-014999)	Harness, Lpg Injector [3.0l, Gm,E-Cont]	1
	11	1012033	(014000-014999)	Harness, Adaptor [800/8410]	1

Fig. 116 - Wire Harnesses Group, Gas/LPG Engine (015000-)

Gasoline/LPG Engine Harness (015000-)

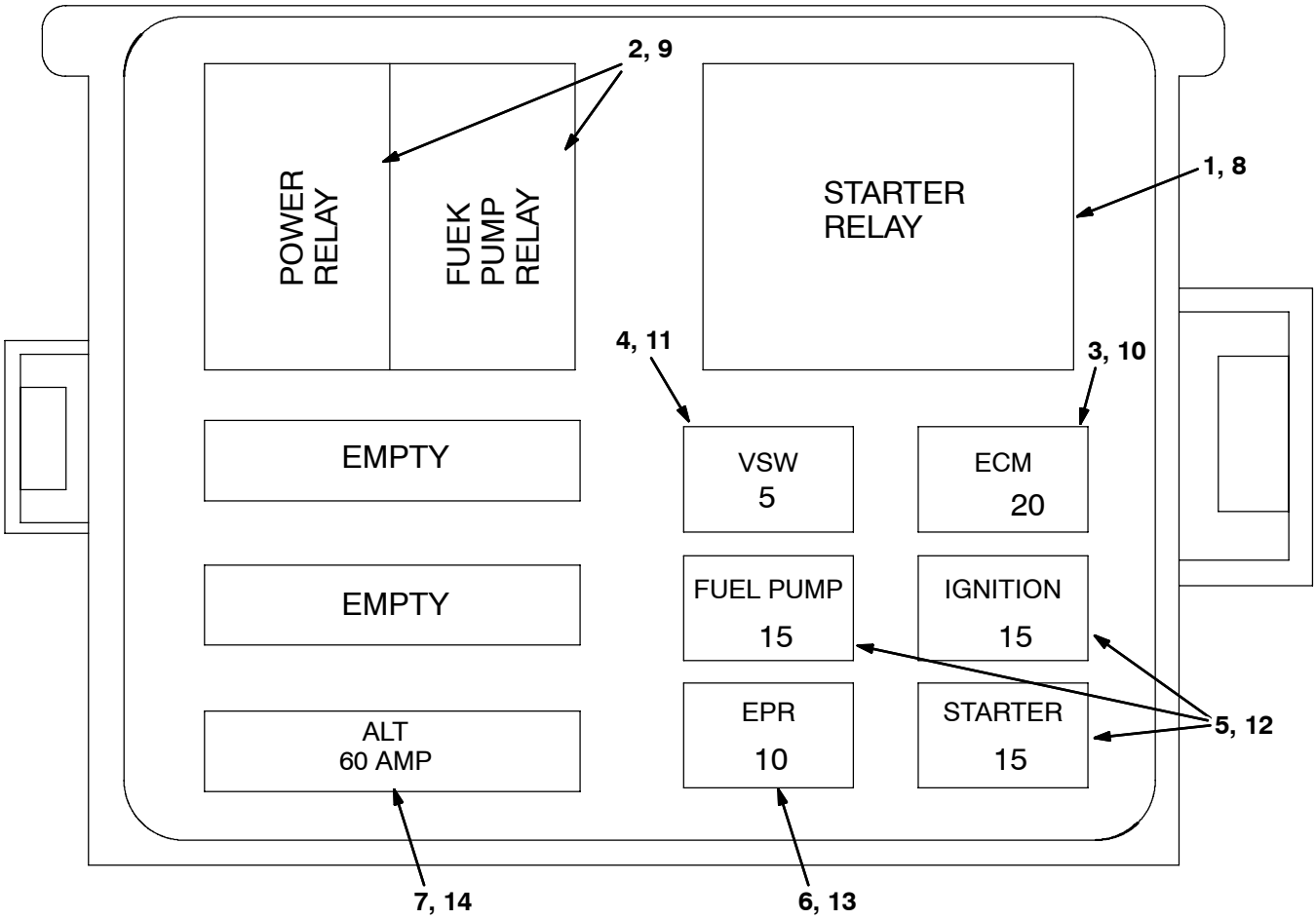

GM, G, LP

	Ref.	Part No.	Serial Number	Description	Qty.
▽		385010	(015000-)	Harness, Eng, Gas [3.0l 2007]	1
▲	1	394916	(015000-)	Relay, 12vdc, 20a, Spdt	1
▲	2	57804	(015000-)	Relay, 12vdc, 40a, Spdt	2
▲	3	372237	(015000-)	Fuse, 20 Amp, [Min-20]	1
▲	4	372235	(015000-)	Fuse, 5 Amp, [Min-5]	1
▲	5	372236	(015000-)	Fuse, 15 Amp, [Min-15]	2
▲	6	384999	(015000-)	Fuse, 10 Amp	1
▲	7	384998	(015000-)	Fuse, 60 Amp	1
▽		385018	(015000-)	Harness, Eng, Lpg [3.0l 2007]	1
▲	8	394916	(015000-)	Relay, 12vdc, 20a, Spdt	1
▲	9	57804	(015000-)	Relay, 12vdc, 40a, Spdt	2
▲	10	372237	(015000-)	Fuse, 20 Amp, [Min-20]	1
▲	11	372235	(015000-)	Fuse, 5 Amp, [Min-5]	1
▲	12	372236	(015000-)	Fuse, 15 Amp, [Min-15]	2
▲	13	384999	(015000-)	Fuse, 10 Amp	1
▲	14	384998	(015000-)	Fuse, 60 Amp	1

Fig. 117 - Wire Harnesses Schematic, Gas Engine (015000-)

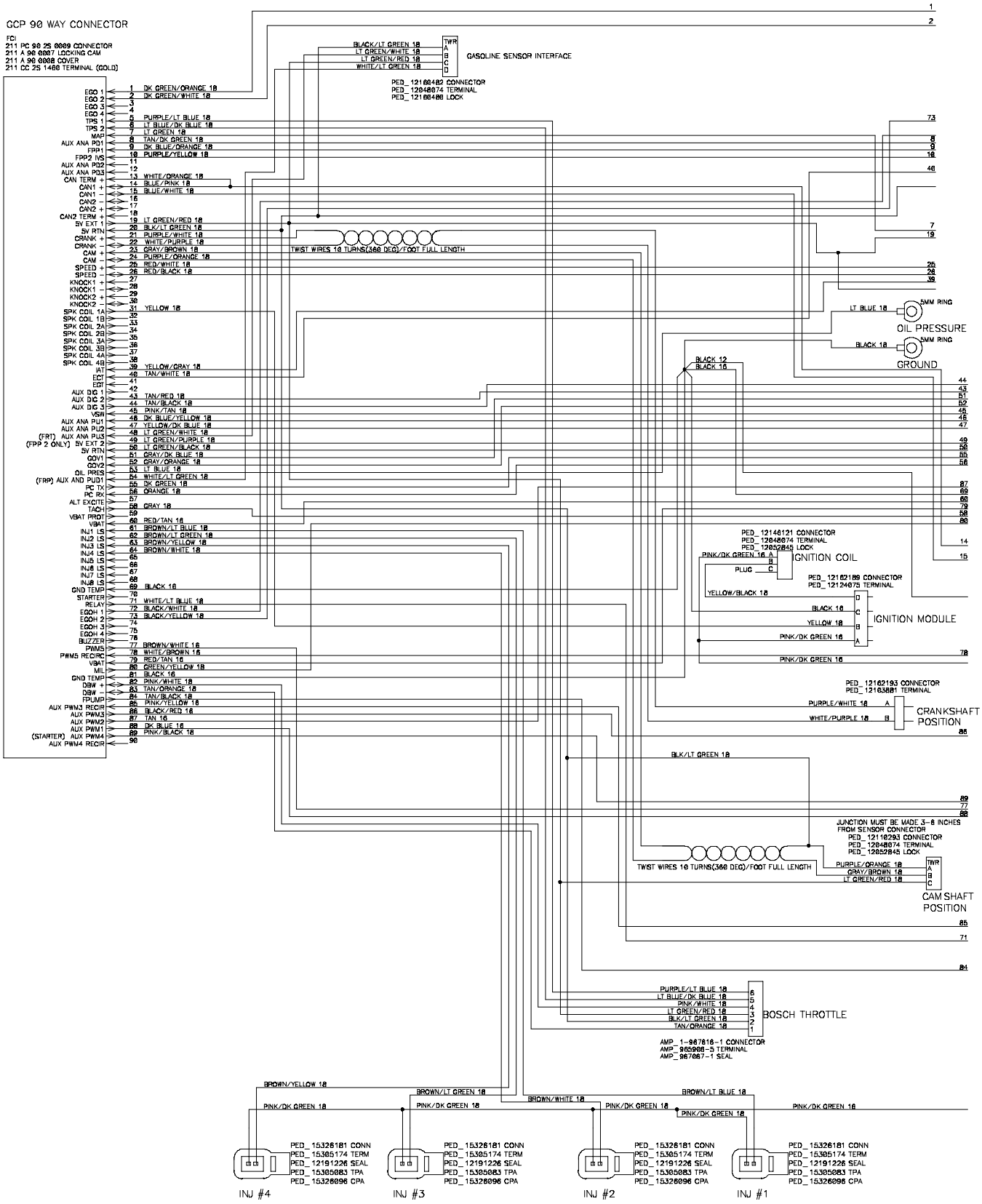

Fig. 117 - Wire Harnesses Schematic, Gas Engine (015000-)

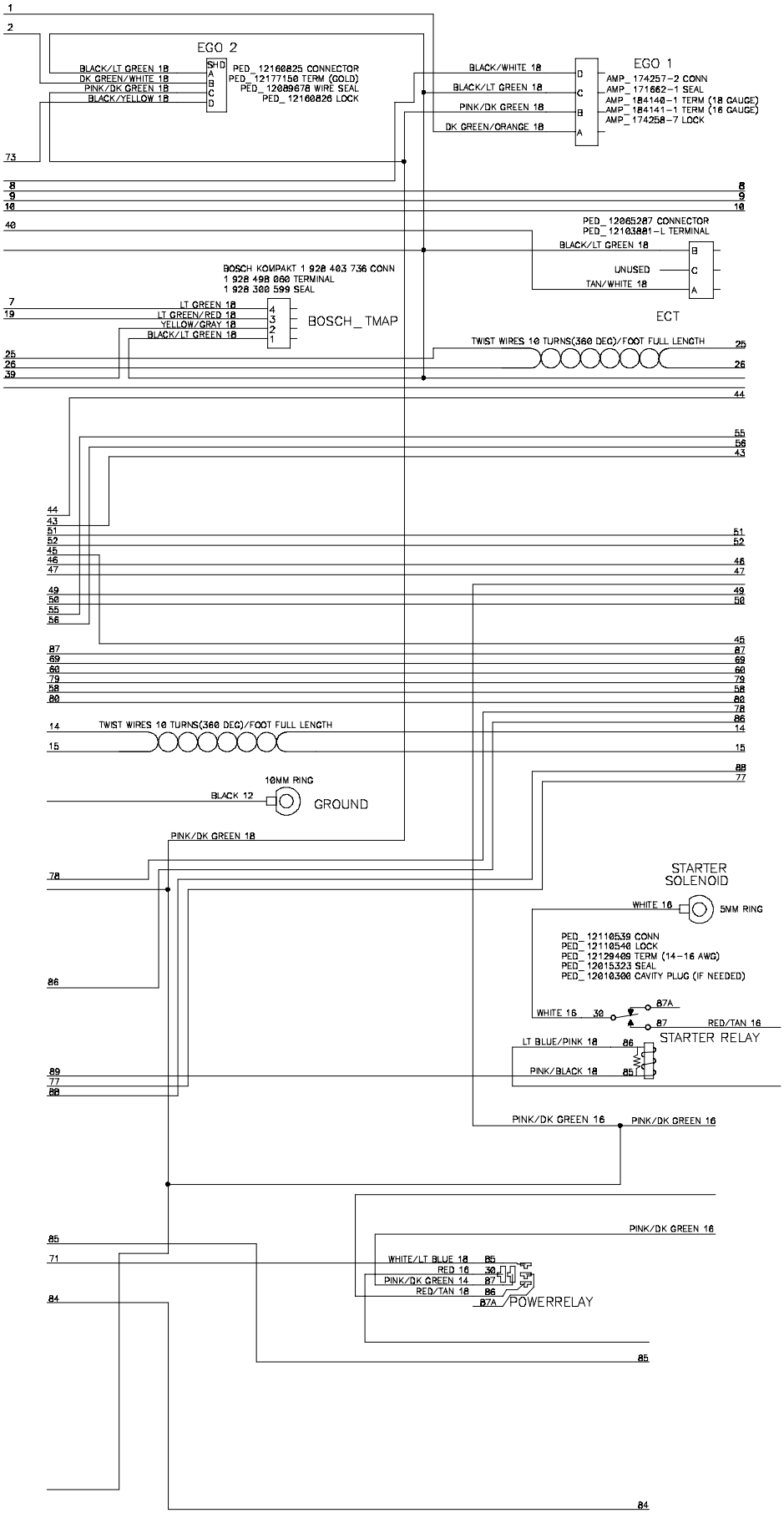

Fig. 117 - Wire Harnesses Schematic, Gas Engine (015000-)

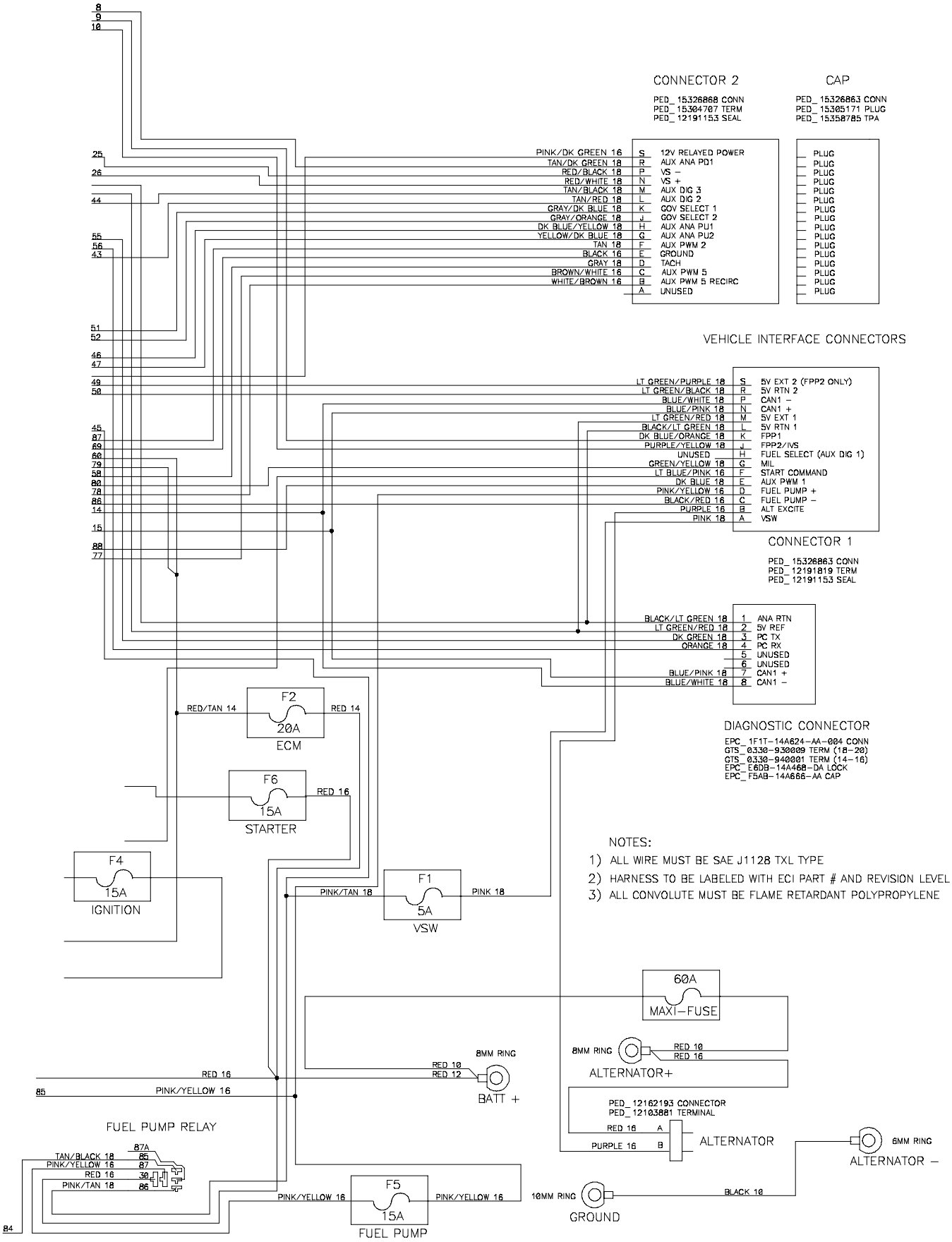

Fig. 118 - Wire Harnesses Schematic, LPG Engine (015000-)

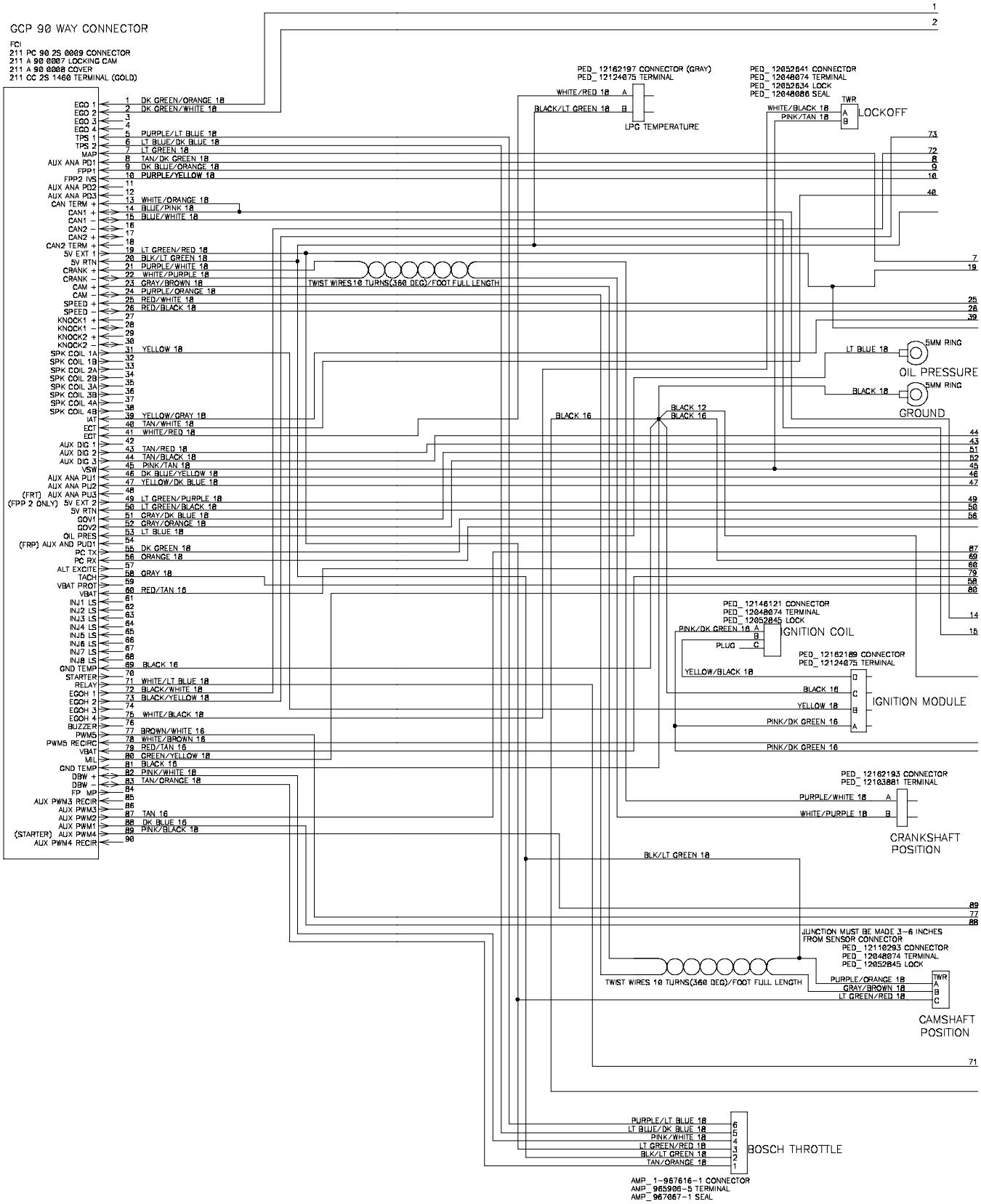

Fig. 118 - Wire Harnesses Schematic, LPG Engine (015000-)

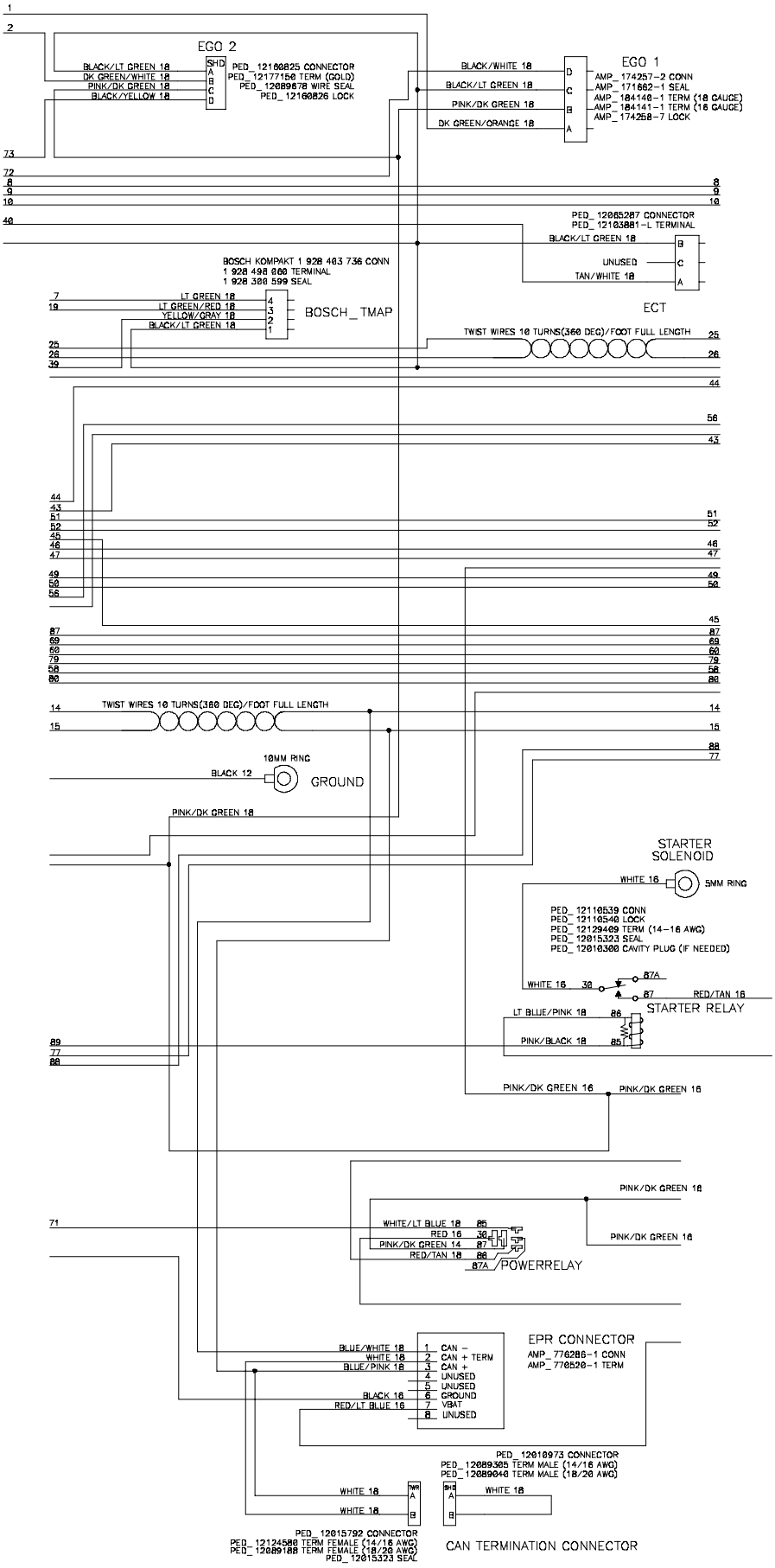

Fig. 118 - Wire Harnesses Schematic, LPG Engine (015000-)

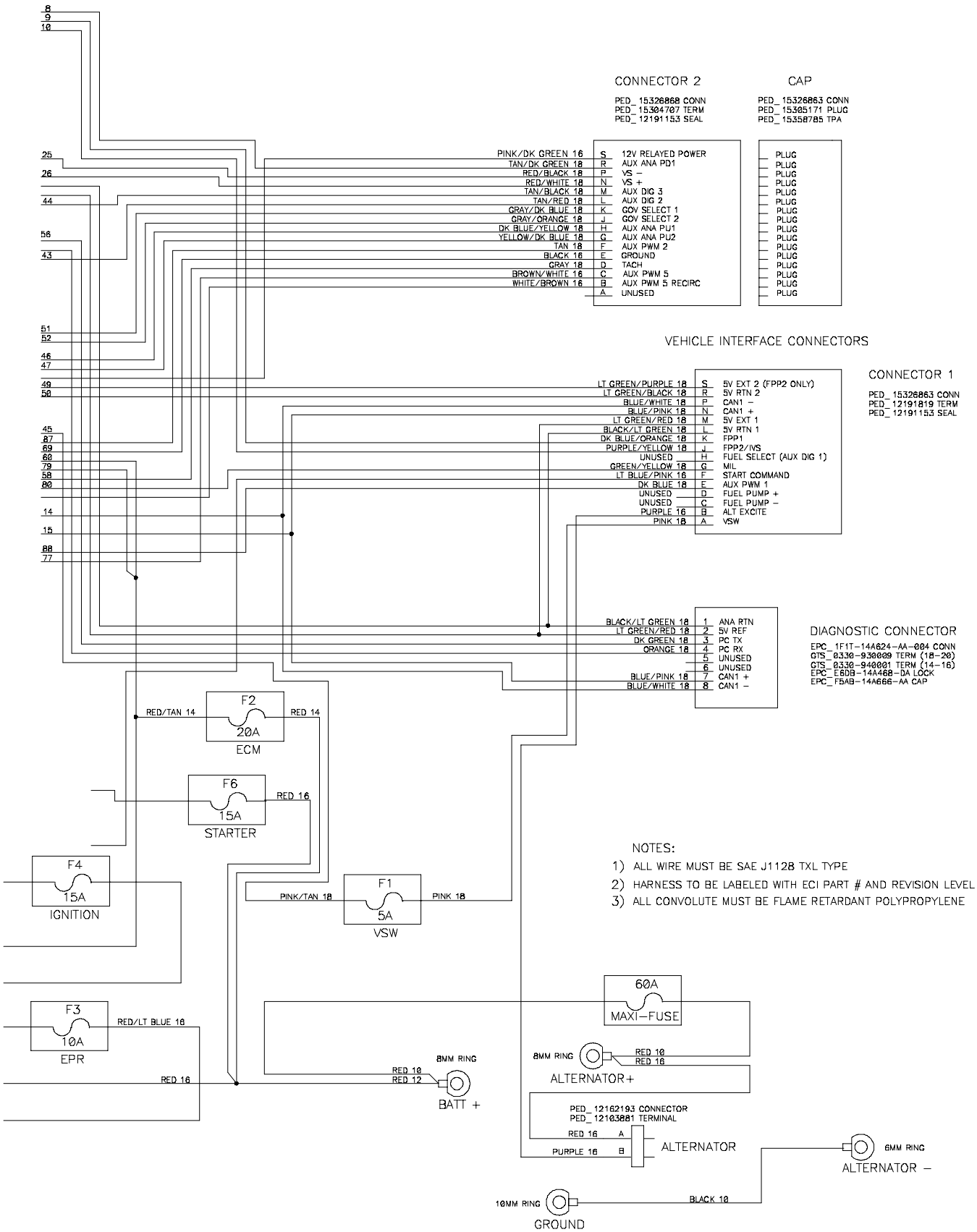

Fig. 119 - Wire Harnesses Group, Gas/LPG, Adaptor (015000-)

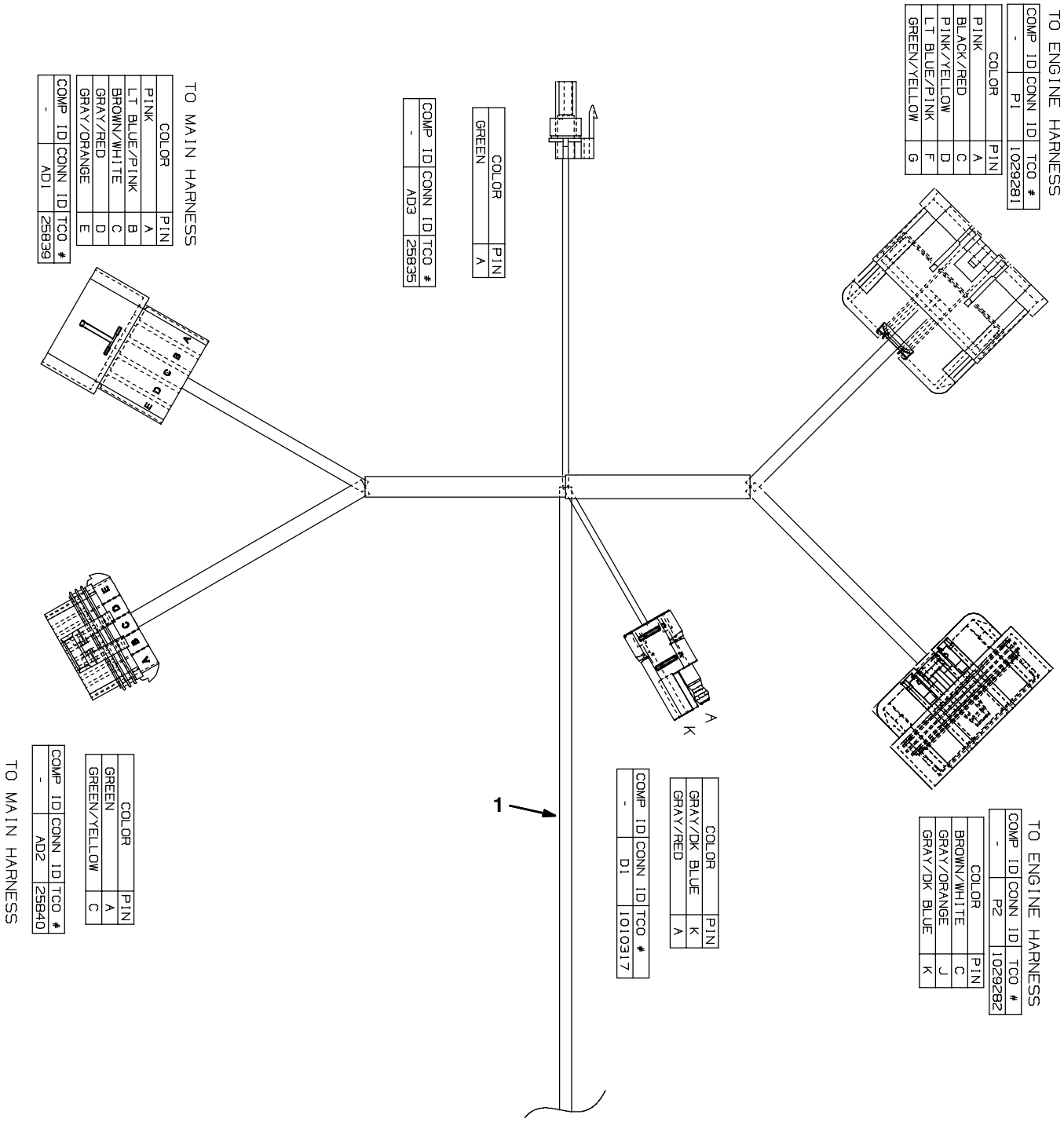

Fig. 119 - Wire Harnesses Group, Gas/LPG, Adaptor (015000-)

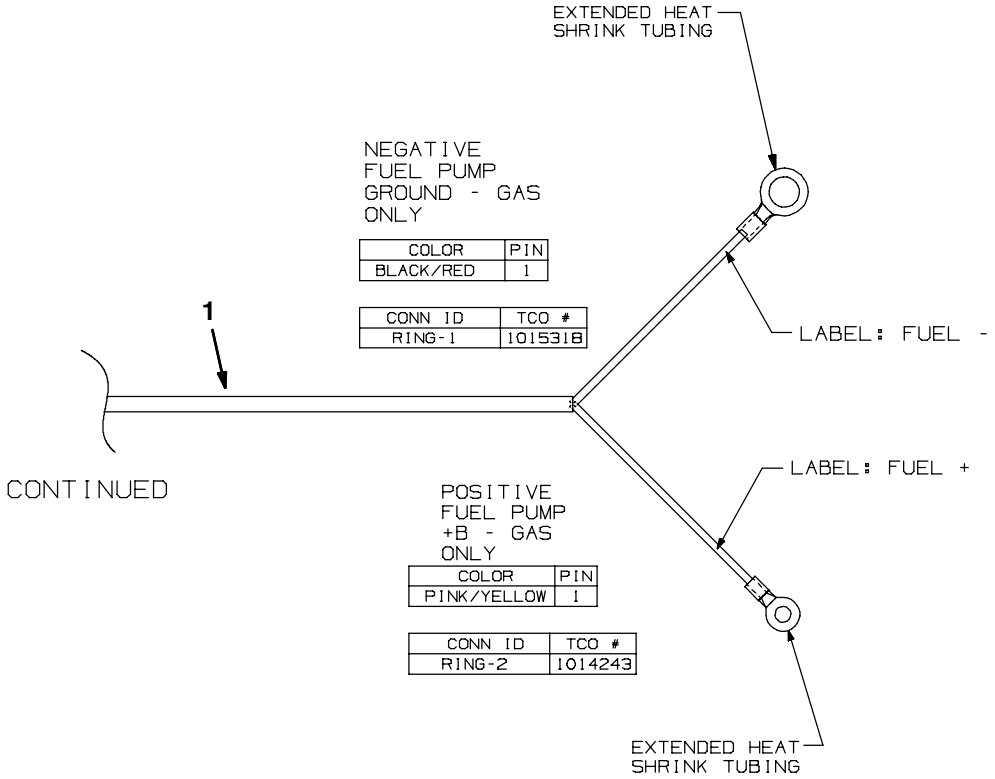

GM, G, LP

Ref.	Part No.	Serial Number	Description	Qty.
1	1032214	(015000-)	Harness, Adapter, Eng, Gas/Lpg [Gm3.0l]	1

Fig. 120 - Label Group

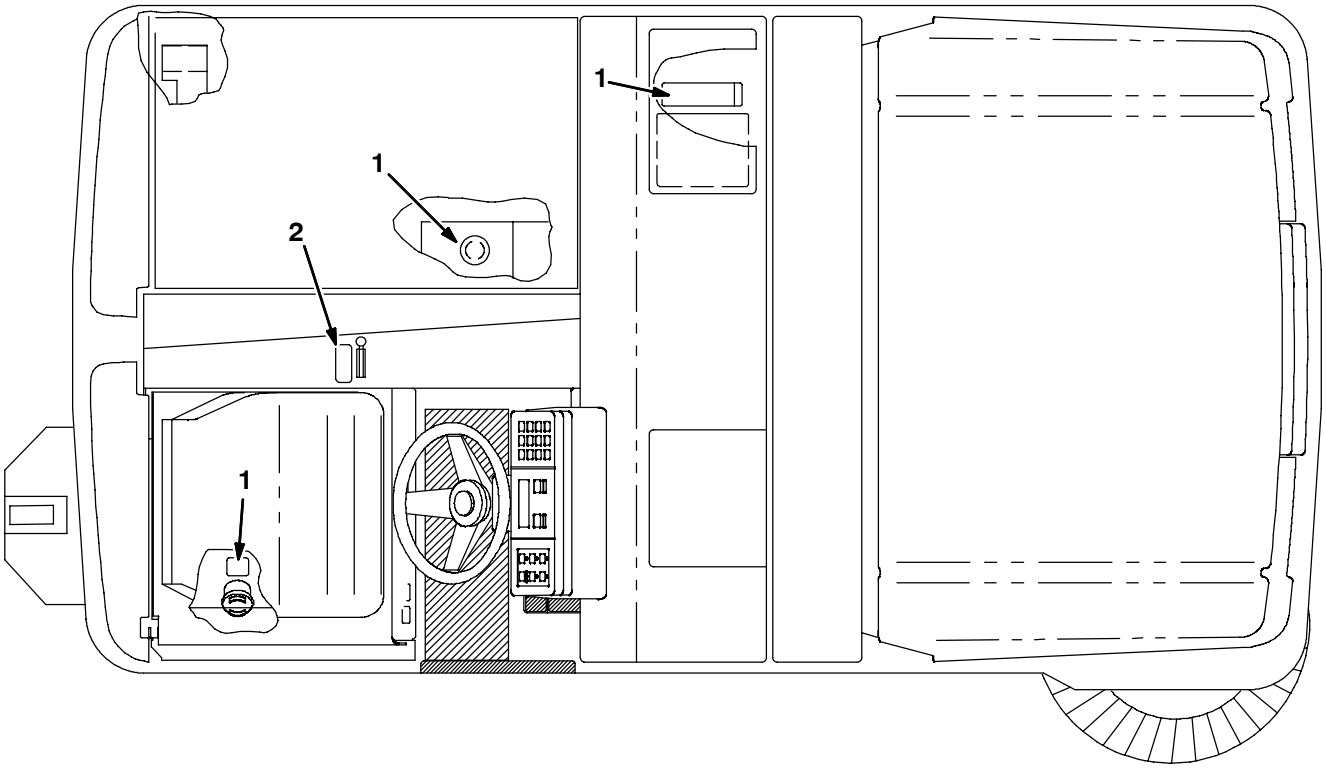

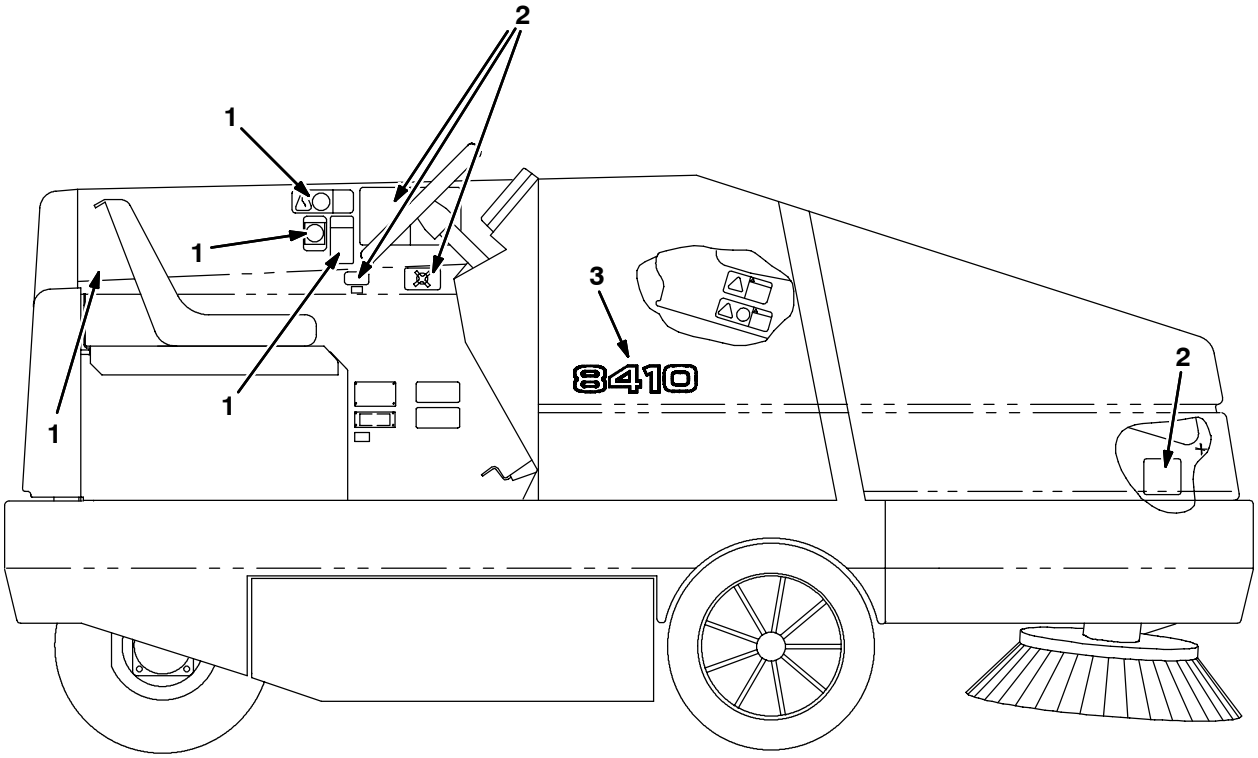

11087 - ALL

Ref.	Tennant Part No.	Machine Serial Number	Description	Qty.
1	77221	(000000-)	Label Set, Info & HZD 8400/8410	1
2	77352	(000000-)	Label Set, Operational 8400/8410	1
3	84027	(000000-)	Label, Numerals 8410	2

SECTION 3

Contents **Page**

Fig. 1 – ES Autofill Group 3-2
Fig. 2 – ES Pump Column Group 3-4
Fig. 3 – ES Detergent Tank Group 3-6
Fig. 4 – Light Kit, Signal 3-8
Fig. 5 – Light Kit, Flashing Overhead Guard . . 3-10
Fig. 6 – Light Kit, Revolving Overhead Guard . 3-12
Fig. 7 – Light Kit, Flashing LRC 3-14
Fig. 8 – Light Kit, Revolving LRC 3-16
Fig. 9 – Light Kit, Side Brush 3-18
Fig. 10 – Back-Up Alarm Kit 3-19
Fig. 11 – Overhead Guard Kit 3-20
Fig. 12 – Overhead Guard Kit, 87” 3-21
Fig. 13 – Seat Kit 3-22
Fig. 14 – Seat Mounting Bracket Kit 3-23
Fig. 15 – Seat Belt Kit 3-24
Fig. 16 – Fire Extinguisher Kit 3-25
Fig. 17 – Spark Arresting Muffler Group 3-26
Fig. 18 – Protectoseal Fuel Tank Cap Group . . . 3-27
Fig. 19 – Squeegee Wand Kit 3-28
Fig. 20 – Positive Solution Control Drain System Kit Std 3-29
Fig. 21 – Positive Solution Control Drain System Kit ES 3-30
Fig. 22 – Vacuumized Skirt Kit, Main Brush 3-31
Fig. 23 – Side Brush Dust Control Kit 3-32
Fig. 24 – Right Hand Side Squeegee Guard Kit . 3-34
Fig. 25 – Machine Transport Kit 3-36
Fig. 26 – LPG Tank Mount Kit, 43 lb 3-38
Fig. 27 – Heavy Duty Engine Air Filter Kit 3-39
Fig. 28 – Sight Gauge Kit 3-40
Fig. 29 – Solid Turf Tire and Wheel Assembly . . 3-41
Fig. 30 – Solid Non Marking Turf Tire and Wheel Assembly 3-42
Fig. 31 – Solid Non Marking Tire and Wheel Assembly 3-43
Fig. 32 – Documentation Group 3-44

Fig. 1 - ES Autofill Group

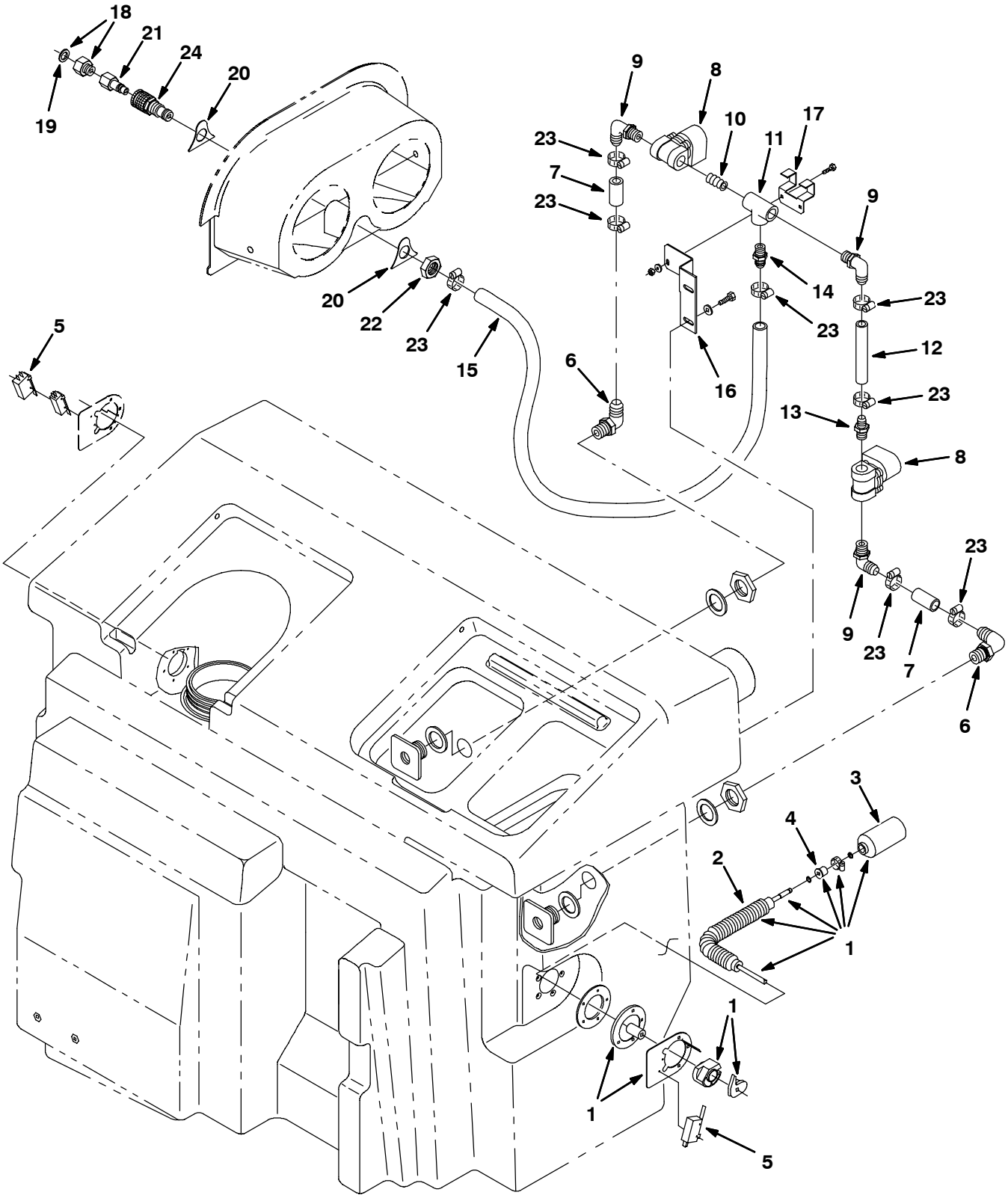

11054 - ALL

Fig. 1 - ES Autofill Group

	Ref.	Part No.	Serial Number	Description	Qty.
▽	1	73147	(000000-)	Level Sensing Assy	1
▲	2	73145	(000000-)	Bellows, .75 Id 10.3L	1
▲	3	50238	(000000-)	Float Bottle	1
▲	4	50256	(000000-)	Plug, Float	1
	5	1008147	(000000-)	Switch, Snap Actn, 250vdc 20a Dpdt	2
	6	73468	(000000-)	Fitting-Pls E90	2
	7	83806	(000000-)	Hose, Vinyl .62Id .88Od 2.0L	2
	8	73433	(000000-)	Valve, Solenoid, 12V Dc	2
	9	47701	(000000-)	Ftg,Plstc,Elb,Barb.50Pt-.62Hse	3
	10	86508	(000000-)	Fitting, Plstc, Str, Pm08/Pm08	1
	11	79497	(000000-)	Ftg,Plstc,Tee.50-.50-.50Pipe	1
	12	83807	(000000-)	Hose, Vinyl .62Id .88Od 5.3L	1
	13	41440	(000000-)	Ftg, Plastic,Str	1
	14	78398	(000000-)	Ftg,Plstc,Str,Barb.50Pt-.75Hse	1
	15	73478	(000000-)	Hose, Vinyl Clr, .75Idx 65.0Lg	1
	16	83799	(000000-)	Bracket, Angle	1
	17	83798	(000000-)	Bracket, Clamp	1
▽	18	375322	(000000-)	Kit, Fitting, Garden Hose	1
▲	19	01316	(000000-)	Washer, Rbr, .12 0.66b 1.00d	1
	20	10672	(000000-)	Plate, Backup	2
	21	33295	(000000-)	Ftg Qkdisc, Male	1
	22	48988	(000000-)	Nut-Hx Jam 1.00-14 Pltd	1
	23	86824	(000000-)	Clamp-Wormdrive 0.50-1.06D	8
	24	10678	(000000-)	Fitting, Bulkhead Fem,	1

Fig. 2 - ES Pump Column Group

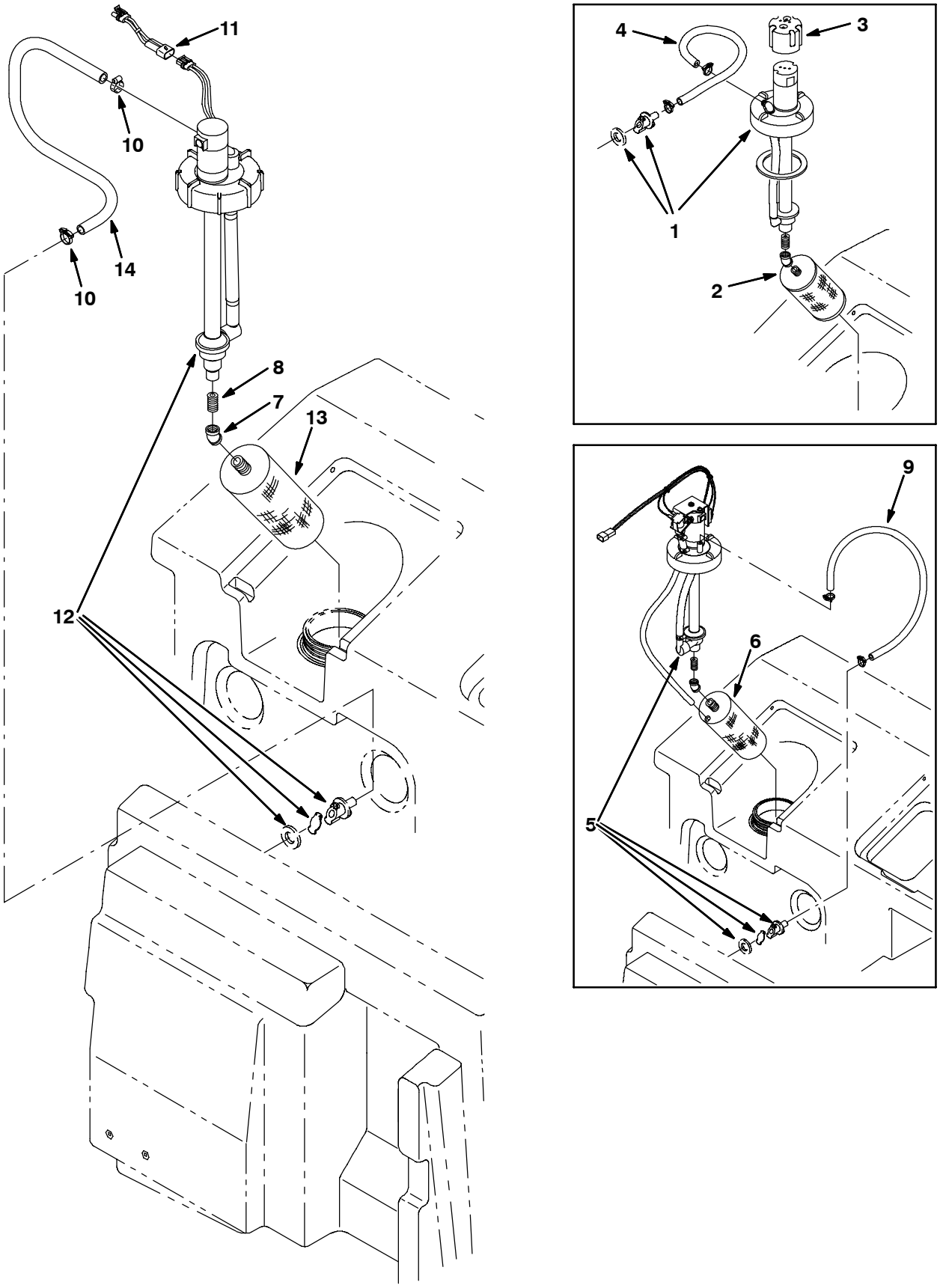

11056 - ALL

Fig. 2 - ES Pump Column Group

Ref.	Part No.	Serial Number	Description	Qty.
1	20866	(000000-012499)	Kit, Backflush, W/Harness Replaces 379001 (See Breakdowns)	1
2	10573	(000000-012499)	Screen, Sol, Dbl Cylindrical	1
3	77237	(000000-012499)	Cover, Motor	1
4	71167	(000000-012499)	Hose, Rubber	1
5	20891	(012500-014238)	Pump, Water (See Breakdowns)	1
6	20895	(012500-014238)	Filter, Backflush 35 Mesh	1
7	10575	(000000-)	Fitting, Plastic	1
8	69784	(000000-)	Fitting, Plstc	1
9	374631	(012500-014238)	Hose, Molded, Es	1
10	71168	(000000-)	Clamp, Hose	2
11	391946	(014239-)	Harness, Jumper, Pump [7400/8410]	1
12	1021210	(014239-)	Pump Assy, Column, Es (See Breakdowns)	1
13	10573	(014239-)	Strainer, Soltn, 20 Mesh, Cyl 4.0d 8.0l	1
14	369811	(014239-)	Hose, Pvc, Brd, 0.62id 0.88od 09.00l	1

Fig. 3 - ES Detergent Tank Group

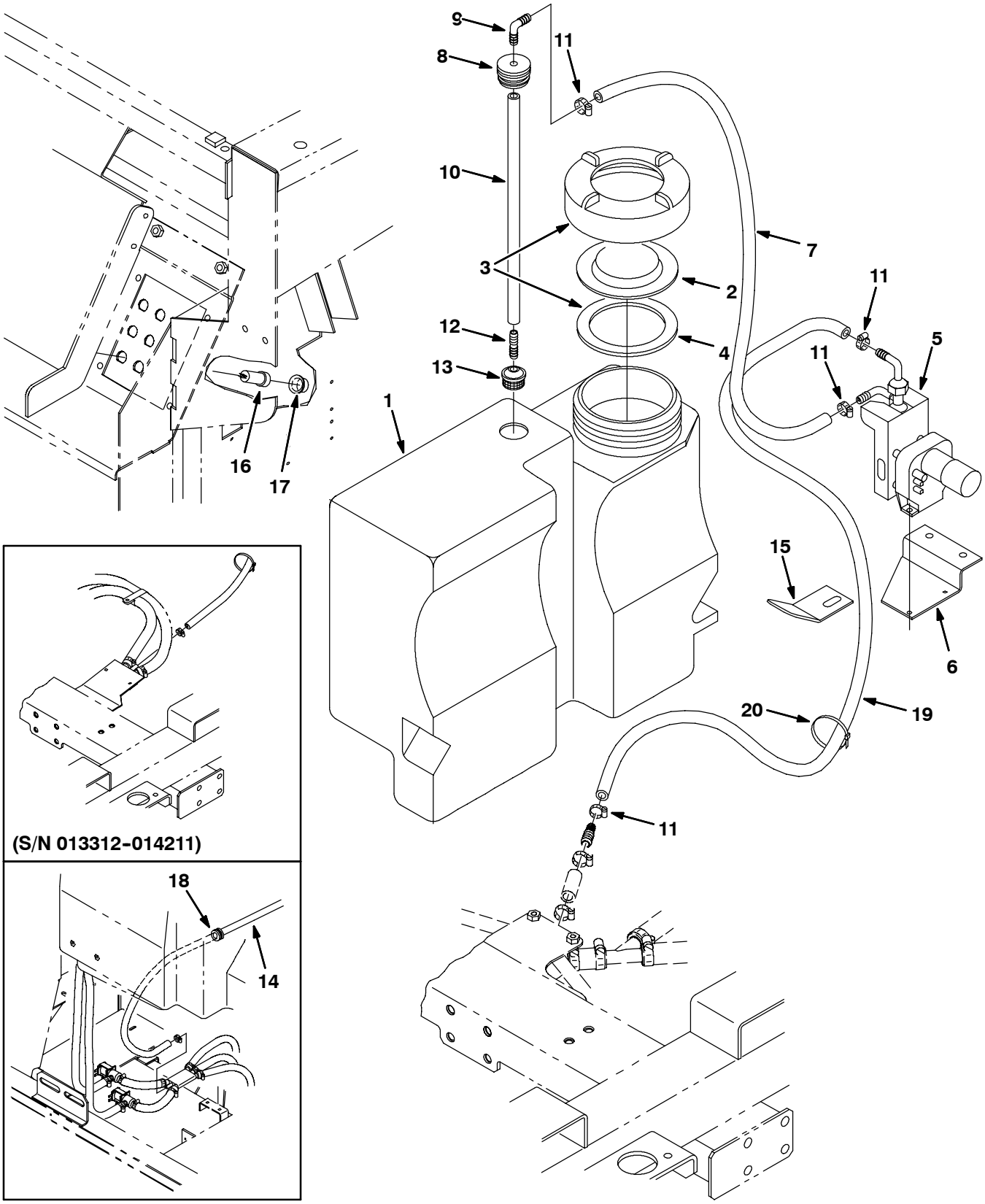

11058 - ALL

Fig. 3 - ES Detergent Tank Group

	Ref.	Part No.	Serial Number	Description	Qty.
	1	72991	(000000-)	Tank, Detergent	1
	2	86636	(000000-)	Cover Lid	1
▽	3	24358	(000000-)	Cap Tank	1
▲	4	1031699	(000000-)	Gasket, .19, 4.05id 5.29od [Buna]	1
	5	73260	(000000-)	Pump, Detergent Metering (See Breakdowns)	1
	6	72990	(000000-)	Bracket, Metering Pump	1
	7	22787	(000000-)	Hose, Vinyl, Cl Nyre .38Idx28L	1
	8	20944	(000000-)	Grommet, Detergent Tank	1
	9	20951	(000000-)	Fitting-Barb,90Deg,3/8 Id Hose	1
	10	22786	(000000-)	Hose, Vinyl, Cl Nyre .38Idx21L	1
	11	43844	(000000-)	Clamp-Wormdrive, 0.25- 0.62D	4
	12	20950	(000000-)	Fitting-Barb, Strt 3/8 Id Hose	1
	13	20952	(000000-)	Screen, Pump, Detergent	1
	14	84084	(000000-013311)	Hose, Vinyl Clr.38Id X 80.0Lg	1
	15	72989	(000000-)	Bracket, Detergent Tank	1
	16	57803	(000000-)	Breaker-Circuit, 15A Resetable	1
	17	57751	(000000-)	Boot,Circuit Breaker	1
	18	10632-18	(000000-013311)	Grommet, Rbr, 0.69Id	1
	19	22787	(013312-)	Hose, Vinyl, Cl Nyre .38Idx28L	1
	20	49266	(013312-)	Tie, Cable, Nyl, 07.3l .19w 1.8 Max D	1

Fig. 4 - Light Kit, Signal

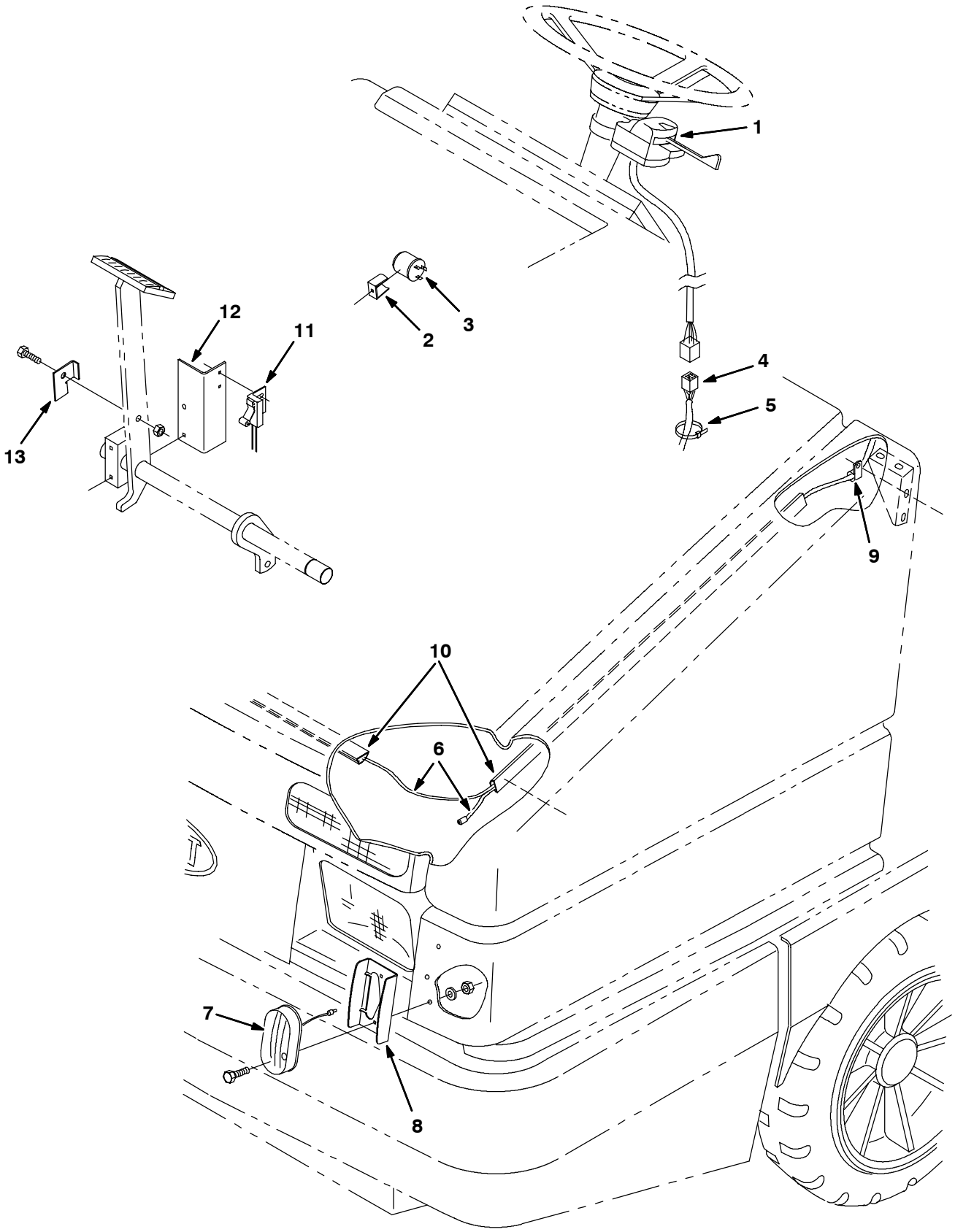

09674 - ALL

Fig. 4 - Light Kit, Signal

	Ref.	Part No.	Serial Number	Description	Qty.
▽		73455	(000000-)	Light Kit Signal	1
▲▽	1	60751	(000000-)	Signal Turn	1
▲▲		48570	(000000-)	Bulb, 12V .1A 01Cp #53	1
▲	2	24576-1	(000000-)	Bracket, Flasher	1
▲	3	31922	(000000-)	Flasher Heavy Duty	1
▲	4	73440	(000000-)	Harness, Turn Signal	1
▲	5	49266	(000000-)	Tie, Cable 1.75D Max 7.50Lg	6
▲	6	60284	(000000-)	Harness, Turn Signal	1
▲▽	7	34848	(000000-)	Light Assy Mark/Yel 12V- . A	2
▲▲		87948	(000000-)	Bulb, 12V .27A 2Cp #194	1
▲	8	72178	(000000-)	Bracket, Light, Sbdc	2
▲	9	40678	(000000-)	Clamp,Cable .44D .62Wide	1
▲	10	86332	(000000-)	Duct, Vinyl .40X.75X26.0 .25D	2
▲	11	59962	(000000-)	Switch, Roller	1
▲	12	73425	(000000-)	Bracket, Switch	1
▲	13	78935	(000000-)	Bracket	1

Fig. 5 - Light Kit, Flashing Overhead Guard

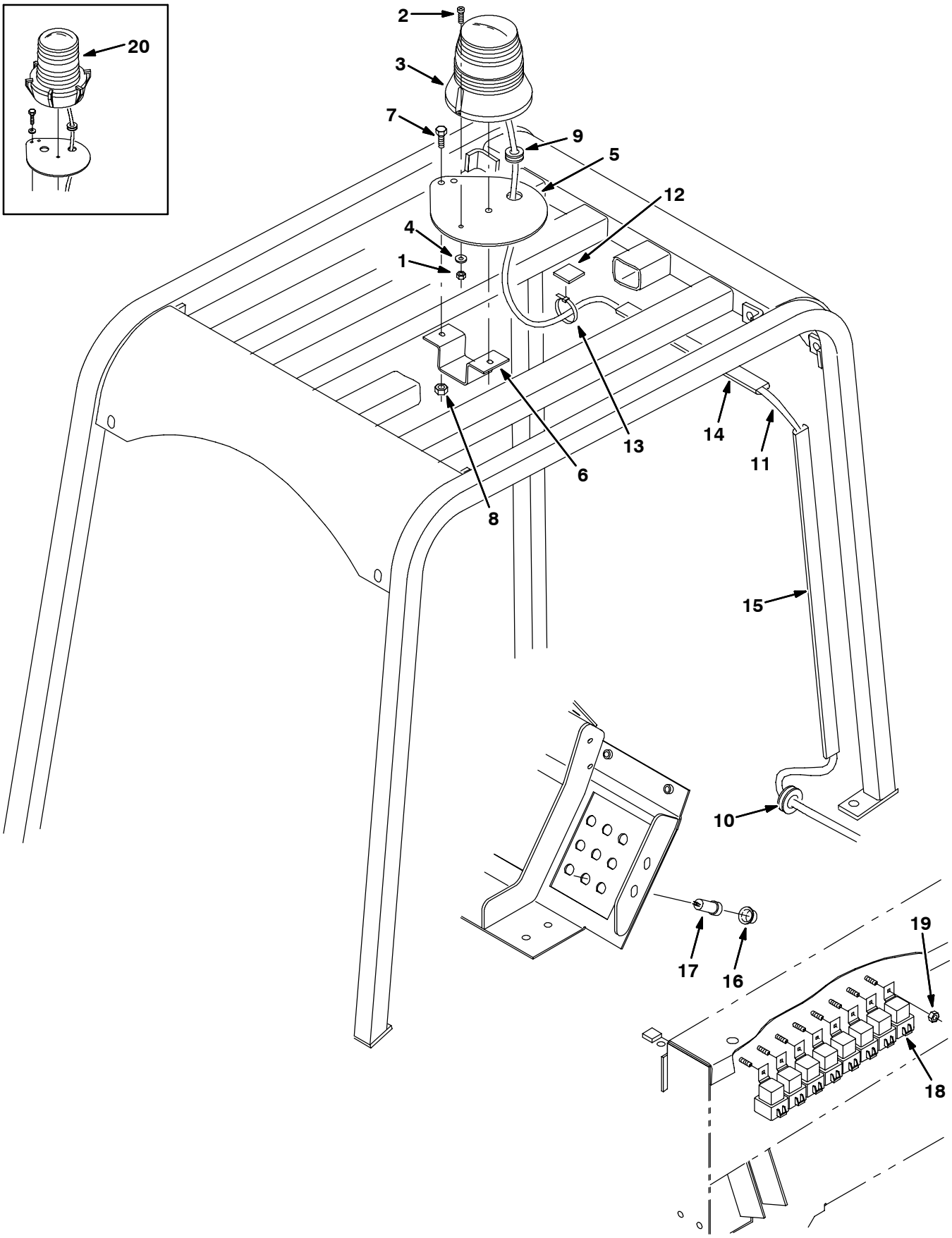

09680 - ALL

Fig. 5 - Light Kit, Flashing Overhead Guard

	Ref.	Part No.	Serial Number	Description	Qty.
▽		73457	(000000-)	Light Kit, Strobe, Ohg, Ci [8400/10]	1
▲	1	06549	(000000-)	Nut, Hex, Lock, M5 X 0.8, Nl	2
▲	2	09244	(000000-)	Screw, Hex, M5 X 0.8 X 16, 8.8	2
▲▽	3	1017250	(014206-)	Lamp Strobe, Amb [12-48 Vdc]	1
▲▲		9000879	(014206-)	Lens, Lamp, Amb, Strobe/Flasher	1
▲▲		9000846	(014206-)	Lamp, Bulb, Lamp, Strobe	1
▲		29192	(014206-)	Terminal, Ring, .25stud 16-14ga, Ins	1
▲		55272	(014206-)	Terminal, Bullet, Mal, .157d, 12ga	1
▲	4	19066	(000000-)	Washer, Flat, #10	2
▲	5	57220	(000000-)	Plate, Mtg, Light	1
▲	6	59447	(000000-)	Bracket, Mtg, Light, Ohg	1
▲	7	06942	(000000-)	Screw, Hex, M6 X 1.0 X 16, 8.8	1
▲	8	07790	(000000-)	Nut, Hex, Flng, M6 X 1.0	1
▲	9	10632-9	(000000-)	Grommet, Rbr, 0.63id, F/0.8h, .12 Matl	1
▲	10	10632-18	(000000-)	Grommet, Rbr, 0.69id, F/0.1h, .25 Matl	1
▲	11	60288	(000000-)	Harness, Light, Revl, Ohg [355l]	1
▲	12	55248	(000000-)	Mount, Cable Tie	10
▲	13	49266	(000000-)	Tie, Cable, Nyl, 07.3l .19w 1.8 Max D	16
▲	14	86330	(000000-)	Duct, Vyl, 0.40 X 0.75 .25d 10.0l	2
▲	15	78732	(000000-)	Duct, Vyl, 0.40 X 0.75 .25d 19.0l	1
▲		72114	(000000-)	Duct, Vyl, 0.40 X 0.75 .25d 06.0l	1
▲	16	57751	(000000-)	Boot, Dome, .72id .72l, Clear	1
▲	17	57803	(000000-)	Circuitbreaker, 15.0a [Resetable]	1
▲	18	56186	(000000-)	Relay, 12vdc, 40a, Spdt N/O	1
▲	19	08708	(000000-)	Nut, Hex, Lock, M6 X 1.0, Nl	1
▽	20	82063	(000000-014205)	Light, Flsh, 12vdc, Amb, Rwk 82198	1
▲		58520	(000000-014205)	Lens, Amb, Flsh Light [Fr207]	1
▲		45779	(000000-014205)	Lamp, 12vdc, 2.1a, 32cp [#1156]	1
		58518	(000000-014205)	Lens, Red, Flsh Light [Fr207]	1
		58519	(000000-014205)	Lens, Blu, Flsh Light [Fr207]	1

Fig. 6 - Light Kit, Revolving Overhead Guard

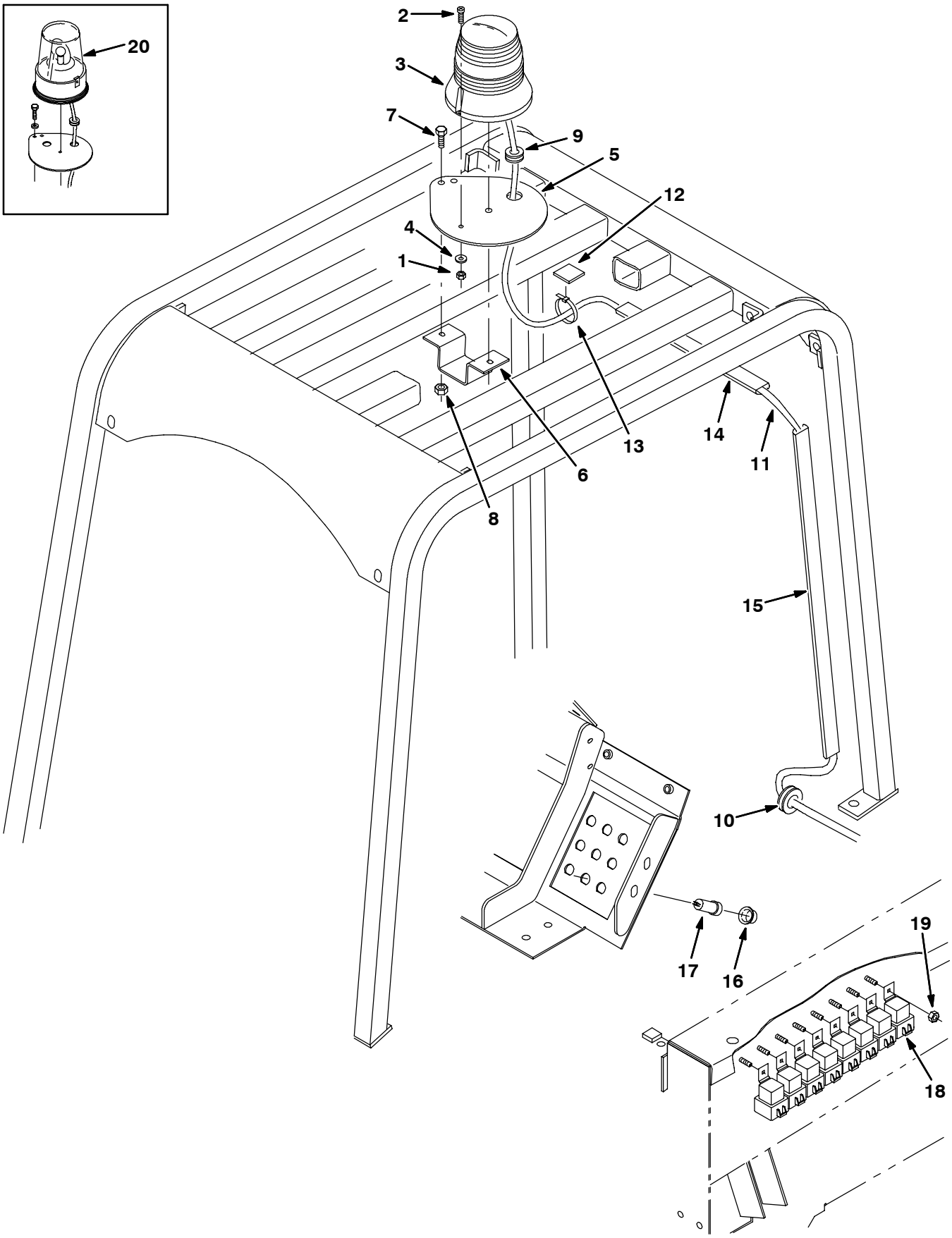

09680 - ALL

Fig. 6 - Light Kit, Revolving Overhead Guard

	Ref.	Part No.	Serial Number	Description	Qty.
▽		73457	(000000-)	Light Kit, Strobe, Ohg, Ci [8400/10]	1
▲	1	06549	(000000-)	Nut, Hex, Lock, M5 X 0.8, Nl	2
▲	2	09244	(000000-)	Screw, Hex, M5 X 0.8 X 16, 8.8	2
▲▽	3	1017250	(014206-)	Lamp Strobe, Amb [12-48 Vdc]	1
▲▲		9000879	(014206-)	Lens, Lamp, Amb, Strobe/Flasher	1
▲▲		9000846	(014206-)	Lamp, Bulb, Lamp, Strobe	1
▲		29192	(014206-)	Terminal, Ring, .25stud 16-14ga, Ins	1
▲		55272	(014206-)	Terminal, Bullet, Mal, .157d, 12ga	1
▲	4	19066	(000000-)	Washer, Flat, #10	2
▲	5	57220	(000000-)	Plate, Mtg, Light	1
▲	6	59447	(000000-)	Bracket, Mtg, Light, Ohg	1
▲	7	06942	(000000-)	Screw, Hex, M6 X 1.0 X 16, 8.8	1
▲	8	07790	(000000-)	Nut, Hex, Flng, M6 X 1.0	1
▲	9	10632-9	(000000-)	Grommet, Rbr, 0.63id, F/0.8h, .12 Matl	1
▲	10	10632-18	(000000-)	Grommet, Rbr, 0.69id, F/0.1h, .25 Matl	1
▲	11	60288	(000000-)	Harness, Light, Revl, Ohg [355l]	1
▲	12	55248	(000000-)	Mount, Cable Tie	10
▲	13	49266	(000000-)	Tie, Cable, Nyl, 07.3l .19w 1.8 Max D	16
▲	14	86330	(000000-)	Duct, Vyl, 0.40 X 0.75 .25d 10.0l	2
▲	15	78732	(000000-)	Duct, Vyl, 0.40 X 0.75 .25d 19.0l	1
▲		72114	(000000-)	Duct, Vyl, 0.40 X 0.75 .25d 06.0l	1
▲	16	57751	(000000-)	Boot, Dome, .72id .72l, Clear	1
▲	17	57803	(000000-)	Circuitbreaker, 15.0a [Resetable]	1
▲	18	56186	(000000-)	Relay, 12vdc, 40a, Spdt N/O	1
▲	19	08708	(000000-)	Nut, Hex, Lock, M6 X 1.0, Nl	1
▽	20	82200	(000000-014205)	Light, Flsh, 12vdc, Amb, Rwk	1
▲		44681-1	(000000-014205)	Lens, Light, Revl, Amb	1
▲		45779	(000000-014205)	Lamp, 12vdc, 2.1a, 32cp [#1156]	1
		44681	(000000-014205)	Lens, Light, Revl, Red	1
		44681-2	(000000-014205)	Lens, Light, Revl, Blu	1

Fig. 7 - Light Kit, Flashing LRC

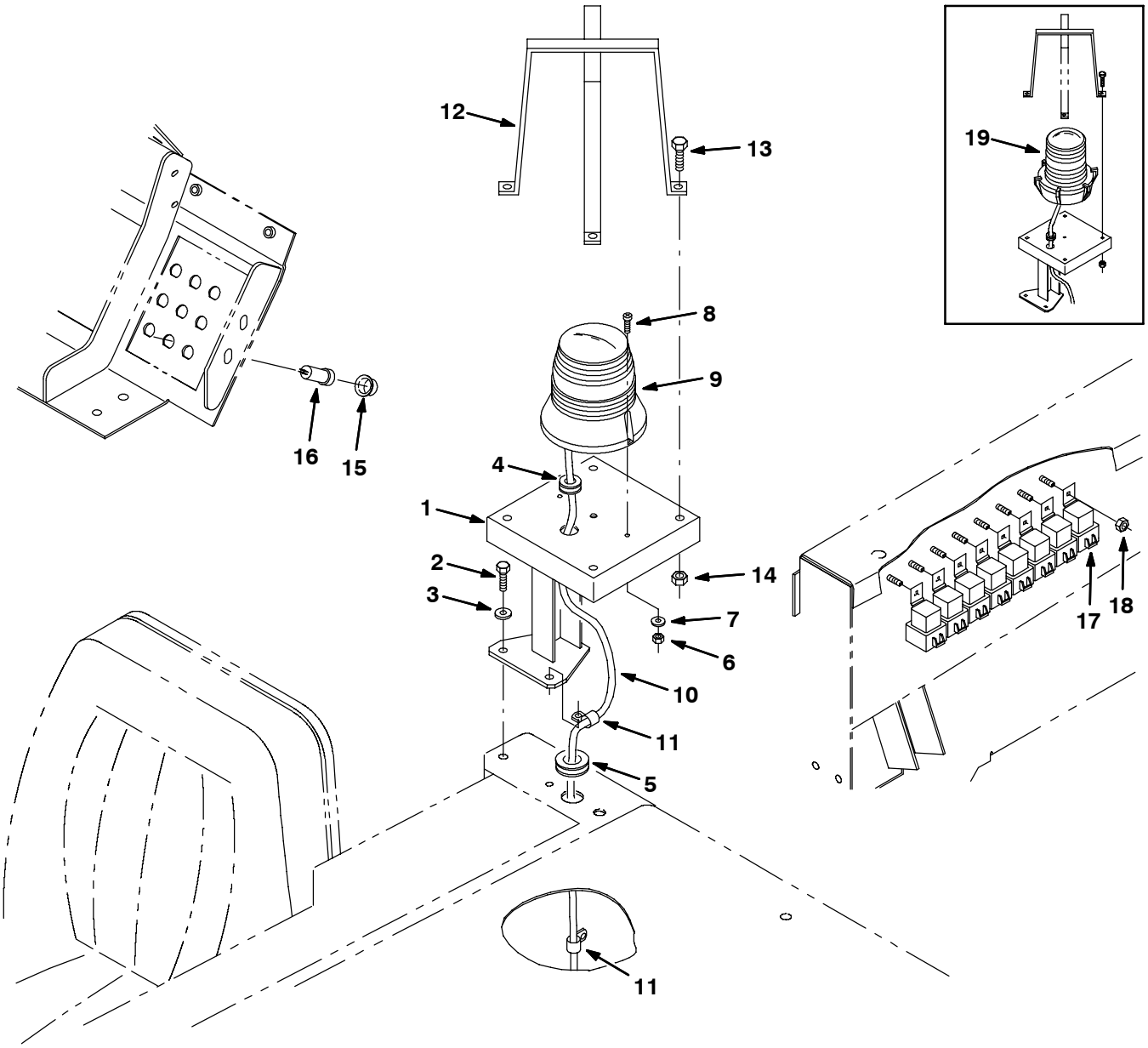

09684 - ALL

Fig. 7 - Light Kit, Flashing LRC

	Ref.	Part No.	Serial Number	Description	Qty.
▽		73461	(000000-)	Light Kit, Strobe, Ped, Ci [8400/10]	1
▲	1	73405	(000000-)	Bracket, Wldt, Light, Rotating	1
▲	2	16931	(000000-)	Screw, Hex, M8 X 1.25 X 20, 8.8	2
▲	3	32491	(000000-)	Washer, Flat, 0.31, Std	2
▲	4	10632-9	(000000-)	Grommet, Rbr, 0.63id, F/0.8h, .12 Matl	2
▲	5	10632-18	(000000-)	Grommet, Rbr, 0.69id, F/0.1h, .25 Matl	1
▲	6	06549	(000000-)	Nut, Hex, Lock, M5 X 0.8, Nl	2
▲	7	08793	(14206-)	Washer, Flat, .20b .50d .06, Alm, Blind	2
▲	8	09244	(14206-)	Screw, Hex, M5 X 0.8 X 16, 8.8	2
▲▽	9	1017250	(14206-)	Lamp Strobe, Amb [12-48 Vdc]	1
▲▲		9000879	(14206-)	Lens, Lamp, Amb, Strobe/Flasher	1
▲▲		9000845	(14206-)	Lamp, Bulb, Lamp, Flsh	1
▲		55272	(14206-)	Terminal, Bullet, Mal, .157d, 12ga	1
▲		29192	(14206-)	Terminal, Ring, .25stud 16-14ga, Ins	1
▲	10	71543	(000000-)	Harness, Light, Flsh, Revl, [355l]	1
▲	11	46236	(000000-)	Clamp, Cable, Stl, 0.25d X 0.56w, 1h	2
▲	12	45272	(000000-)	Guard Wldt, Light, Revl/Flsh	1
▲	13	06943	(000000-)	Screw, Hex, M6 X 1.0 X 20, 8.8	4
▲	14	08708	(000000-)	Nut, Hex, Lock, M6 X 1.0, Nl	4
▲	15	57751	(000000-)	Boot, Dome, .72id .72l, Clear	1
▲	16	57803	(000000-)	Circuitbreaker, 15.0a [Resetable]	1
▲	17	56186	(000000-)	Relay, 12vdc, 40a, Spdt N/O	1
▲	18	08708	(000000-)	Nut, Hex, Lock, M6 X 1.0, Nl	1
▽	19	82063	(000000-14205)	Light, Flsh, 12vdc, Amb, Rwk 82198	1
▲		58520	(000000-14205)	Lens, Amb, Flsh Light [Fr207]	1
▲		45779	(000000-14205)	Lamp, 12vdc, 2.1a, 32cp [#1156]	1
		58518	(000000-14205)	Lens, Red, Flsh Light [Fr207]	1
		58519	(000000-14205)	Lens, Blu, Flsh Light [Fr207]	1

Fig. 8 - Light Kit, Revolving LRC

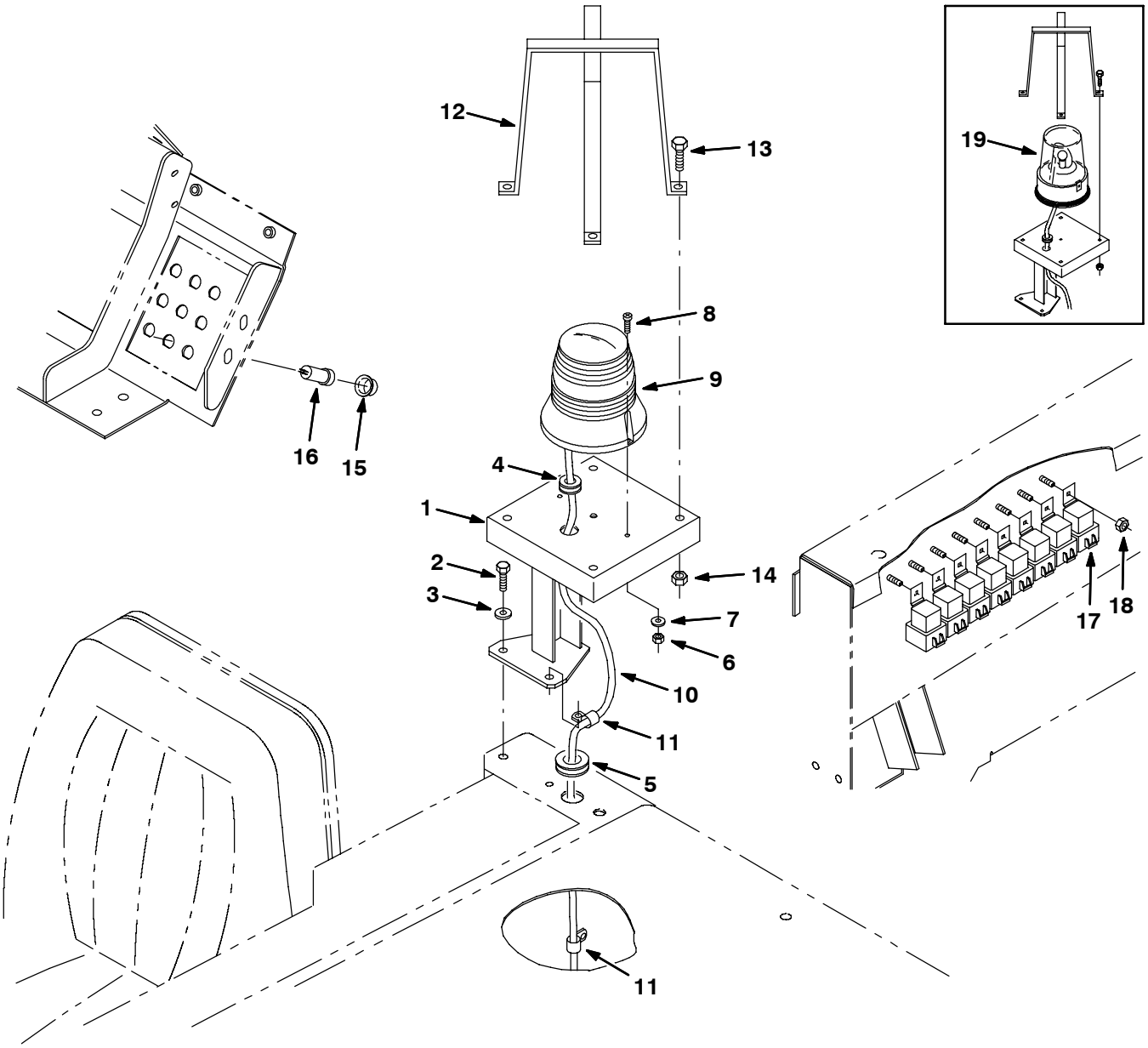

09686 - ALL

Fig. 8 - Light Kit, Revolving LRC

	Ref.	Part No.	Serial Number	Description	Qty.
▽		73463	(000000-)	Light Kit, Flsh, Ped, Ci [8400/10]	1
▲	1	73405	(000000-)	Bracket, Wldt, Light, Rotating	1
▲	2	16931	(000000-)	Screw, Hex, M8 X 1.25 X 20, 8.8	2
▲	3	32491	(000000-)	Washer, Flat, 0.31, Std	2
▲	4	10632-9	(000000-)	Grommet, Rbr, 0.63id, F/0.8h, .12 Matl	2
▲	5	10632-18	(000000-)	Grommet, Rbr, 0.69id, F/0.1h, .25 Matl	1
▲	6	06549	(000000-)	Nut, Hex, Lock, M5 X 0.8, Nl	2
▲	7	08793	(14206-)	Washer, Flat, .20b .50d .06, Alm, Blind	2
▲	8	09244	(14206-)	Screw, Hex, M5 X 0.8 X 16, 8.8	2
▲▽	9	1017250	(14206-)	Lamp Strobe, Amb [12-48 Vdc]	1
▲▲		9000879	(14206-)	Lens, Lamp, Amb, Strobe/Flasher	1
▲▲		9000845	(14206-)	Lamp, Bulb, Lamp, Flsh	1
▲		55272	(14206-)	Terminal, Bullet, Mal, .157d, 12ga	1
▲		29192	(14206-)	Terminal, Ring, .25stud 16-14ga, Ins	1
▲	10	71543	(000000-)	Harness, Light, Flsh, Revl, [355l]	1
▲	11	46236	(000000-)	Clamp, Cable, Stl, 0.25d X 0.56w, 1h	2
▲	12	45272	(000000-)	Guard Wldt, Light, Revl/Flsh	1
▲	13	06943	(000000-)	Screw, Hex, M6 X 1.0 X 20, 8.8	4
▲	14	08708	(000000-)	Nut, Hex, Lock, M6 X 1.0, Nl	4
▲	15	57751	(000000-)	Boot, Dome, .72id .72l, Clear	1
▲	16	57803	(000000-)	Circuitbreaker, 15.0a [Resetable]	1
▲	17	56186	(000000-)	Relay, 12vdc, 40a, Spdt N/O	1
▲	18	08708	(000000-)	Nut, Hex, Lock, M6 X 1.0, Nl	1
▽	19	82200	(000000-14205)	Light, Flsh, 12vdc, Amb, Rwk	1
▲		44681-1	(000000-14205)	Lens, Light, Revl, Amb	1
▲		45779	(000000-14205)	Lamp, 12vdc, 2.1a, 32cp [#1156]	1
		44681	(000000-14205)	Lens, Light, Revl, Red	1
		44681-2	(000000-14205)	Lens, Light, Revl, Blu	1

Fig. 9 - Light Kit, Side Brush

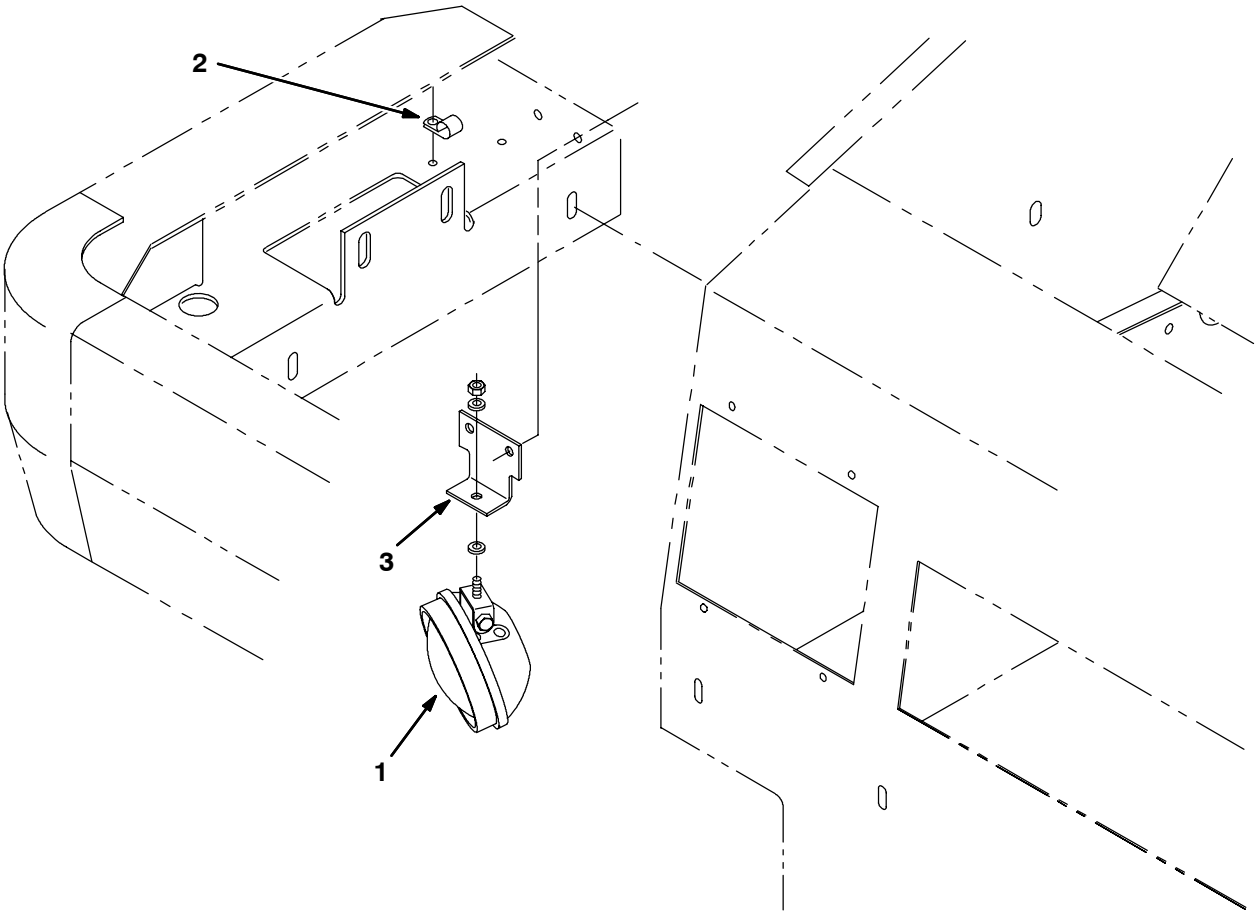

09688 - ALL

	Ref.	Part No.	Serial Number	Description	Qty.
▽		73470	(000000-)	Light Kit, Side Brush	1
▲▽	1	73403	(000000-)	Light Assy Work/Clr 12V- . A	1
▲▲		51570	(000000-)	Bulb GE	1
▲	2	40678	(000000-)	Clamp, Cable .44D .62Wide	1
▲	3	79397	(000000-)	Bracket, Mounting	1

Fig. 10 - Back-Up Alarm Kit

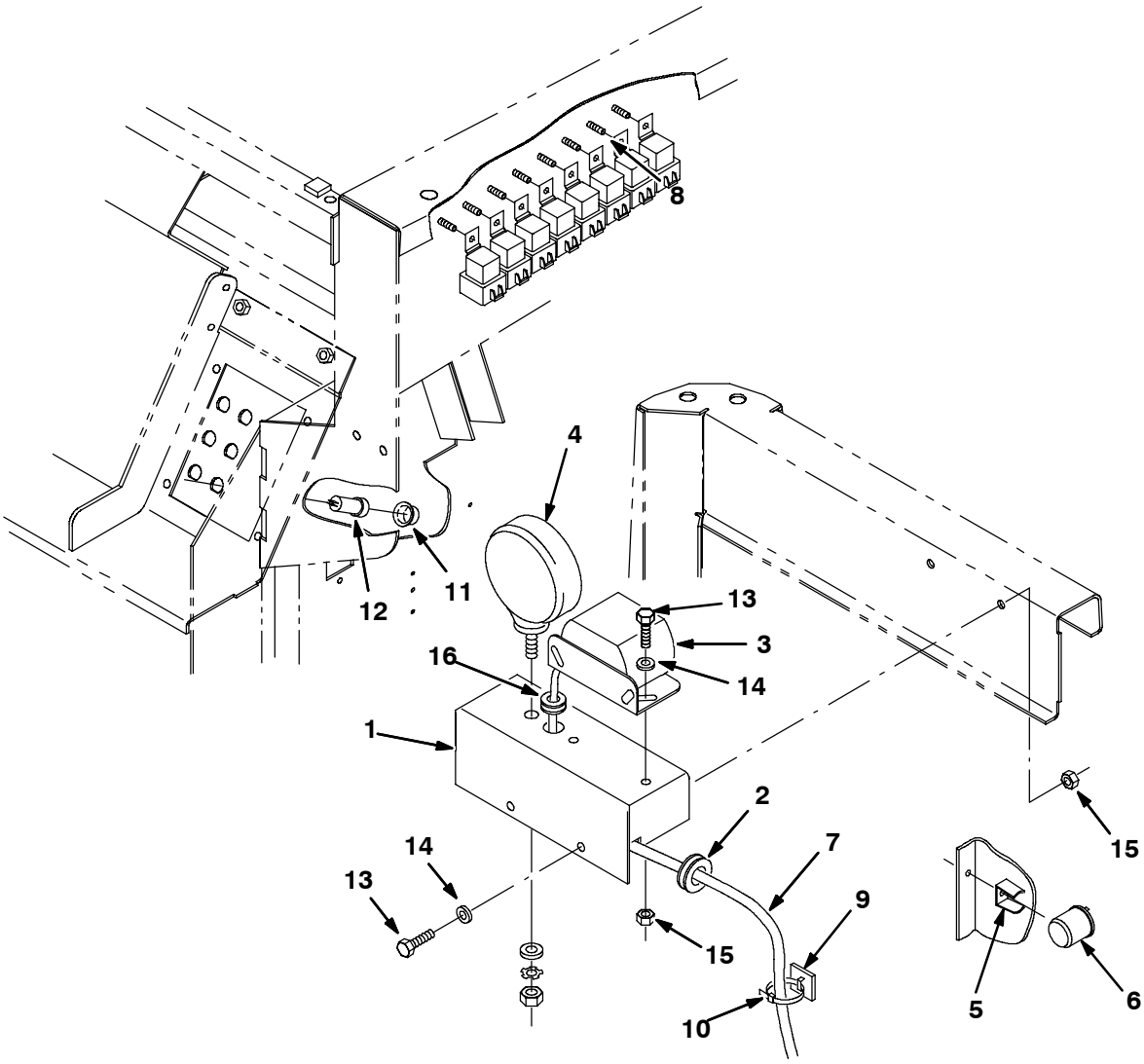

11185 - ALL

	Ref.	Part No.	Serial Number	Description	Qty.
▽		84073	(000000-)	Alarm Kit, Backup	1
▲	1	73421	(000000-)	Bracket, Alarm Backup	1
▲	2	10632-18	(000000-)	Grommet,Rbr,0.69Id,For.25Matl	1
▲	3	61920	(000000-)	Horn, Back-Up Alarm	1
▲▽	4	36438	(000000-)	Headlight Assy,210G	1
▲▲		36439	(000000-)	Bulb, 12V .9A 15	1
▲	5	24576-1	(000000-)	Bracket, Flasher	1
▲	6	24576	(000000-)	Flasher,12V.Ideal	1
▲	7	71544	(000000-)	Harness, Alarm, Backup	1
▲	8	56186	(000000-)	Relay, Shrouded, 12 VDC	1
▲	9	55248	(000000-)	Cabletie Mount, Adhesive	2
▲	10	49266	(000000-)	Tie, Cable 1.75D Max 7.50Lg	5
▲	11	57751	(000000-)	Boot, Circuit Breaker	1
▲	12	57803	(000000-)	Breaker-Circuit, 15A Resetable	1
▲	13	16931	(000000-)	Screw, Hex, M8 X 1.25 X 20, 8.8	4
▲	14	32491	(000000-)	Washer, Flat, 0.31, Std	4
▲	15	07791	(000000-)	Nut, Hex, Flng, M8 X 1.25	4
▲	16	10632-9	(000000-)	Grommet, Rbr, 0.63id, F/0.8h, .12 Matl	1

Fig. 11 - Overhead Guard Kit

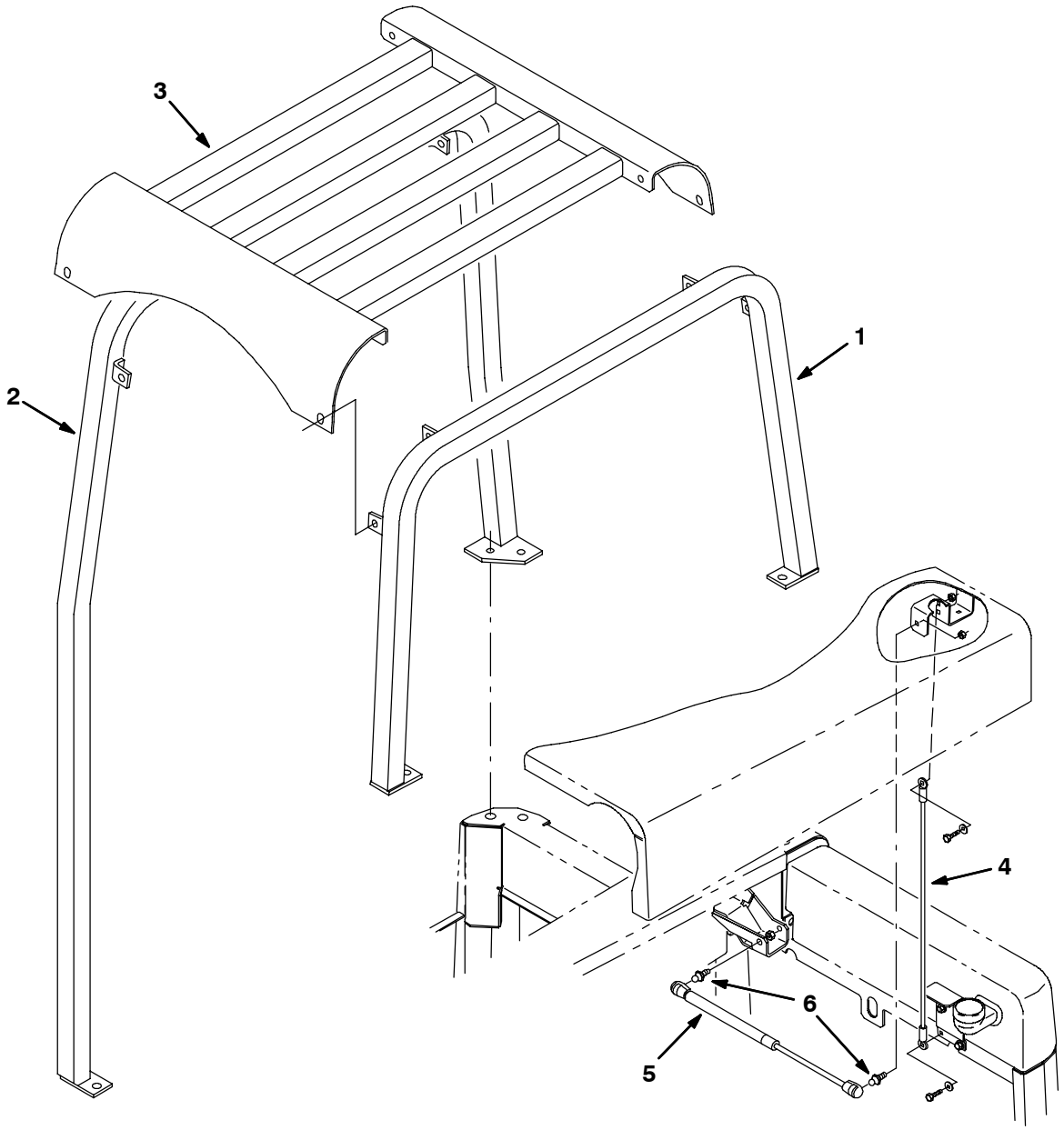

11187 - 8410, NA

	Ref.	Part No.	Serial Number	Description	Qty.
▽		83898	(000000-)	Guard Kit, Ohg	1
▲	1	73404	(000000-)	Tube, Leg, Ohg, Lh	1
▲	2	73408	(000000-)	Tube, Leg, Ohg, Rh	1
▲	3	73412	(000000-)	Guard Wldt, Oh, Top	1
▲	4	36192	(000000-)	Lanyard Assy	1
▲	5	84018	(000000-)	Spring, Gas 90Lb 5.98 Stroke	1
▲	6	58494	(000000-)	Stud, Ball, Gas Spring	2

Fig. 12 - Overhead Guard Kit, 87”

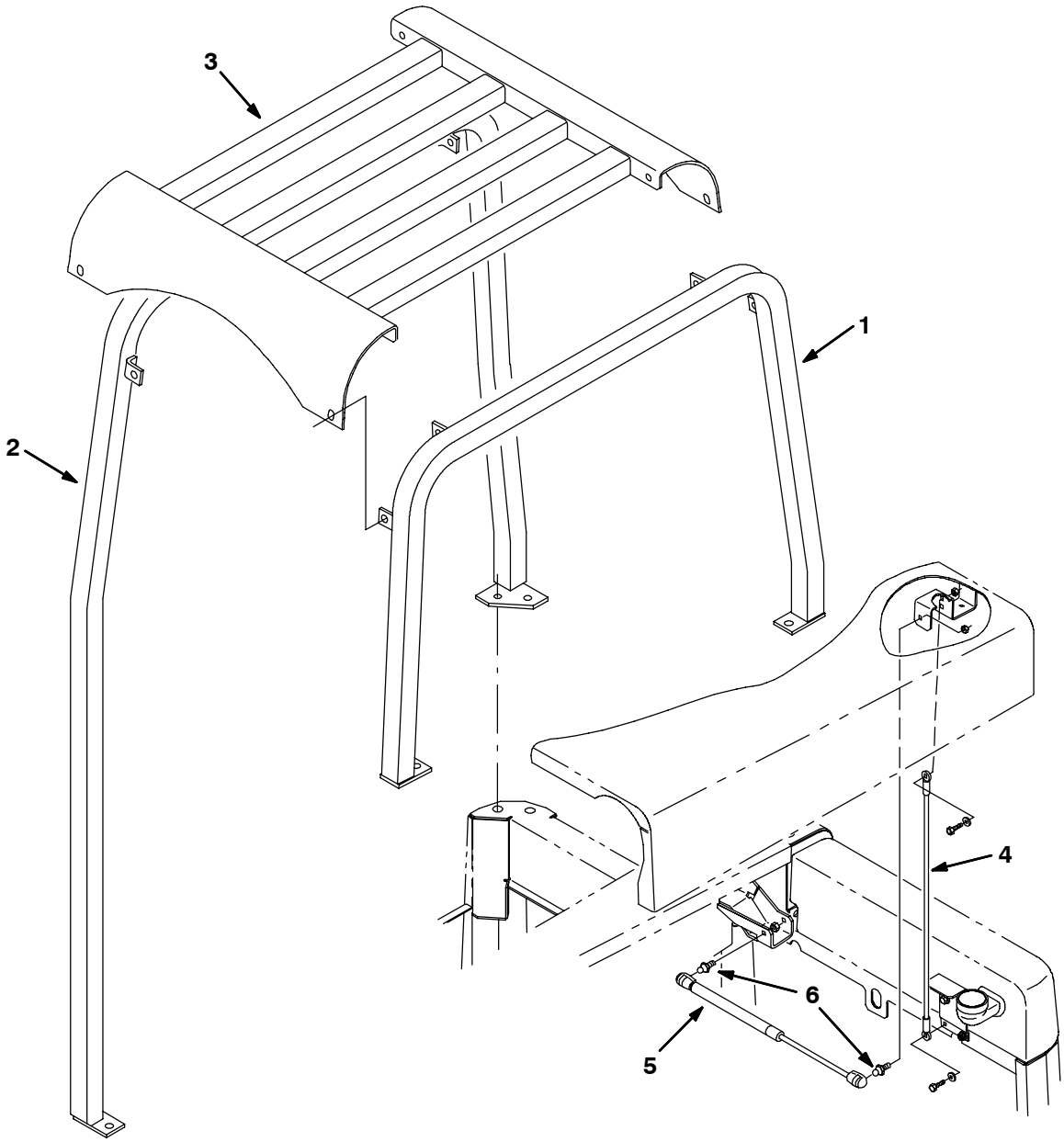

11195 - 8410, NA

	Ref.	Part No.	Serial Number	Description	Qty.
▽		84076	(000000-)	Guard Kit, Overhead, 87 Height	1
▲	1	22911	(000000-)	Tube Wldt, Leg, Ohg	1
▲	2	22912	(000000-)	Tube Wldt, Leg, Ohg, Lh	1
▲	3	73412	(000000-)	Guard Wldt, Oh, Top	1
▲	4	36192	(000000-)	Lanyard Assy	1
▲	5	84018	(000000-)	Spring, Gas 90Lb 5.98 Stroke	1
▲	6	58494	(000000-)	Stud, Ball, Gas Spring	2

Fig. 13 - Seat Kit

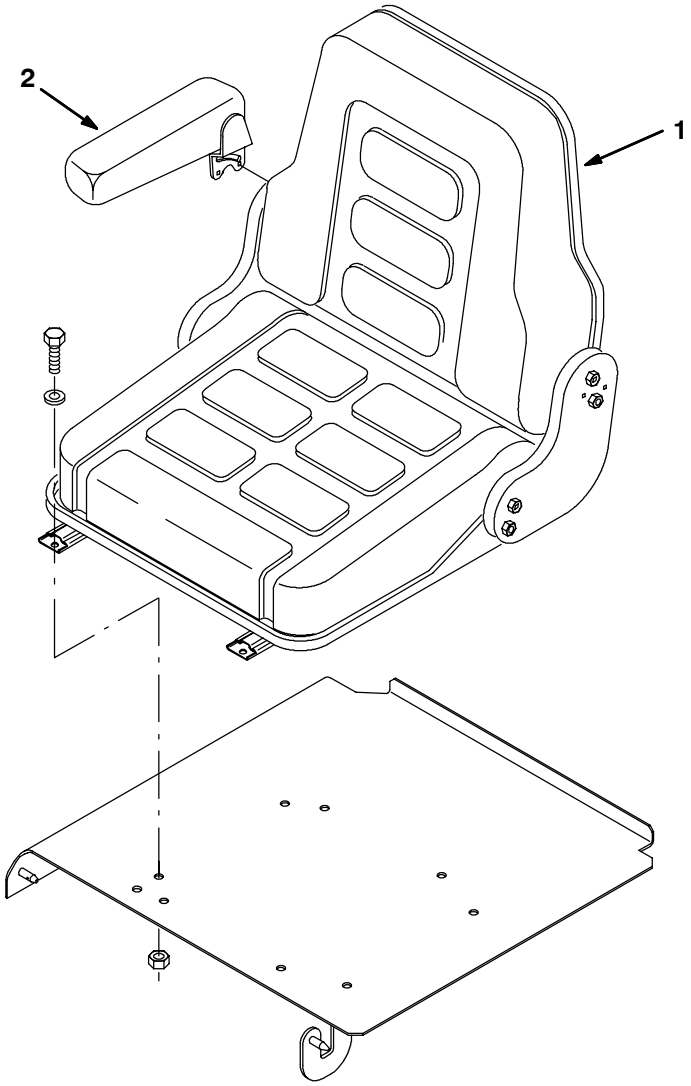

09106 - ALL

	Ref.	Part No.	Serial Number	Description	Qty.
▽		78981	(000000-)	Seat Kit, Grammer 8400/8410	1
▲	1	53845	(000000-)	Seat, Grammer	1
▲	2	71477	(000000-)	Armrest Assy, Rh	1

Fig. 14 - Seat Mounting Bracket Kit

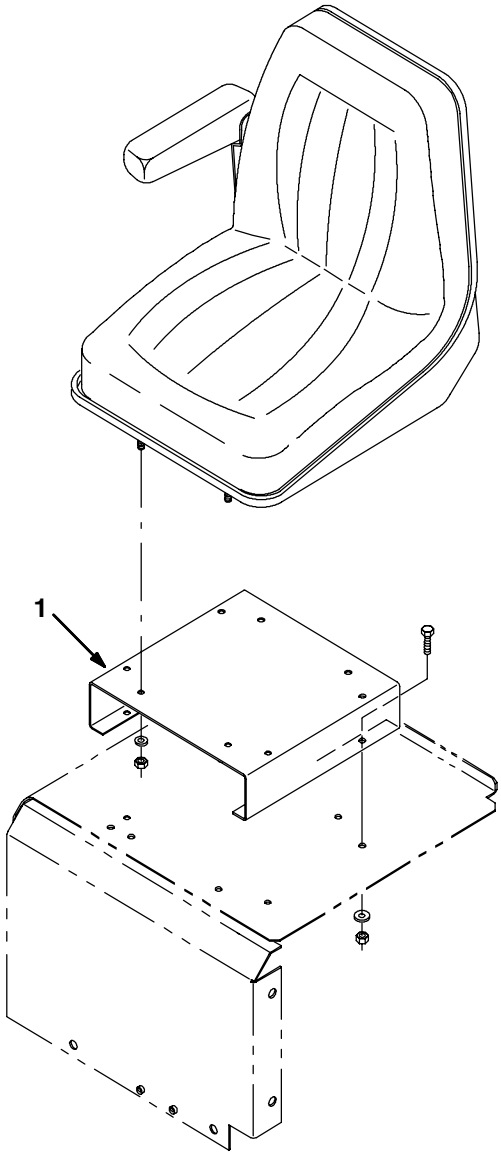

10234 - ALL

	Ref.	Part No.	Serial Number	Description	Qty.
▽		10595	(000000-)	Bracket, Mounting, Seat Kit	1
▲	1	10581	(000000-)	Bracket, Mounting, Seat	1

Fig. 15 - Seat Belt Kit

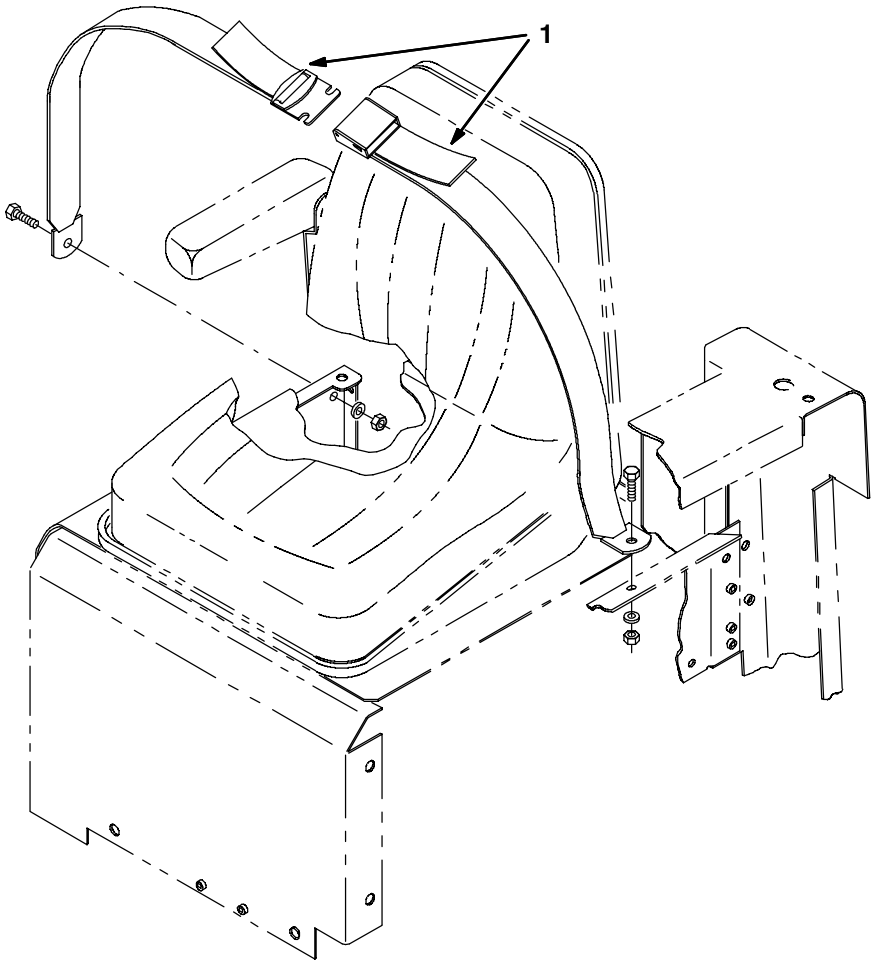

09108 - ALL

	Ref.	Part No.	Serial Number	Description	Qty.
▽		78985	(000000-)	Seat Belt Kit 8400/8410	1
▲	1	30533	(000000-)	Seat Belt	1

Fig. 16 - Fire Extinguisher Kit

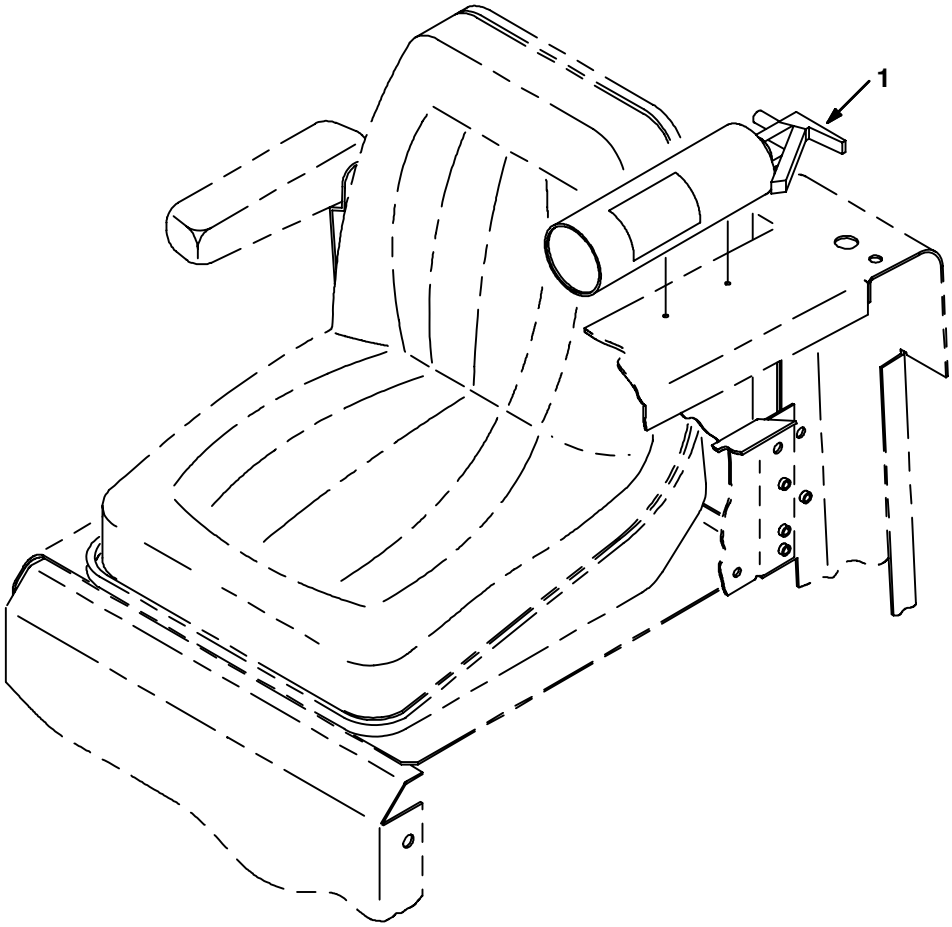

09104 - ALL

	Ref.	Part No.	Serial Number	Description	Qty.
▽		78987	(000000-)	Extinguisher Kit Fire 8400/8410	1
▲	1	25312	(000000-)	Extinguisher, Fire	1

Fig. 17 - Spark Arresting Muffler Group

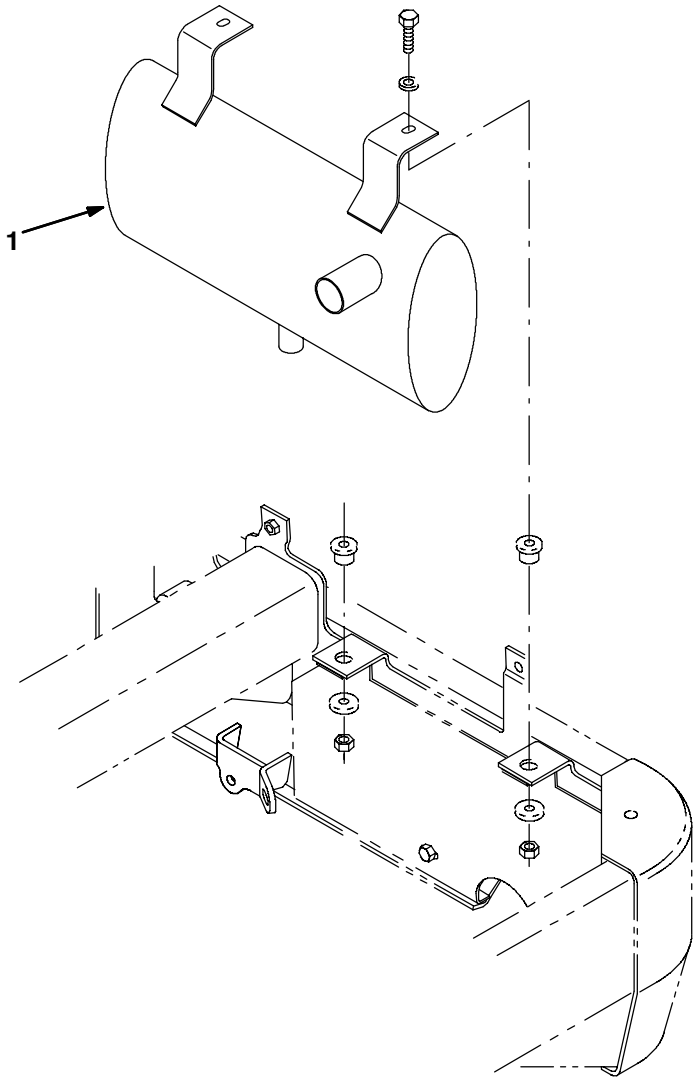

11199 - ALL

Ref.	Part No.	Serial Number	Description	Qty.
1	84007	(000000-)	Muffler, Spark Arresting	1

Fig. 18 - Protectoseal Fuel Tank Cap Group

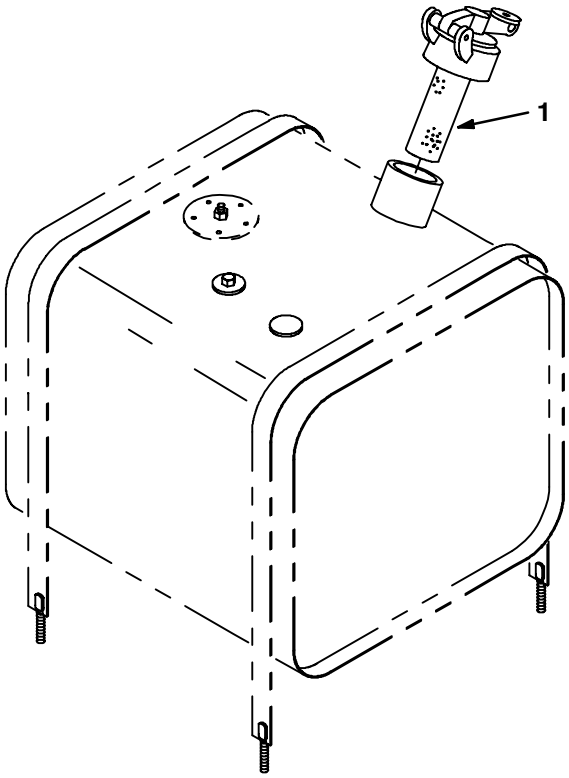

07471 - ALL

Ref.	Part No.	Serial Number	Description	Qty.
1	02506-6	(000000-)	Gas Cap, Protectoseal	1

Fig. 19 - Squeegee Wand Kit

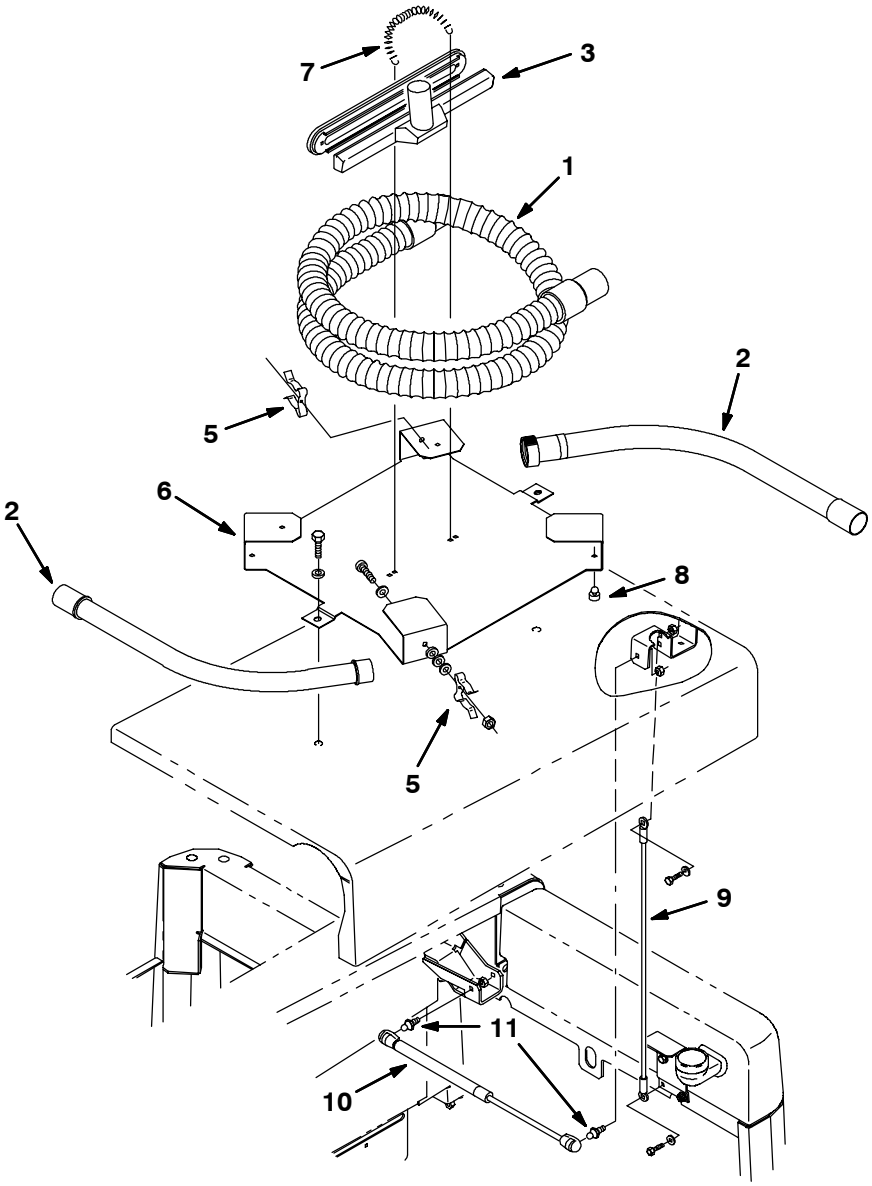

11193 - ALL

	Ref.	Part No.	Serial Number	Description	Qty.
▽		84071	(000000-)	Squeegee Wand Kit 8410	1
▲	1	78808	(000000-)	Hose, Vacuum	1
▲	2	63448	(000000-)	Wand, Metal - 2PC	1
▲	3	63451	(000000-)	Nozzle, Plastic Wand 14.OLG	1
▲	4	63430	(000000-)	Shoe, Plastic-Squeegee 14IN	1
▲	5	67004	(000000-)	Clip-Finger Grip	4
▲	6	77322	(000000-)	Panel, MTG, Hose	1
▲	7	50304	(000000-)	Spring, EXT	1
▲	8	51787	(000000-)	Bumper, Rubber	4
▲	9	36192	(000000-)	Lanyard Assy	1
▲	10	84018	(000000-)	Spring, Gas 90Lb 5.98 Stroke	1
▲	11	58494	(000000-)	Stud, Ball, Gas Spring	2

Fig. 20 - Positive Solution Control Drain System Kit Std

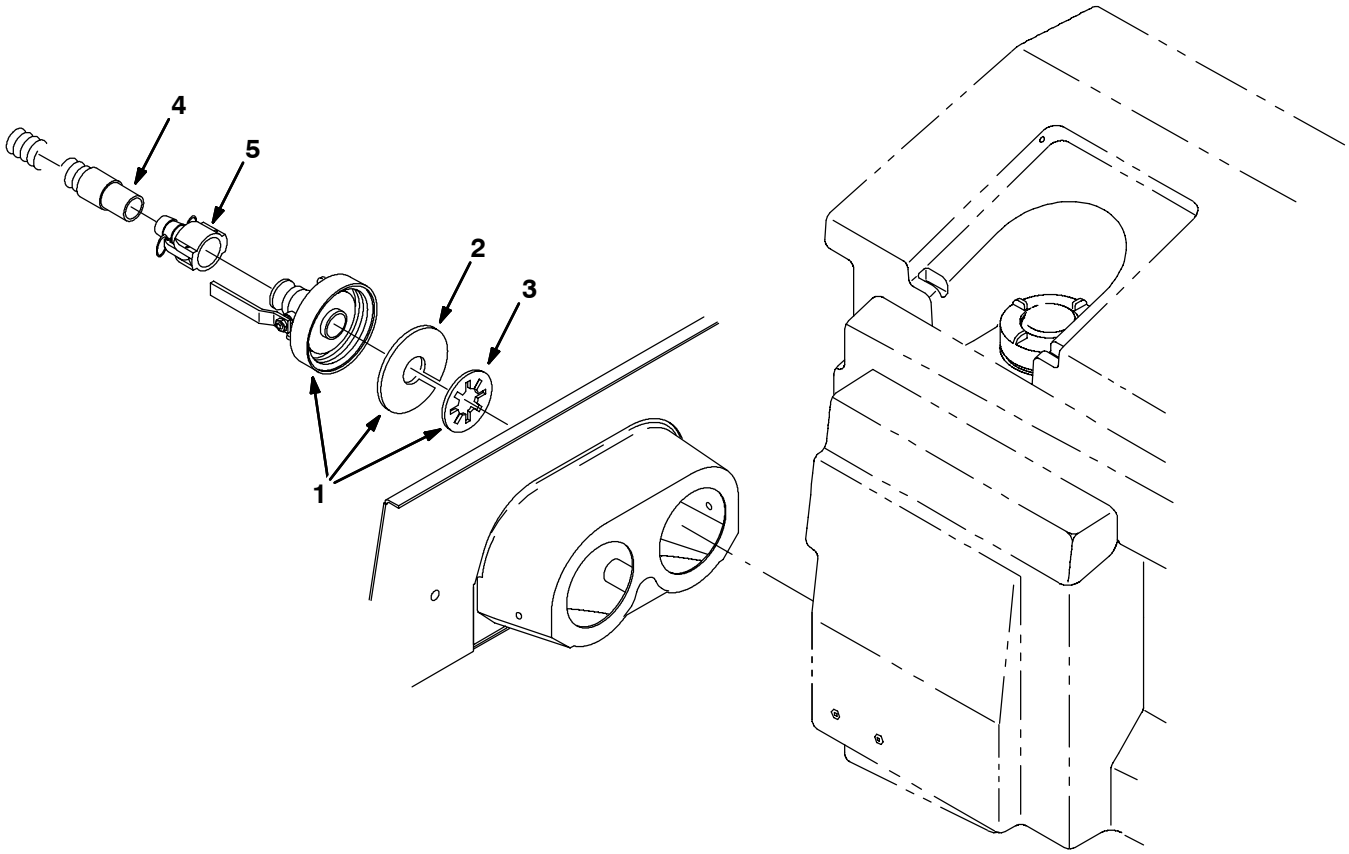

11189 - ALL

	Ref.	Part No.	Serial Number	Description	Qty.
▽		48742	(000000-)	Pos Sol Control Drain Sys Kits	1
▲▽	1	48739	(000000-)	Cap Assy, Pos Drain	1
▲▲		23456	(000000-)	Cap, Drain	1
▲▲		375014	(000000-)	Kit, Valve Handle	1
▲▲	2	1031700	(000000-)	Gasket, 2.00id 5.38od .19 [Buna]	1
▲▲	3	20932	(000000-)	Washer, Poly	1
▲	4	75635AM	(000000-)	Hose Assy, W/1cuff, 1.5d 120l 1.5/	1
▲	5	48734	(000000-)	Coupler, Female X Hose Shank	1

Fig. 21 - Positive Solution Control Drain System Kit ES

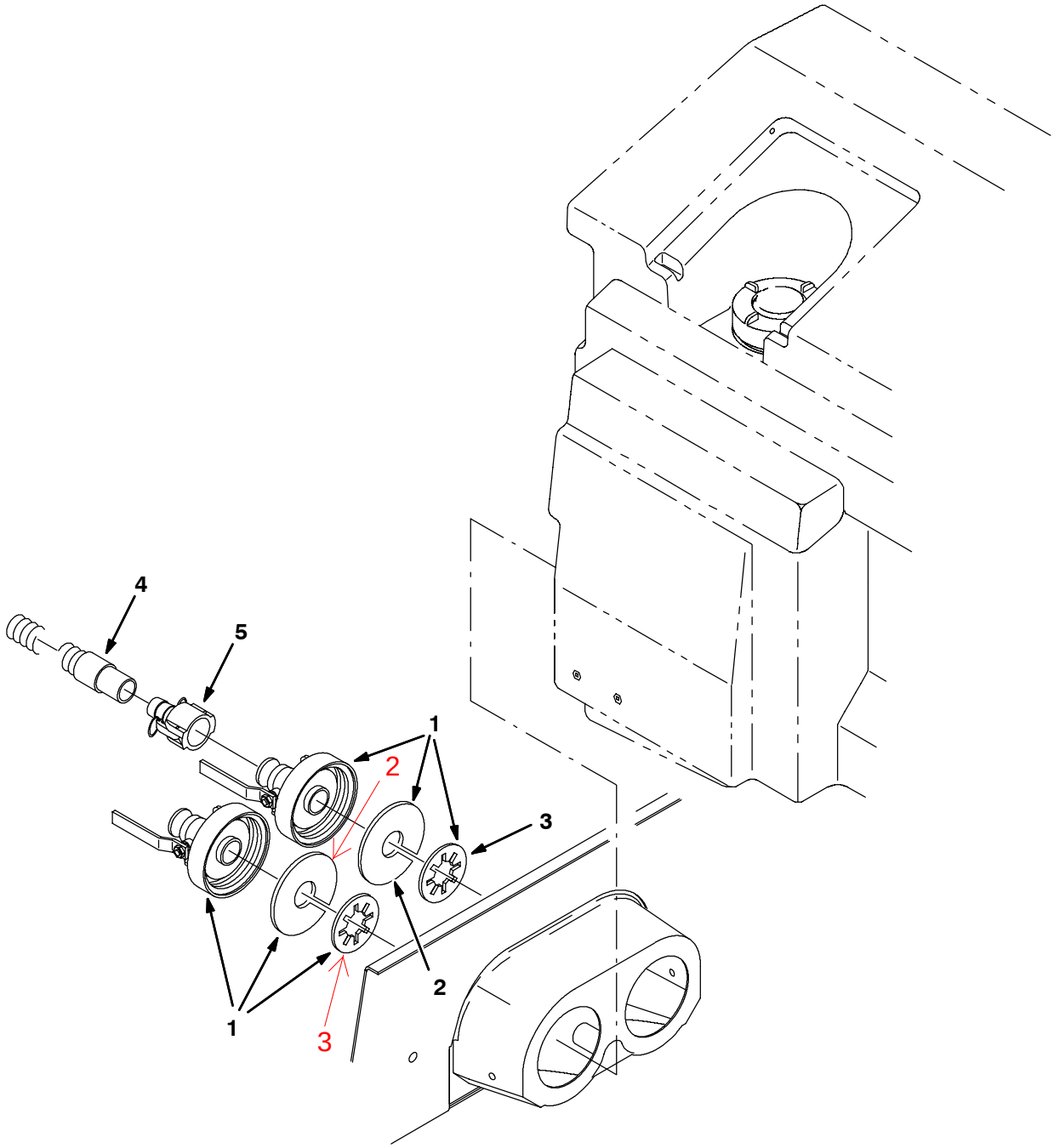

11191 - ALL

	Ref.	Part No.	Serial Number	Description	Qty.
▽		48743	(000000-)	Pos Sol Ctrl Drain Sys Kit Es	1
▲▽	1	48739	(000000-)	Cap Assy, Pos Drain	2
▲▲		23456	(000000-)	Cap, Drain	1
▲▲		375014	(000000-)	Kit, Valve Handle	1
▲▲	2	1031700	(000000-)	Gasket, 2.00id 5.38od .19 [Buna]	~~1~~ 2
▲▲	3	20932	(000000-)	Washer, Poly	~~1~~ 2
▲	4	75635AM	(000000-)	Hose Assy, W/1cuff, 1.5d 120l 1.5/	1
▲	5	48734	(000000-)	Coupler, Female X Hose Shank	1

Fig. 22 - Vacuumized Skirt Kit, Main Brush

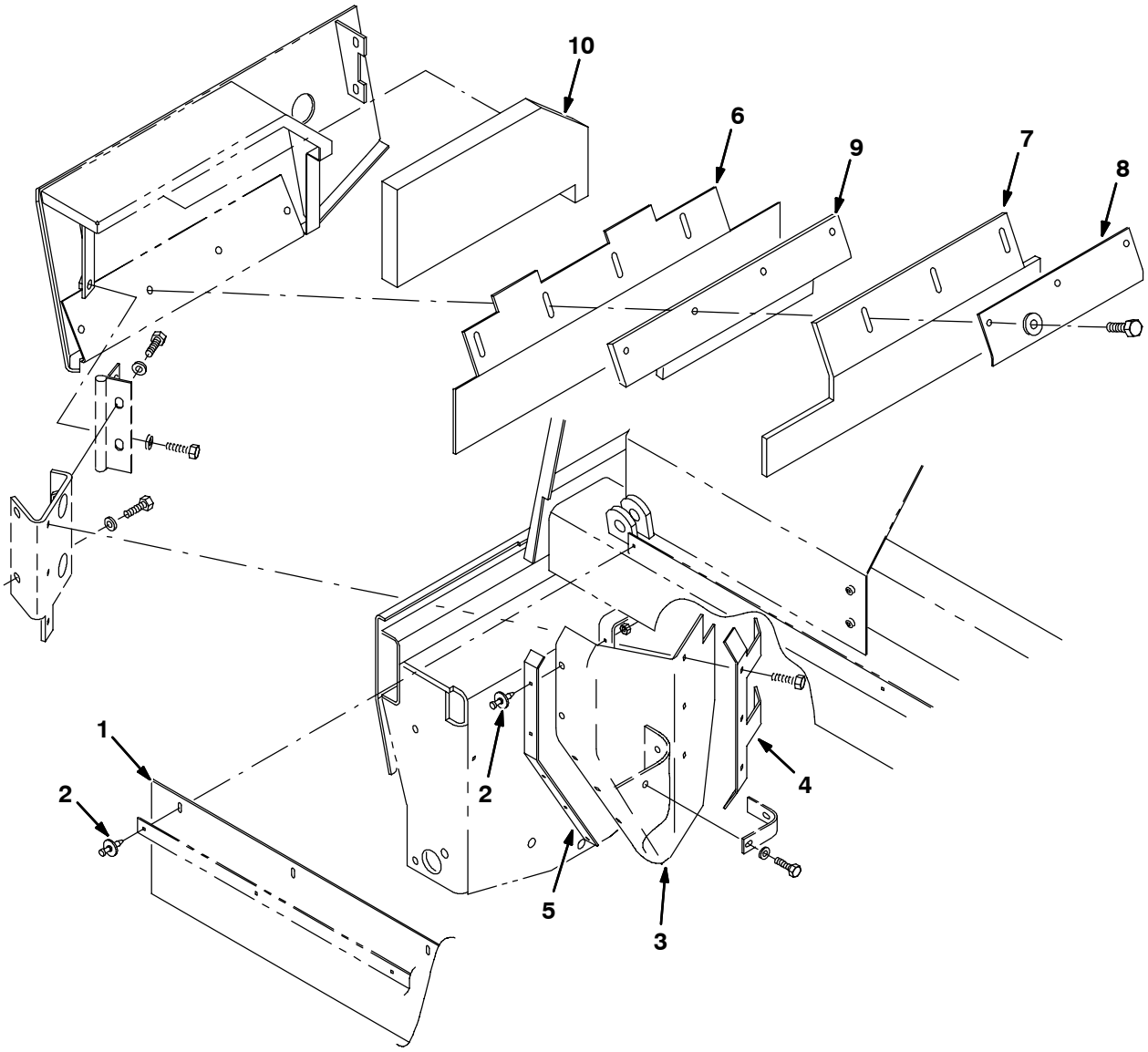

10193 - ALL

	Ref.	Part No.	Serial Number	Description	Qty.
▽		70229	(000000-)	Vacuumized Skirt Kit, Main Bru	1
▲	1	56872	(000000-)	Skirt, Hopper, Top	1
▲	2	72968	(000000-)	Rivet, Plastic .250x.898	15
▲	3	70230	(000000-)	Skirt, Deflection, Vac Kit	2
▲	4	70227	(000000-)	Strap, Deflector, Rh	1
▲		70228	(000000-)	Strap, Deflector, Lh (Not Shown)	1
▲	5	56914	(000000-)	Strap	2
▲	6	70222	(000000-)	Skirt, Brush Door, Outer	2
▲	7	70223	(000000-)	Skirt, Brush Door, Inner	2
▲	8	70224	(000000-)	Strip, Retainer	2
▲	9	374568	(000000-)	Angle, Filler Plate	2
▲	10	70226	(000000-)	Seal, Foam, Door	2

Fig. 23 - Side Brush Dust Control Kit

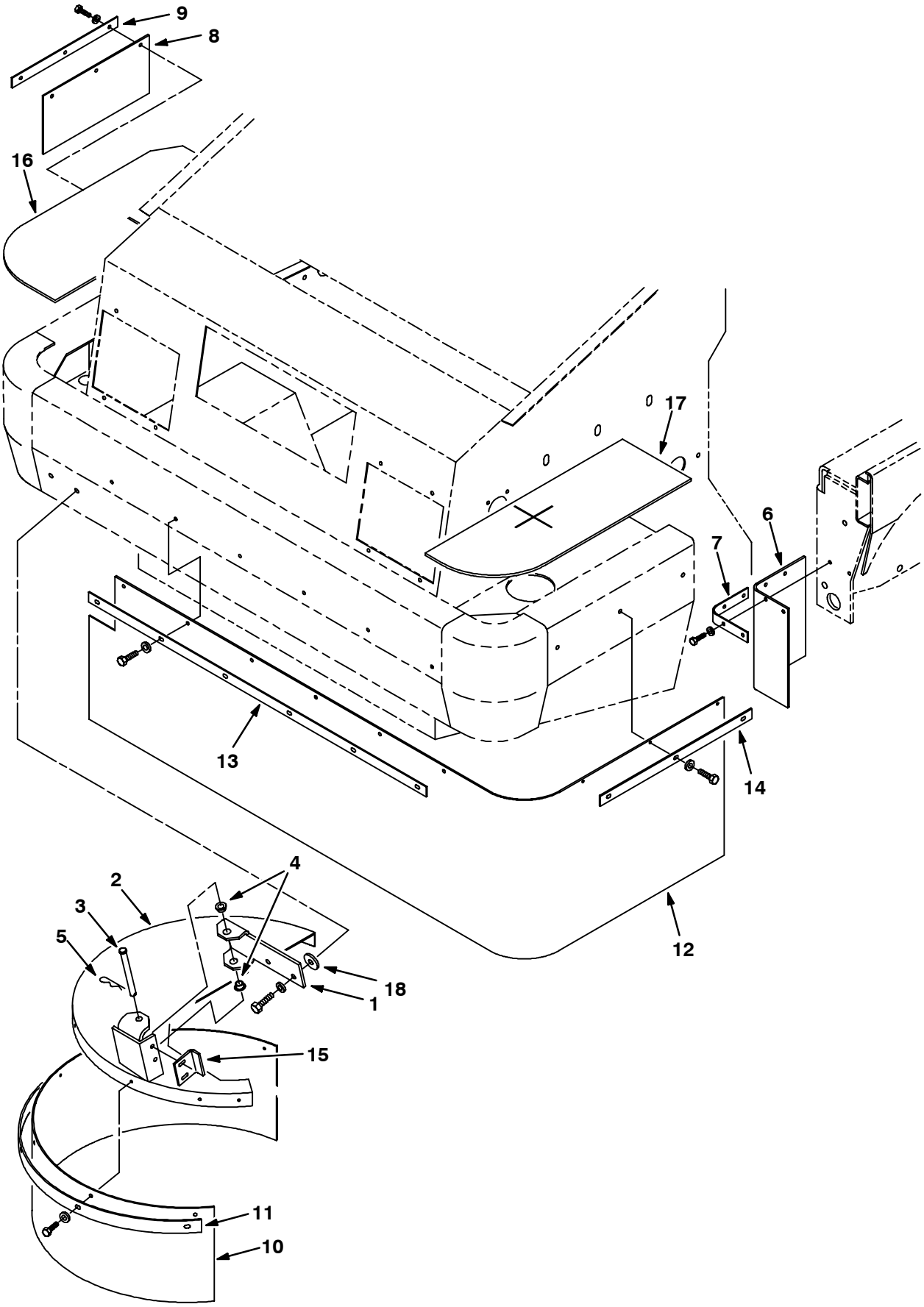

08904 - ALL

Fig. 23 - Side Brush Dust Control Kit

	Ref.	Part No.	Serial Number	Description	Qty.
▽		78904	(000000-)	Dust Cont Kit S Br 8400	1
▲	1	74383	(000000-)	Bracket, Sbdc	1
▲	2	74375	(000000-)	Cover, Sbdc	1
▲	3	51538	(000000-)	Pin,Clevis,0.50 Dia.X 5.00 Lg	1
▲	4	23274	(000000-)	Bshg,Flange,0.50Bx0.62Odx0.40L	2
▲	5	44906	(000000-)	Pin,Hair Cotter #Lhcot-2,Leitk	1
▲	6	66176	(000000-)	Skirt, Wheel Pocket, Sbdc	2
▲	7	66177	(000000-)	Plate, Retainer, Wheel Pocket	2
▲	8	53576	(000000-)	Skirt, Sbdc, Rh	1
▲	9	53610	(000000-)	Plate, Retainer, Sbdc, Rh	1
▲	10	66178	(000000-)	Skirt, Cover, Sbdc	1
▲	11	66179	(000000-)	Plate, Retainer, Cover, Sbdc	1
▲	12	74379	(000000-)	Skirt, Front, Sbdc	1
▲	13	74380	(000000-)	Plate, Reainer, Front, Sbdc	1
▲	14	74381	(000000-)	Plate, Retainer, Front,Lh Sbdc	1
▲	15	74382	(000000-)	Angle, Stop	1
▲	16	72086	(000000-)	Foam, Sbdc, Rh	1
▲	17	72087	(000000-)	Foam, Sbdc, Lh	1
▲	18	35843	(000000-)	Washer, .530B 1.50D .19Hr	2

Fig. 24 - Right Hand Side Squeegee Guard Kit

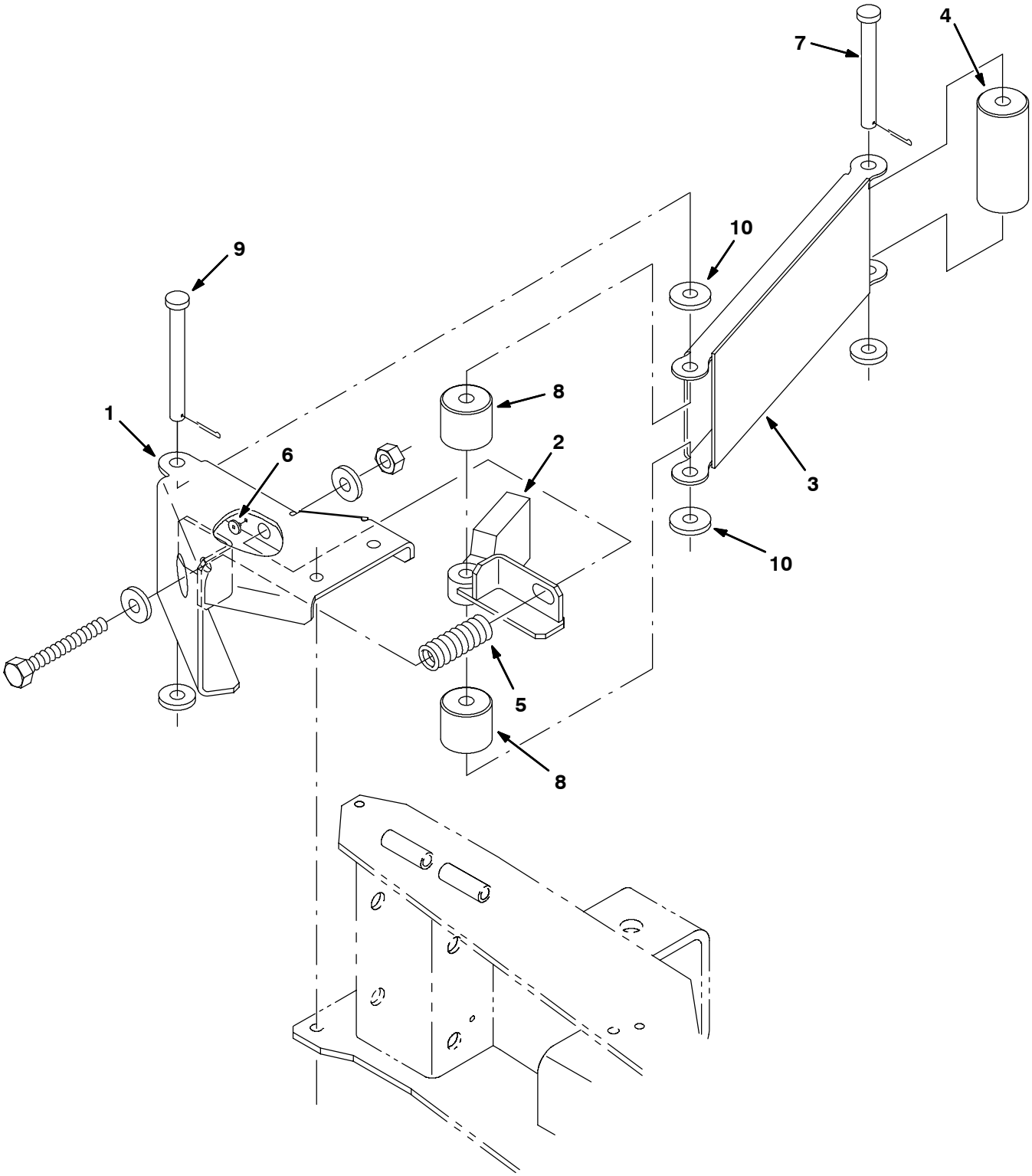

10240 - ALL

Fig. 24 - Right Hand Side Squeegee Guard Kit

	Ref.	Part No.	Serial Number	Description	Qty.
▽		10562	(000000-)	Side Squeegee Se Kit	1
▲	1	10550	(000000-)	Channel Wldt	1
▲	2	10557	(000000-)	Arm Wldt	1
▲	3	10560	(000000-)	Tube Wldt	1
▲	4	10561	(000000-)	Roller	1
▲	5	45261	(000000-)	Sprng,Comp,0.74Idx.11Wire 2.5L	1
▲	6	56855	(000000-)	Bumper,Rbr,W.Knurled Stud	1
▲	7	51538	(000000-)	Pin,Clevis,0.50 Dia.X 5.00 Lg	1
▲	8	72946	(000000-)	Roller 1.75	2
▲	9	51225	(000000-)	Pin,Clevis,0.50 Dia.X 5.50 Lg	1
▲	10	86860	(000000-)	Bearing, Thrust .500	2

Fig. 25 - Machine Transport Kit

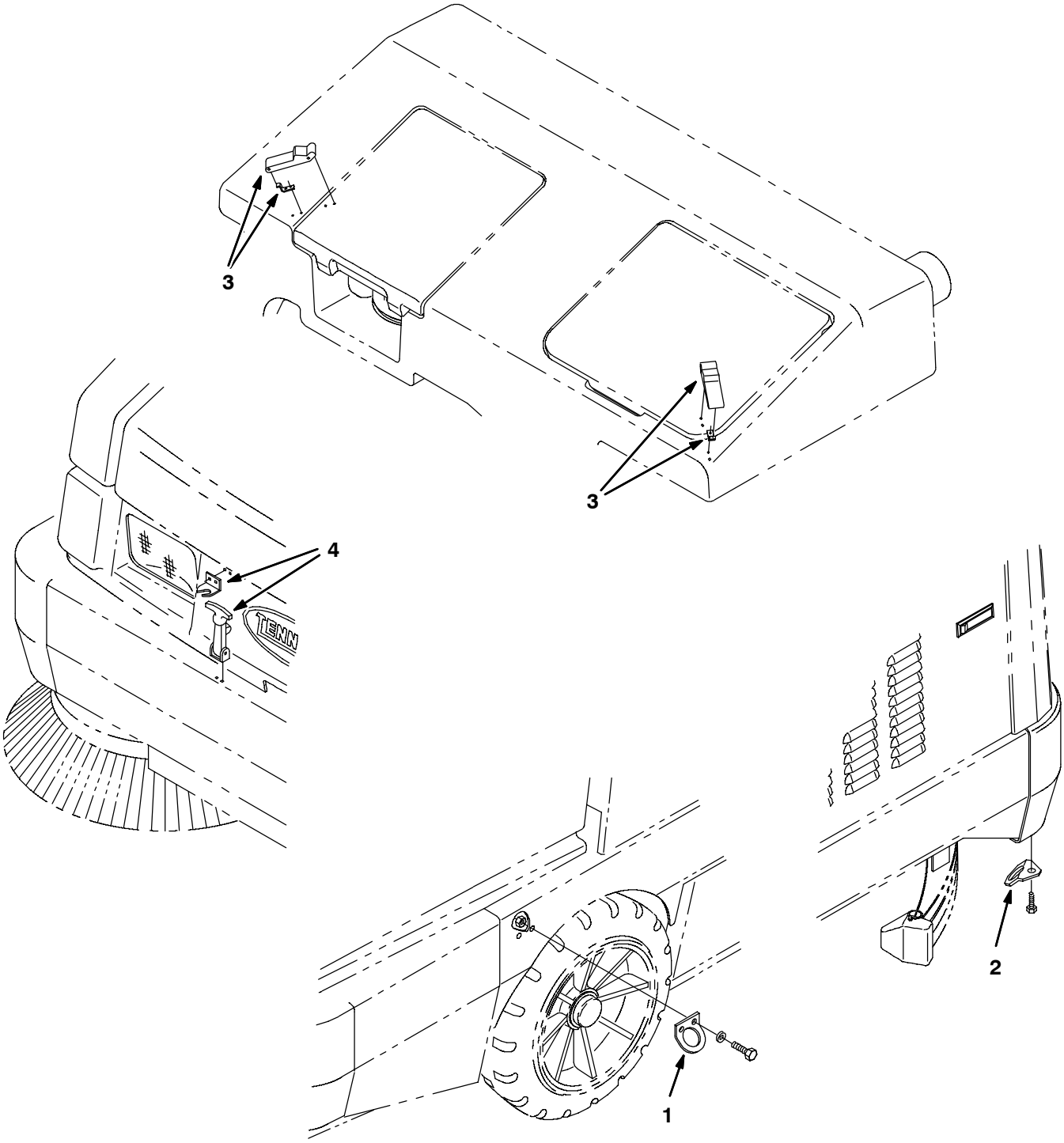

11197 - ALL

Fig. 25 - Machine Transport Kit

Ref.	Part No.	Serial Number	Description	Qty.
1	82196	(000000-)	Bracket,Rear Tiedown	2
2	14983	(000000-)	Bracket Tie Down	2
3	49800	(000000-)	Latch, Elastic	2
4	11636	(000000-)	Latch, Draw, Flexible	1

Fig. 26 - LPG Tank Mount Kit, 43 lb

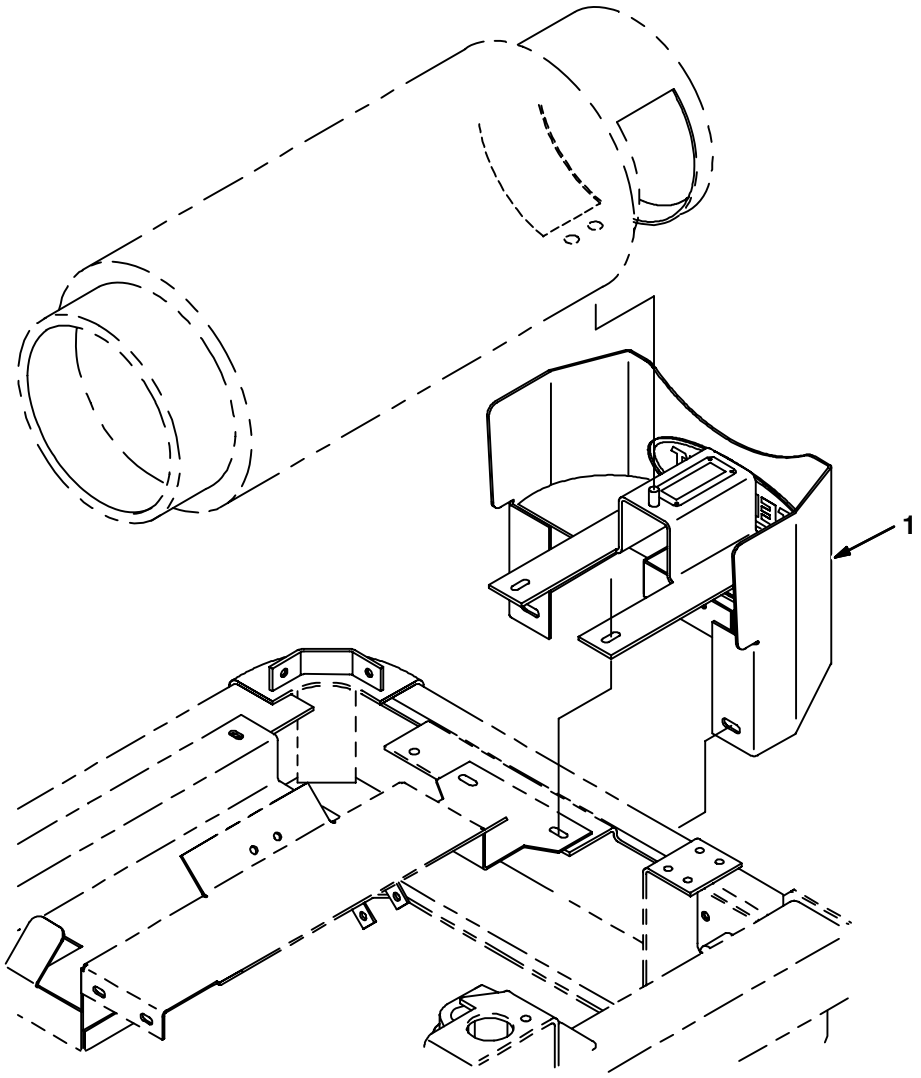

09102 - 8410, LP

	Ref.	Part No.	Serial Number	Description	Qty.
▽		78983	(000000-)	Tank Kit, Lpg, 43# 8400/8410	1
▲	1	78942	(000000-)	Bracket Assy, Lpg Tank W/Label	1

Fig. 27 - Heavy Duty Engine Air Filter Kit

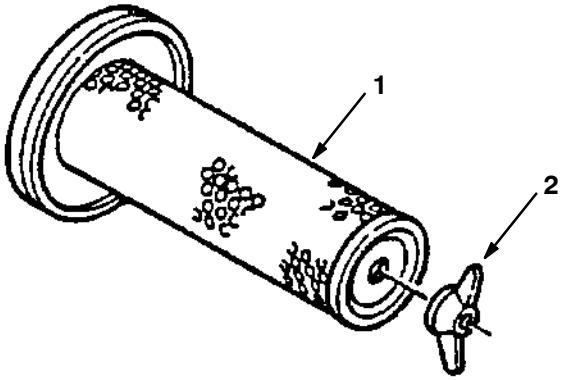

04712 - ALL

	Ref.	Part No.	Serial Number	Description	Qty.
▽		07565	(000000-)	Kit, Air Filter, Engine	1
▲	1	58121	(000000-)	Element, Safety	1
▲	2	07562	(000000-)	Wingnut	1

Fig. 28 - Sight Gauge Kit

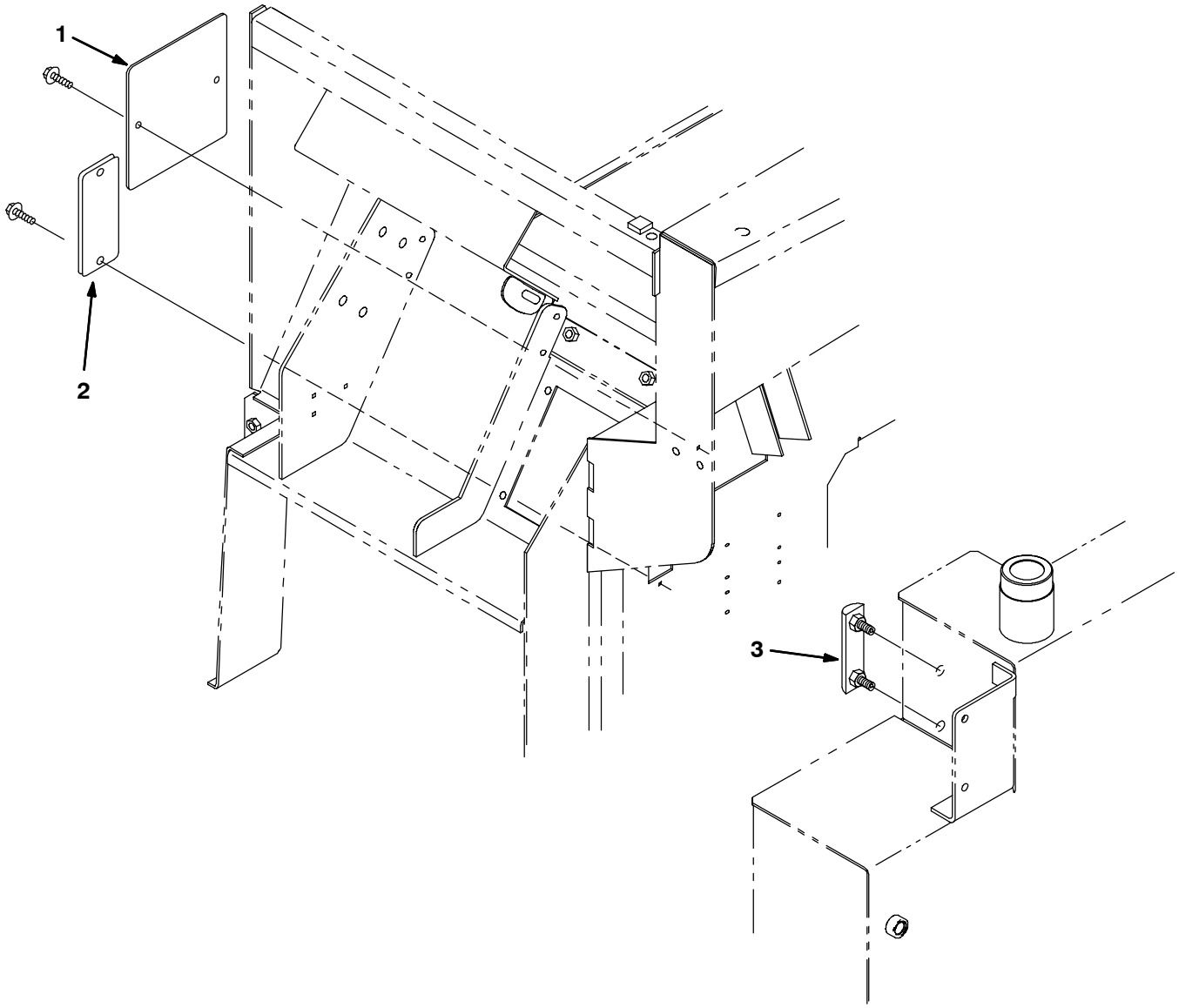

350496 - ALL

Ref.	Part No.	Serial Number	Description	Qty.
	84112	(000000-)	Gage Kit, Hyd Tank	1
1	83822	(000000-)	Cover, Brush Press Linkage	1
2	22746	(000000-)	Pane, Acrylic	1
3	65215	(000000-)	Gauge, Sight Lh	1

Fig. 29 - Solid Turf Tire and Wheel Assembly

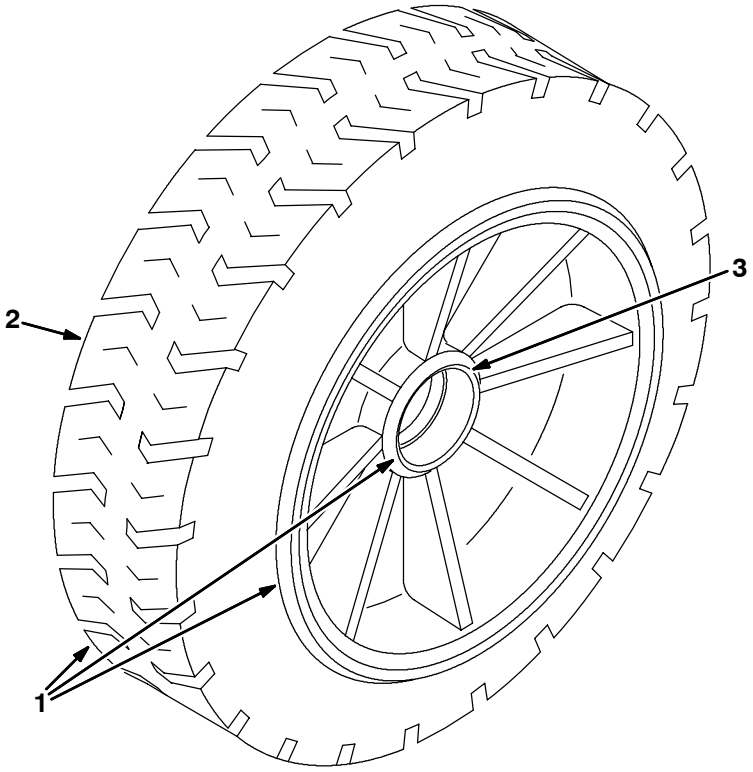

352366 - ALL

	Ref.	Part No.	Serial Number	Description	Qty.
▽	1	374605	(000000-)	Tire & Wheel Assy, Solid Turf 18X7	1
▲	2	374604	(000000-)	Tire, Solid 18X7X12.12 Turf	1
▲	3	51338AM	(000000-)	Bearing, Cup, 2.56Dia 0.55W	2

Fig. 30 - Solid Non Marking Turf Tire and Wheel Assembly

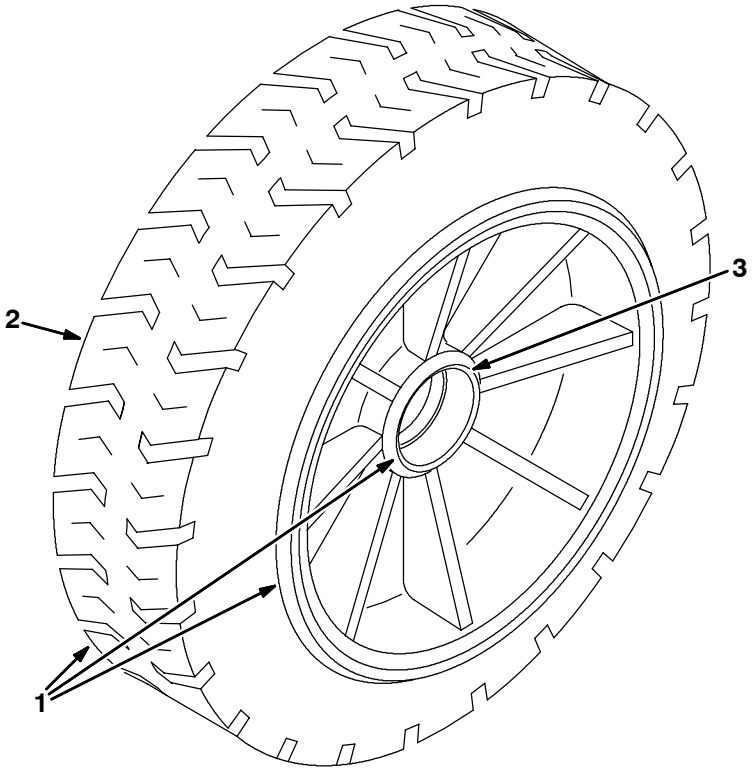

352366 - ALL

	Ref.	Part No.	Serial Number	Description	Qty.
▽	1	374689	(000000-)	Tire & Wheel Assy, Solid Non Marking Turf 18X7	1
▲	2	374688	(000000-)	Tire, Solid 18X7X12.12 Turf, Non Marking	1
▲	3	51338AM	(000000-)	Bearing, Cup, 2.56Dia 0.55W	2

Fig. 31 - Solid Non Marking Tire and Wheel Assembly

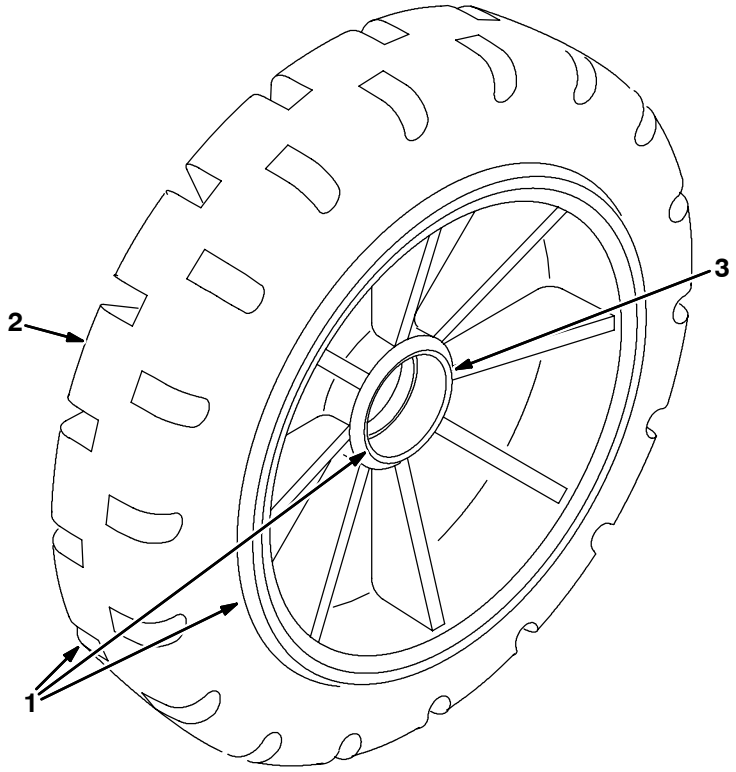

352368 - ALL

	Ref.	Part No.	Serial Number	Description	Qty.
▽	1	374608	(000000-)	Tire & Wheel Assy, Solid Nonmark	1
▲	2	374607	(000000-)	Tire, Solid 18X5X12.12 Nonmark	1
▲	3	51338AM	(000000-)	Bearing, Cup, 2.56Dia 0.55W	2

Fig. 32 - Documentation Group

Ref.	Part No.	Serial Number	Description	Qty.
1	MM390	(000000-)	Manual Pkg 8410	1
2	21791	(000000-)	Service Manual, Lrg 423 Fd (2.3L Engine)	1
2	385439	(000000-)	Service Manual, Lrg 425 Fd (2.5L Engine)	1
2	393223	(000000-)	Manual, Eng Service, Gm 3.0 L	1
3	MM392	(000000-)	Service Manual Pkg 8410	1
4	84078	(000000-)	Tape, Video, Operator, 8410	1
5	MM390ES	(000000-)	Operator Manual, Es	1
6	MM390FR	(000000-)	Operator manual, Fr	1
7	330710	(000000-)	Manual, CD-Rom, Oprts&Parts, All (NA)	1

SECTION 4

Contents **Page**

Fig. 1 – Hydraulic Motor Breakdown, 74162 4-2
Fig. 2 – Hydraulic Motor Breakdown, 22604 4-4
Fig. 3 – Hydraulic Motor Breakdown, 53435 4-6
Fig. 4 – Hydraulic Motor Breakdown, 373340 . . . 4-8
Fig. 5 – Hydraulic Motor Breakdown, 73090 . . . 4-10
Fig. 6 – Hydraulic Motor Breakdown, 73098 . . . 4-12
Fig. 7 – Hydraulic Motor Breakdown, 73112 . . . 4-13
Fig. 8 – Hydraulic Motor Breakdown, 84009 . . . 4-14
Fig. 9 – Hydraulic Motor Breakdown, 74468 . . . 4-15
Fig. 10 – Hydraulic Steering Valve Breakdown, 73093 4-16
Fig. 11 – Hydraulic Piston Pump Breakdown, 373486 4-18
Fig. 12 – Hydraulic Pump Breakdown, 73101 . . . 4-20
Fig. 13 – Hydraulic Pump Breakdown, 73102 . . . 4-22
Fig. 14 – Hydraulic Pump Breakdown, 79770 . . . 4-24
Fig. 15 – Hydraulic Piston Pump Breakdown, 373485 4-26
Fig. 16 – Hydraulic Solenoid Valve Breakdown, 84011 4-28
Fig. 17 – Hydraulic Solenoid Valve Breakdown, 84012 4-30
Fig. 18 – Hydraulic Solenoid Valve Breakdown, 84010 4-32
Fig. 19 – Hydraulic Solenoid Valve Breakdown, 1032232 4-34
Fig. 20 – Extended Scrub Pump Breakdown, 379001 4-36
Fig. 21 – Extended Scrub Pump Breakdown, 20891 4-38
Fig. 22 – Extended Scrub Pump Breakdown, 1021210 4-40
Fig. 23 – Hydraulic Flow Sensor Switch Breakdown, 73430 4-42
Fig. 24 – Metering Solution Pump Breakdown, 73260 4-43
Fig. 25 – LPG EFI Breakdown, 371894 4-44
Fig. 26 – LPG EFI Breakdown, 371895 4-46
Fig. 27 – Gasoline EFI Breakdown, 371896 4-48
Fig. 28 – Gasoline EFI Breakdown, 371897 4-50

Fig. 1 - Hydraulic Motor Breakdown, 74162

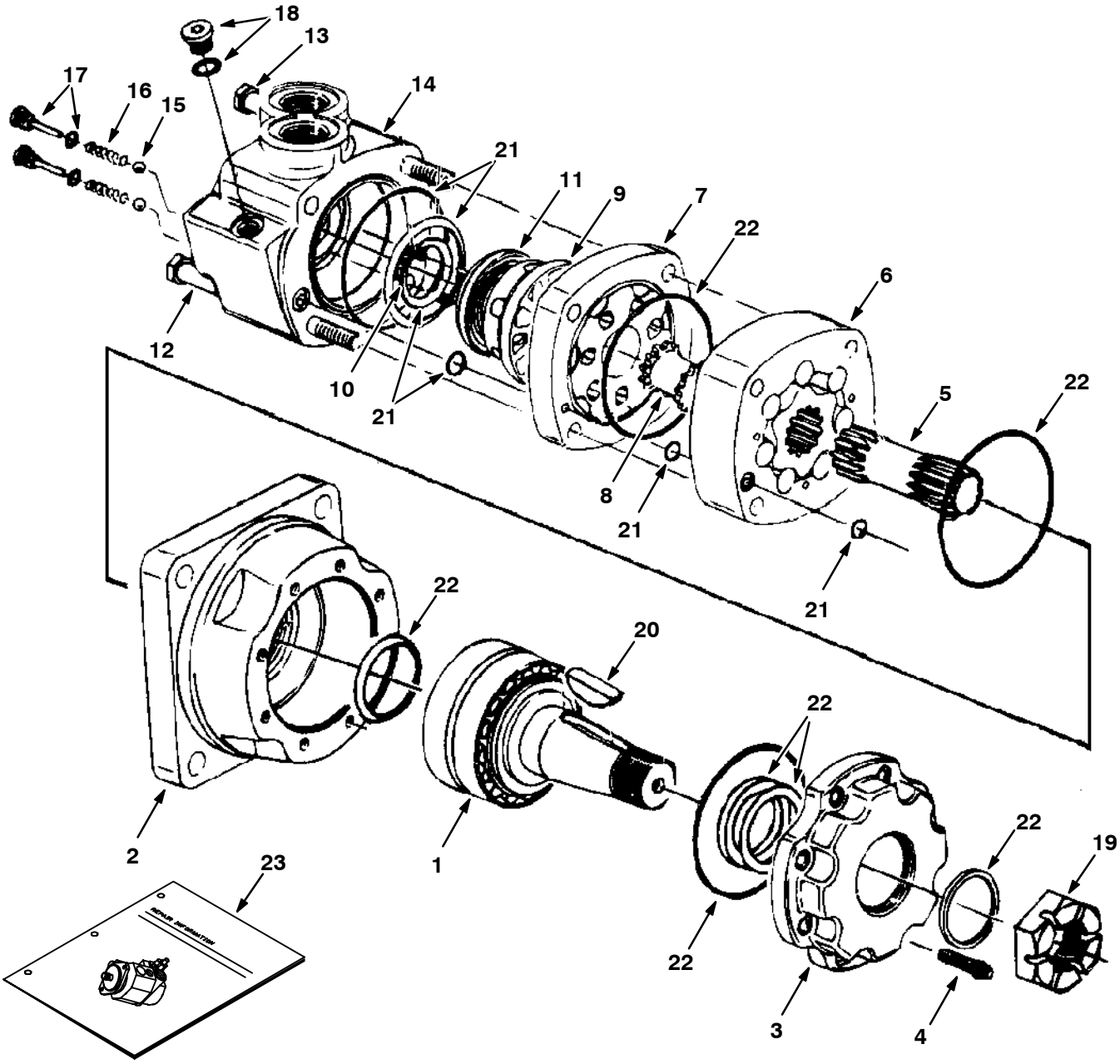

09612-09670 - ALL

Fig. 1 - Hydraulic Motor Breakdown, 74162

	Ref.	Part No.	Serial Number	Description	Qty.
▽		74162	(000000-)	Motor, Hyd Gear In 19.0	1
▲	1	74165	(000000-)	Shaft, Assy Cl	1
▲	2	74166	(000000-)	Housing, Brg Cl	1
▲	3	74167	(000000-)	Retainer, Frt Cl	1
▲	4	74168	(000000-)	Screw, Cap Cl	8
▲	5	37616	(000000-)	Drive	1
▲	6	37756	(000000-)	Geroler	1
▲	7	74122	(000000-)	Plate, Valve	1
▲	8	52405	(000000-)	Valve	1
▲	9	74123	(000000-)	Valve Cl	1
▲	10	34178	(000000-)	Spring	2
▲	11	38968	(000000-)	Ring	1
▲	12	74125	(000000-)	Bolt Cl	3
▲	13	38255	(000000-)	Bolt	1
▲	14	74171	(000000-)	Housing, Assy Cl	1
▲	15	37766	(000000-)	Ball	2
▲	16	34179	(000000-)	Spring	2
▲	17	74137	(000000-)	Plug Assembly Cl	2
▲	18	74098	(000000-)	Plug Assembly Ph	1
▲	19	45622	(000000-)	Nut	1
▲	20	45623	(000000-)	Key	1
▲	21	33580	(000000-)	Seal Kit, Rear	1
▲	22	79828	(000000-)	Seal Kit, Shaft Cl	1
	23	74249	(000000-)	Repair Info. Cl	1

Fig. 2 - Hydraulic Motor Breakdown, 22604

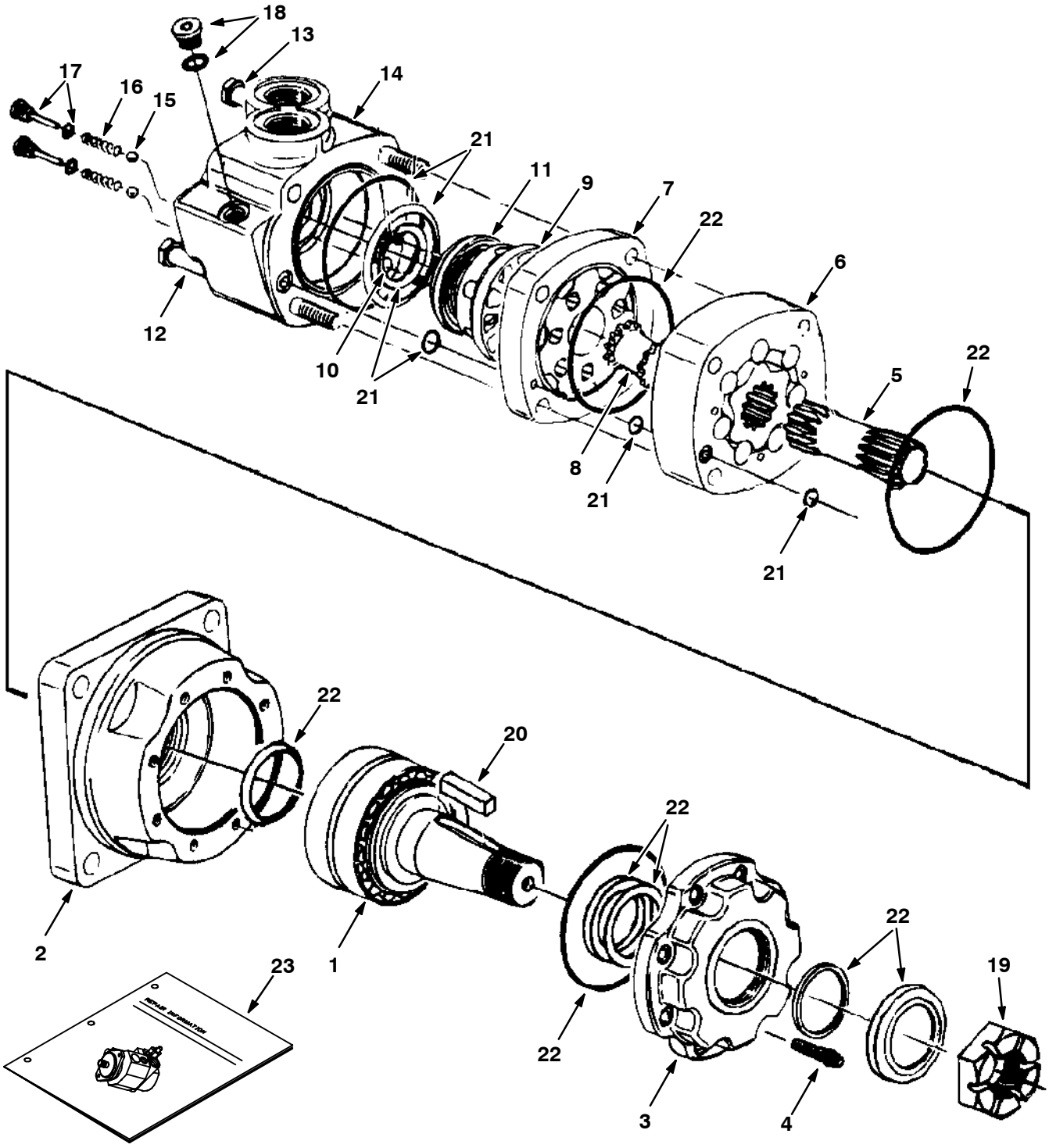

350628-09670 - ALL

Fig. 2 - Hydraulic Motor Breakdown, 22604

	Ref.	Part No.	Serial Number	Description	Qty.
▽		22604	(000000-)	Motor, Hyd Gear	1
▲	1	74165	(000000-)	Shaft S/A	1
▲	2	74166	(000000-)	Housing, Brg	1
▲	3	74167	(000000-)	Retainer, Frt	1
▲	4	74168	(000000-)	Screw, Cap	8
▲	5	37616	(000000-)	Drive	1
▲	6	37756	(000000-)	Geroler	1
▲	7	74122	(000000-)	Plate, Valve	1
▲	8	52405	(000000-)	Valve	1
▲	9	74123	(000000-)	Valve	1
▲	10	34178	(000000-)	Spring	2
▲	11	38968	(000000-)	Ring	1
▲	12	74125	(000000-)	Bolt	3
▲	13	38255	(000000-)	Bolt	1
▲	14	74171	(000000-)	Housing Assy,	1
▲	15	37766	(000000-)	Ball	2
▲	16	34179	(000000-)	Spring	2
▲	17	74137	(000000-)	Plug Assembly	2
▲	18	74098	(000000-)	Plug #4	1
▲	19	45622	(000000-)	Nut	1
▲	20	45623	(000000-)	Key	1
▲	21	33580	(000000-)	Seal Kit, Rear	1
▲	22	79828	(000000-)	Seal Kit, Shaft	1
▲	23	74249	(000000-)	Instr. Repair Info, Motor	1

Fig. 3 - Hydraulic Motor Breakdown, 53435

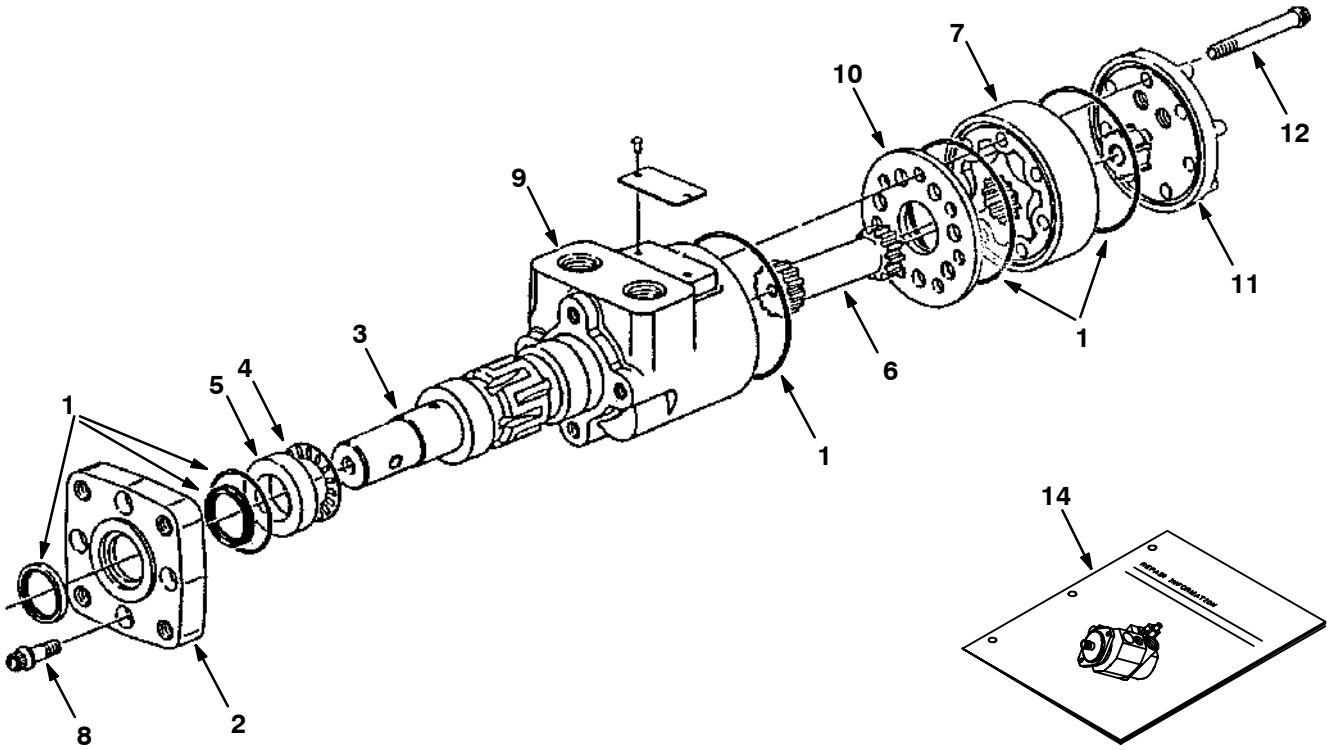

08926-09670-ALL

Fig. 3 - Hydraulic Motor Breakdown, 53435

	Ref.	Part No.	Serial Number	Description	Qty.
▽		53435	(000000-)	Motor, Hydraulic	1
▲	1	61490	(000000-)	Seal Kit	1
▲	2	31354	(000000-)	Flange, Mounting	1
▲	3	31373	(000000-)	Output Shaft	1
▲	4	45628	(000000-)	Bearing Thrust	1
▲	5	16695	(000000-)	Race, Thrust	1
▲	6	31377	(000000-)	Drive	1
▲	7	31384	(000000-)	Gerotor Set	1
▲	8	37555	(000000-)	Screw	4
▲	9	74100	(000000-)	Housing	1
▲	10	74094	(000000-)	Spacer Plate	1
▲	11	74101	(000000-)	End Cap	1
▲	12	22622	(000000-)	Screw, Cap	5
	13	74250	(000000-)	Repair Info.	1

Fig. 4 - Hydraulic Motor Breakdown, 373340

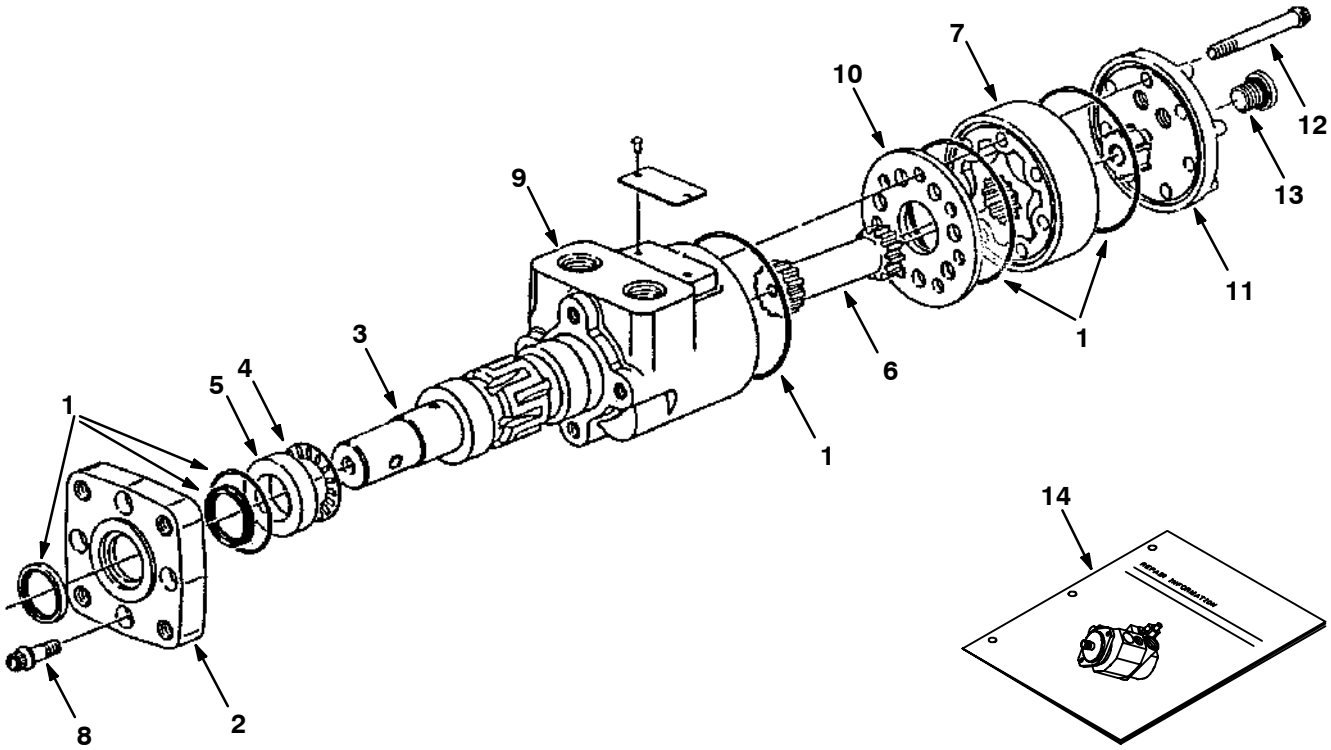

08926-09670-ALL

Fig. 4 - Hydraulic Motor Breakdown, 373340

	Ref.	Part No.	Serial Number	Description	Qty.
▽		373340	(000000-)	Motor, Hydraulic	1
▲	1	22654	(000000-)	Seal Kit	1
▲	2	31354	(000000-)	Flange, Mounting	1
▲	3	31373	(000000-)	Output Shaft	1
▲	4	45628	(000000-)	Bearing Thrust	1
▲	5	16695	(000000-)	Race, Thrust	1
▲	6	31377	(000000-)	Drive	1
▲	7	31384	(000000-)	Gerotor Set	1
▲	8	37555	(000000-)	Screw	4
▲	9	74100	(000000-)	Housing	1
▲	10	74094	(000000-)	Spacer Plate	1
▲	11	74101	(000000-)	End Cap	1
▲	12	22622	(000000-)	Screw, Cap	5
▲	13	74098	(000000-)	Plug	1
	14	74250	(000000-)	Repair Info.	1

Fig. 5 - Hydraulic Motor Breakdown, 73090

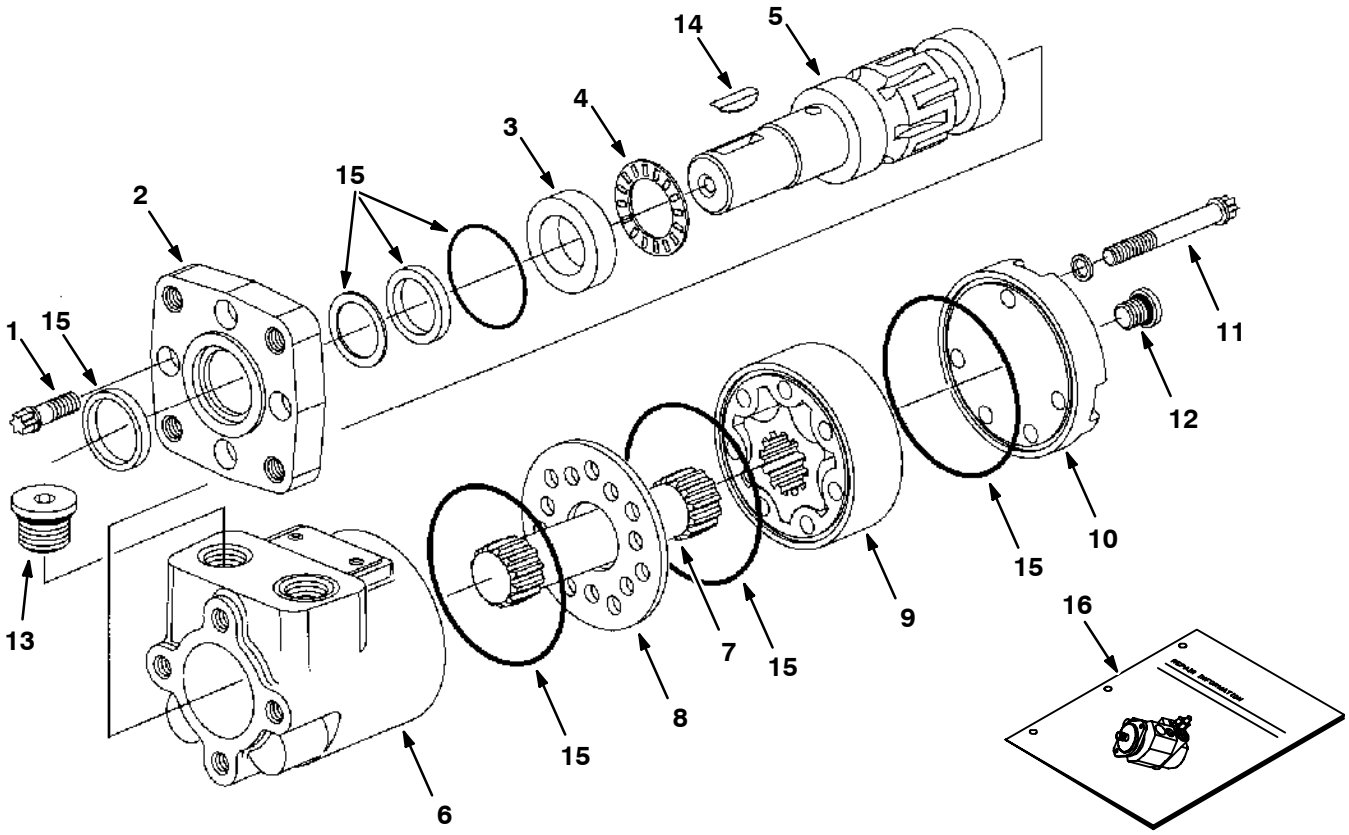

09610-09670 - ALL

Fig. 5 - Hydraulic Motor Breakdown, 73090

	Ref.	Part No.	Serial Number	Description	Qty.
▽		73090	(000000-)	Motor, Hyd Gear in 07.3 B 1500	1
▲	1	37555	(000000-)	Cap, Screw	4
▲	2	31354	(000000-)	Flange Mounting	1
▲	3	16695	(000000-)	Race Thrust	1
▲	4	45628	(000000-)	Thrust Bearing	1
▲	5	28854	(000000-)	Shaft, Output	1
▲	6	74100	(000000-)	Housing Cl	1
▲	7	74175	(000000-)	Drive Cl	1
▲	8	74094	(000000-)	Spacer Plate Cl	1
▲	9	74177	(000000-)	Gerotor Assy Cl	1
▲	10	74095	(000000-)	End Cap Cl	1
▲	11	74178	(000000-)	Screw Cap Cl	5
▲	12	74098	(000000-)	Plug Assembly Ph	1
▲	13	74099	(000000-)	Plug Assembly Ph	2
▲	14	00500-15	(000000-)	Key-Wdruff 0.25 1.00 Asa#0808	1
▲	15	61490	(000000-)	Seal Replmt Kit	1
	16	74250	(000000-)	Repair Info. Cl	1

Fig. 6 - Hydraulic Motor Breakdown, 73098

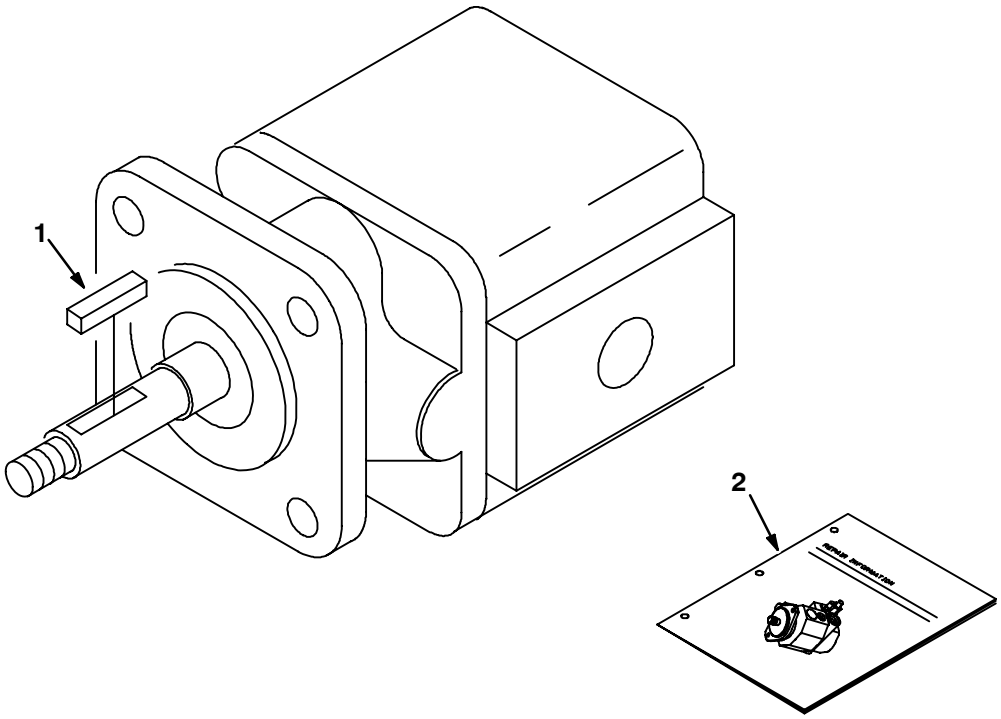

09664-09670 - ALL

	Ref.	Part No.	Serial Number	Description	Qty.
▽		73098	(000000-)	Motor, Hyd Gear Ex 0.26 R 3000	1
▲	1	00960	(000000-)	Key Square 0.12 0.12 00.50 Lg	1
▲		74233	(000000-)	Seal Kit, Hyd Mtr Gear Bn	1
	2	IB3614	(000000-)	Repair Info.	1

Fig. 7 - Hydraulic Motor Breakdown, 73112

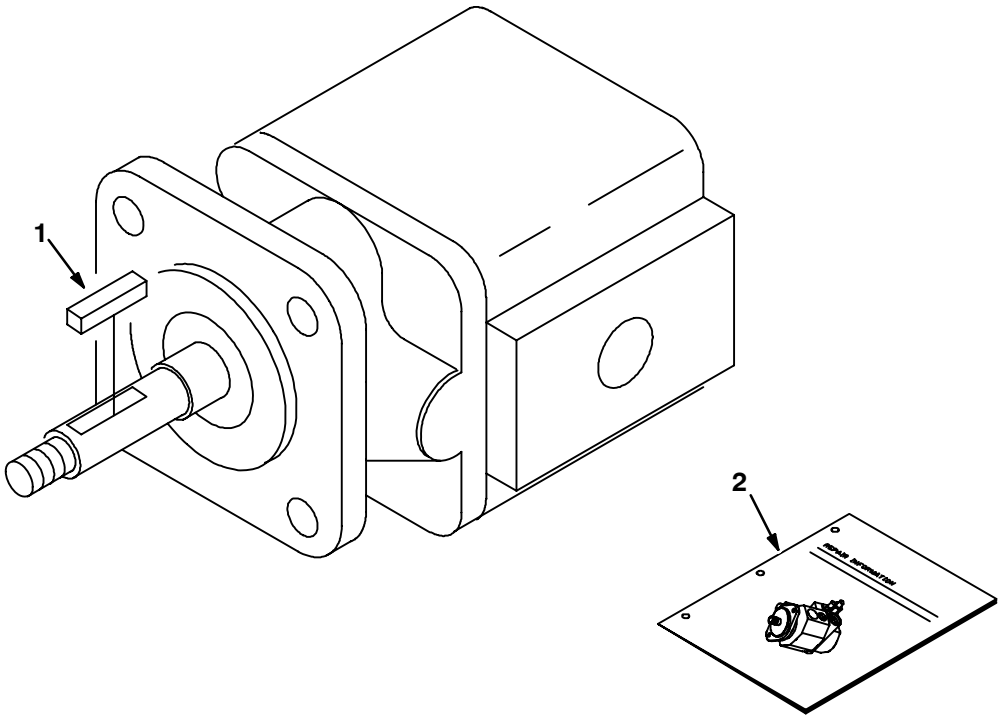

09664-09670 - ALL

	Ref.	Part No.	Serial Number	Description	Qty.
▽		73112	(000000-)	Motor, Hyd Gear Ex 0.13 L 3000	1
▲	1	00954	(000000-)	Key Square 0.12 0.12 01.00 Lg	1
▲		74233	(000000-)	Seal Kit, Hyd Mtr Gear Bn	1
	2	IB3614	(000000-)	Repair Info.	1

Fig. 8 - Hydraulic Motor Breakdown, 84009

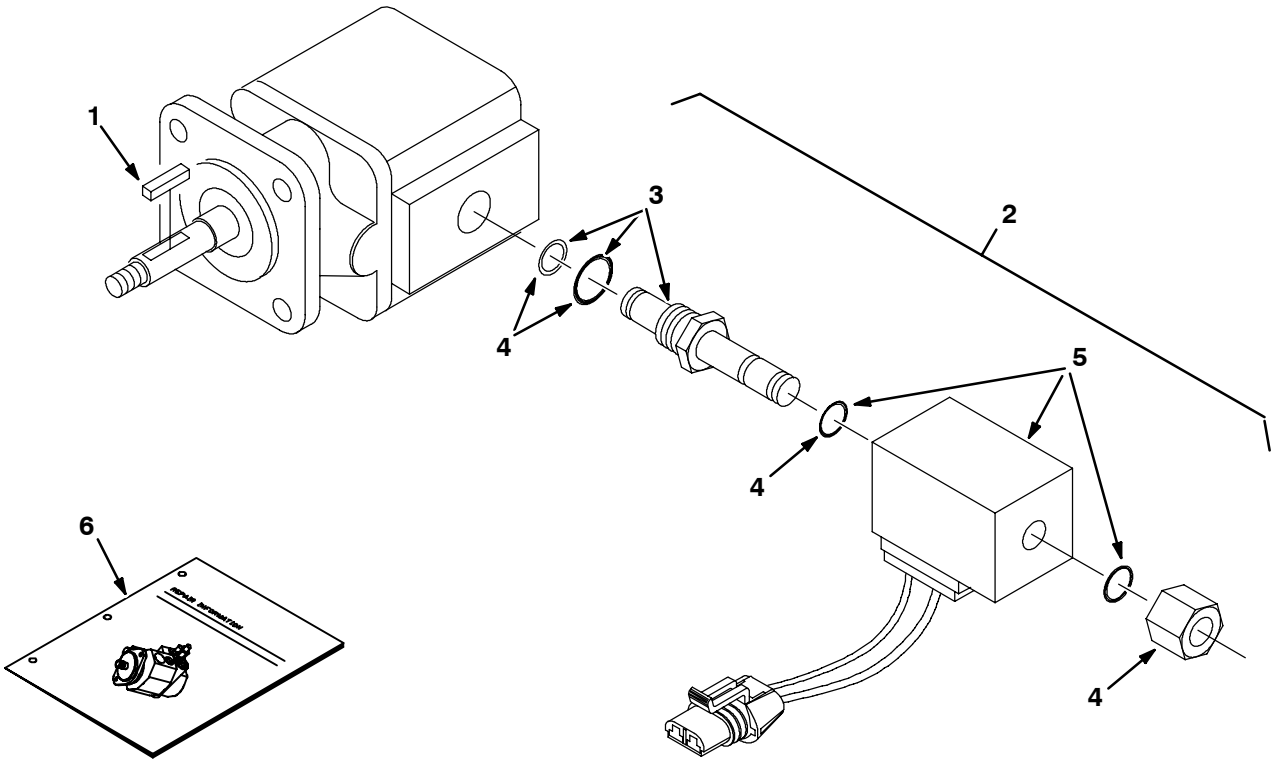

11085-09670 - ALL

	Ref.	Part No.	Serial Number	Description	Qty.
▽		84009	(000000-)	Motor, Hydraulic	1
▲		74233	(000000-)	Seal Kit, Motor	1
▲	1	00966	(000000-)	Key	1
▲▽	2	84008	(000000-)	Valve Assembly, Solenoid	1
▲▲	3	59378	(000000-)	Cartridge, Solenoid Valve	1
▲▲	4	48813	(000000-)	Seal Kit, One Cartridge	1
▲▲	5	21916	(000000-)	Coil	1
	6	IB3614	(000000-)	Repair Info.	1

Fig. 9 - Hydraulic Motor Breakdown, 74468

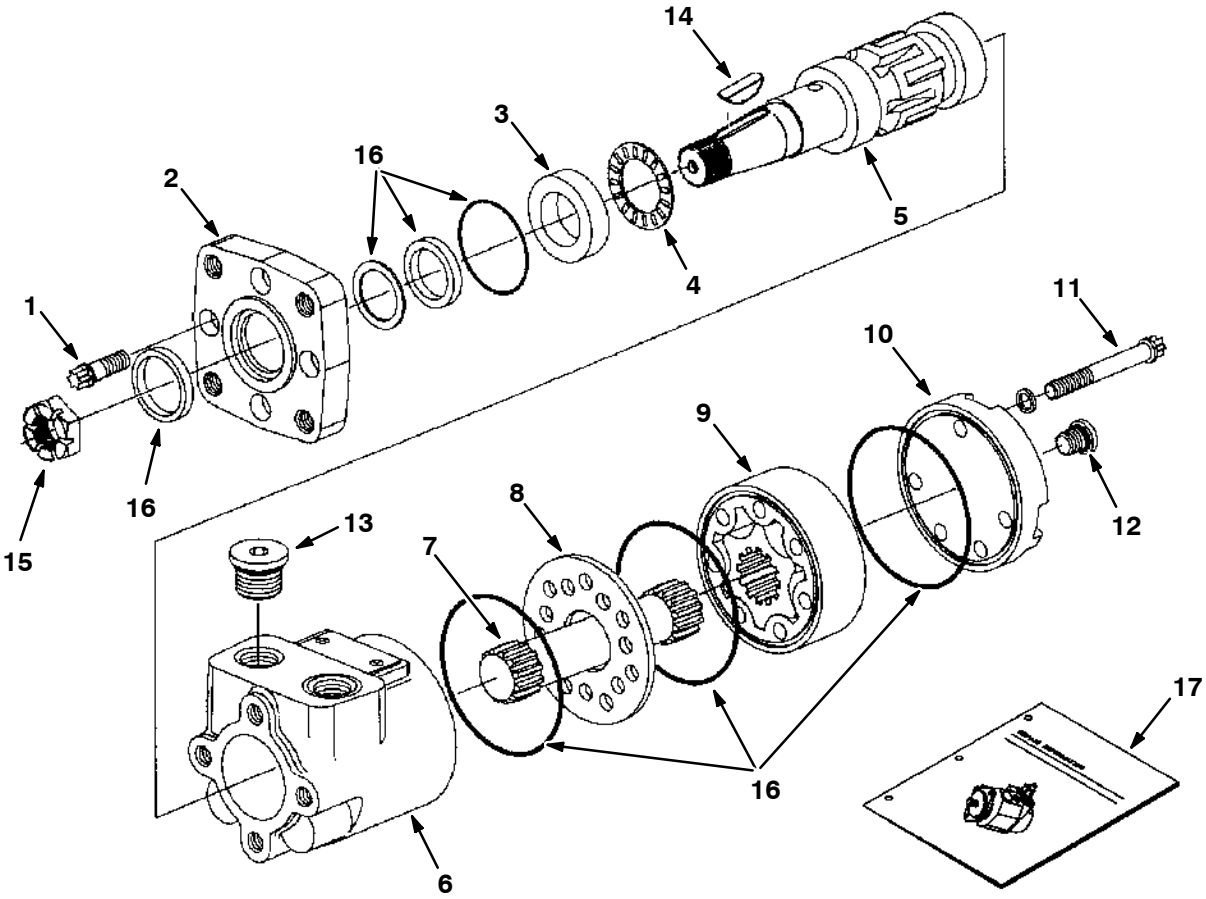

09606-09670 - ALL

	Ref.	Part No.	Serial Number	Description	Qty.
▽		74468	(000000-)	Motor, Hyd Gear In 02.8 B 1500	1
▲	1	37555	(000000-)	Cap, Screw	4
▲	2	31354	(000000-)	Flange Mounting	1
▲	3	16695	(000000-)	Race Thrust	1
▲	4	45628	(000000-)	Thrust Bearing	1
▲	5	31375	(000000-)	Shaft, Output	1
▲	6	74100	(000000-)	Housing Cl	1
▲	7	34176	(000000-)	Drive	1
▲	8	74094	(000000-)	Spacer Plate Cl	1
▲	9	31381	(000000-)	Gerotor Set	1
▲	10	74095	(000000-)	End, Cap	1
▲	11	74174	(000000-)	Cap, Screw Cl	5
▲	12	74098	(000000-)	Plug Assembly Ph	1
▲	13	74099	(000000-)	Plug Assembly Ph	2
▲	14	00500-15	(000000-)	Key-Wdruff 0.25 1.00 Asa#0808	1
▲	15	39527	(000000-)	Nut-Hxslot .75-16 Pltd	1
▲	16	61490	(000000-)	Seal Replmt Kit	1
	17	74250	(000000-)	Repair Info. Cl	1

Fig. 10 - Hydraulic Steering Valve Breakdown, 73093

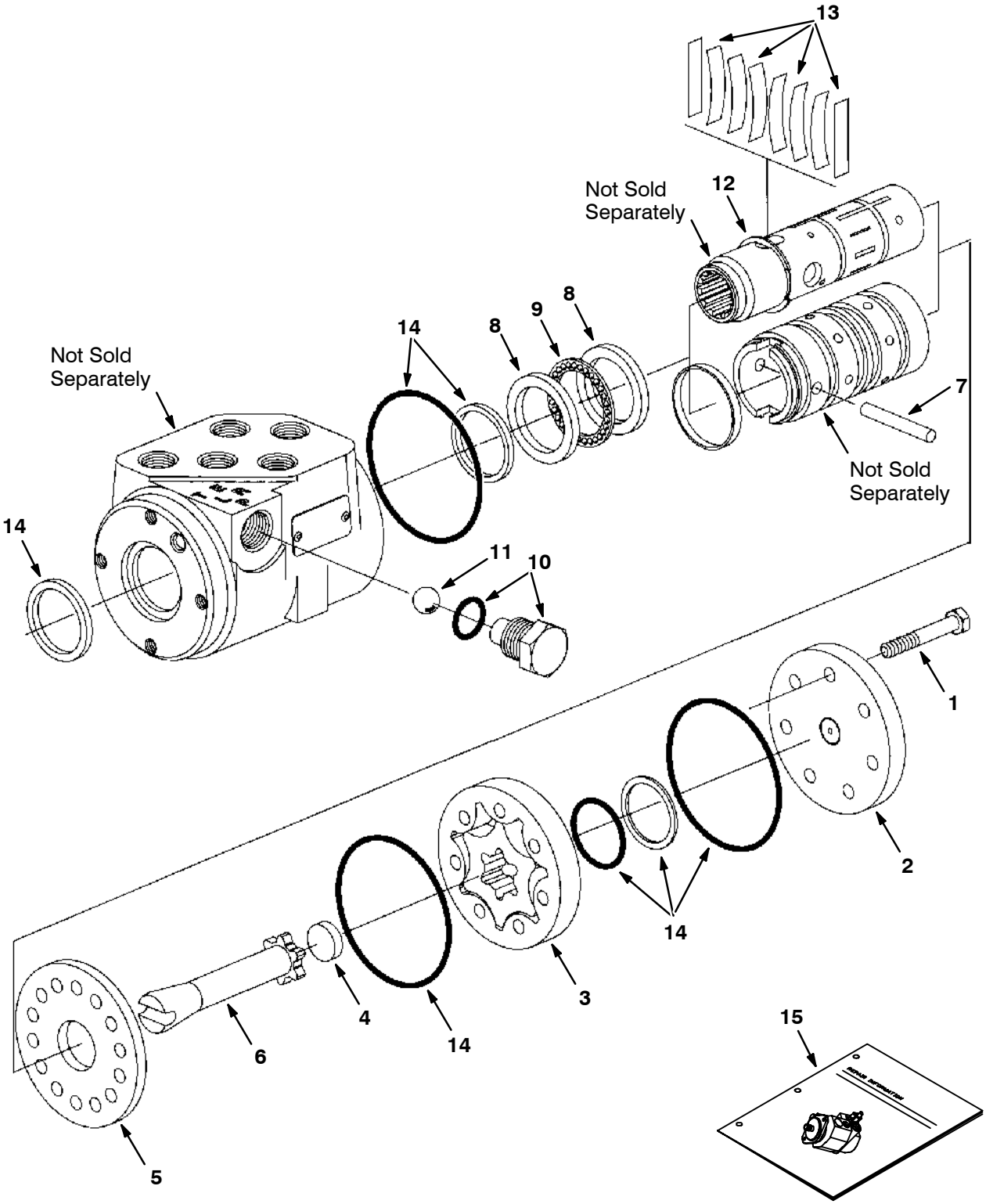

09618-09670 - ALL

Fig. 10 - Hydraulic Steering Valve Breakdown, 73093

	Ref.	Part No.	Serial Number	Description	Qty.
▽		73093	(000000-)	Steer Control, NYD#2 06.1 1000	1
▲	1	74183	(000000-)	Screw, Cap Cl	7
▲	2	74185	(000000-)	Cap, End Cl	1
▲	3	74192	(000000-)	Gerotor S/A Cl	1
▲	4	74193	(000000-)	Spacer Cl	1
▲	5	74222	(000000-)	Plate, Wear Cl	1
▲	6	74231	(000000-)	Drive Cl	1
▲	7	74232	(000000-)	Pin Cl	1
▲	8	74234	(000000-)	Race, Bearing Cl	2
▲	9	74236	(000000-)	Bearing Cl	1
▲	10	74241	(000000-)	Plug Assy Cl	1
▲	11	74242	(000000-)	Ball Cl	1
▲	12	74243	(000000-)	Ring, Retaining Cl	1
▲	13	74196	(000000-)	Spring Kit, Scu Cl	1
▲	14	74244	(000000-)	Seal Kit, Stg Cl	1
	15	74245	(000000-)	Repair Info Cl	1

Fig. 11 - Hydraulic Piston Pump Breakdown, 373486

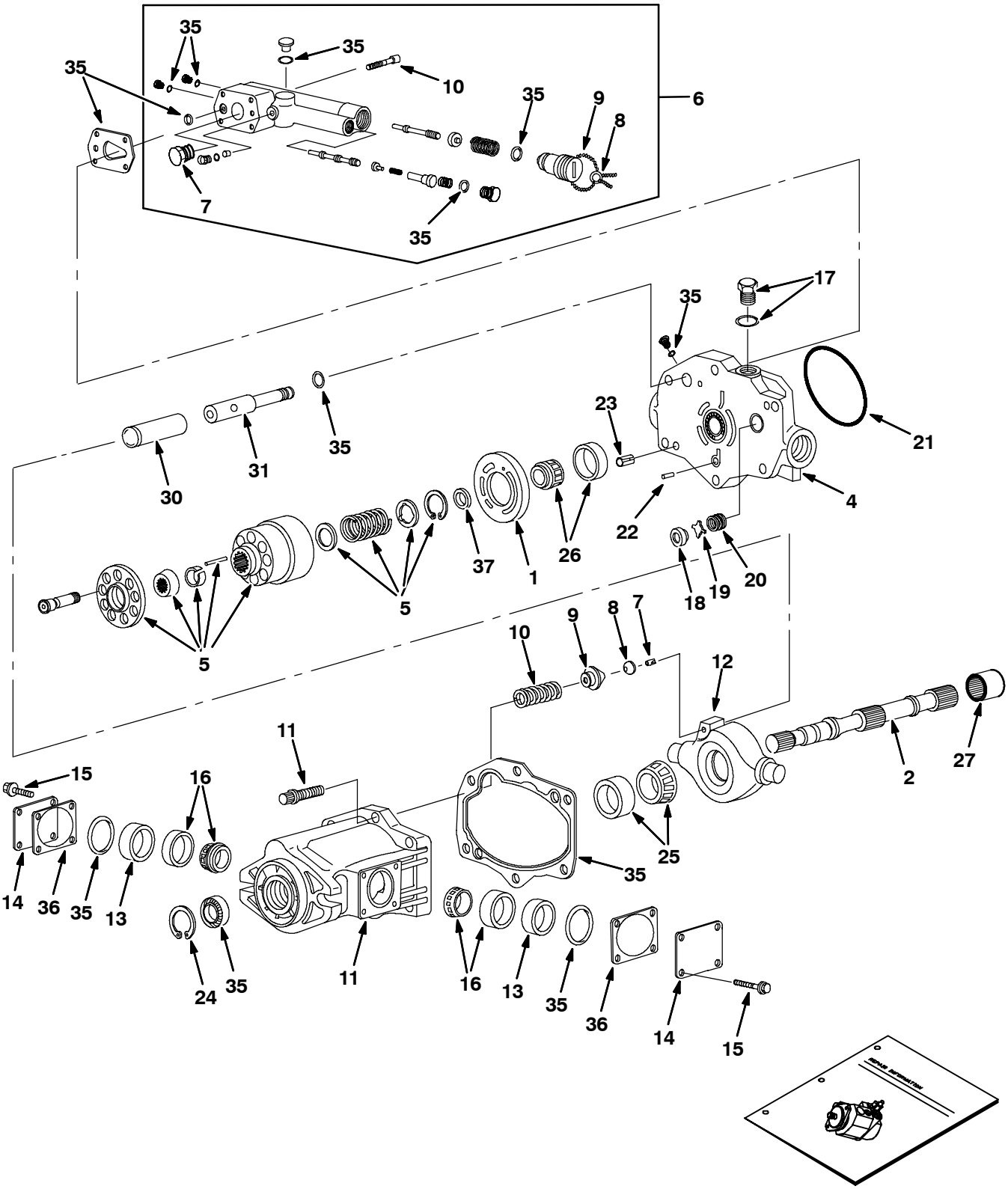

ALL

Fig. 11 - Hydraulic Piston Pump Breakdown, 373486

	Ref.	Part No.	Serial Number	Description	Qty.
▽		373486	(000000-)	Pump, Hyd, Piston [L] 2.75 [R] 2500	1
▲	1	373504	(000000-)	Plate, Valve	1
▲	2	373505	(000000-)	Drive Shaft	1
▲	3	373506	(000000-)	Housing	1
▲	4	373507	(000000-)	Cover, End	1
▲	5	373508	(000000-)	Kit, Rotating Group	1
▲▽	6	373509	(000000-)	Compensator, Psi And Flow	1
▲▲	7	373533	(000000-)	Plug	1
▲▲	8	373534	(000000-)	Seal, Wire	1
▲▲	9	373535	(000000-)	Wire	1
▲▲	10	373529	(000000-)	Screw, Cap	4
▲	11	373514	(000000-)	Bolt	6
▲	12	373515	(000000-)	Plate, Swash	1
▲	13	373516	(000000-)	Spacer	2
▲	14	373517	(000000-)	Cover	2
▲	15	373518	(000000-)	Screw	8
▲	16	373519	(000000-)	Bearing Assy	2
▲	17	74099	(000000-)	Plug, O-Ring, Motor, Hyd	1
▲	18	373520	(000000-)	Seat, Valve, Check	1
▲	19	373521	(000000-)	Poppet, Valve, Check	1
▲	20	373522	(000000-)	Spring, Valve, Check	1
▲	21	373537	(000000-)	Seal, Org	1
▲	22	373523	(000000-)	Pin	1
▲	23	373524	(000000-)	Pin	2
	24	373525	(000000-)	Ring, Retaining	1
▲	25	373526	(000000-)	Bearing Assy	1
▲	26	373527	(000000-)	Bearing Assy	1
▲	27	373528	(000000-)	Coupling	1
▲	28	373513	(000000-)	Spring	1
▲	29	373530	(000000-)	Ring, Retaining	1
▲	30	373531	(000000-)	Piston	1
▲	31	373532	(000000-)	Rod, Piston	1
▲	32	373510	(000000-)	Pin, Roll	1
▲	33	373511	(000000-)	Seat, Spherical	1
▲	34	373512	(000000-)	Seat, Spring	1
▲	35	373536	(000000-)	Kit, Seal, Pump	1
▲	36	373539	(000000-)	Kit, Shim, Brg	1
▲	37	373540	(000000-)	Kit, Spacer, Brg	1
▲	38	373538	(000000-)	Instr, Pump Repair	1

Fig. 12 - Hydraulic Pump Breakdown, 73101

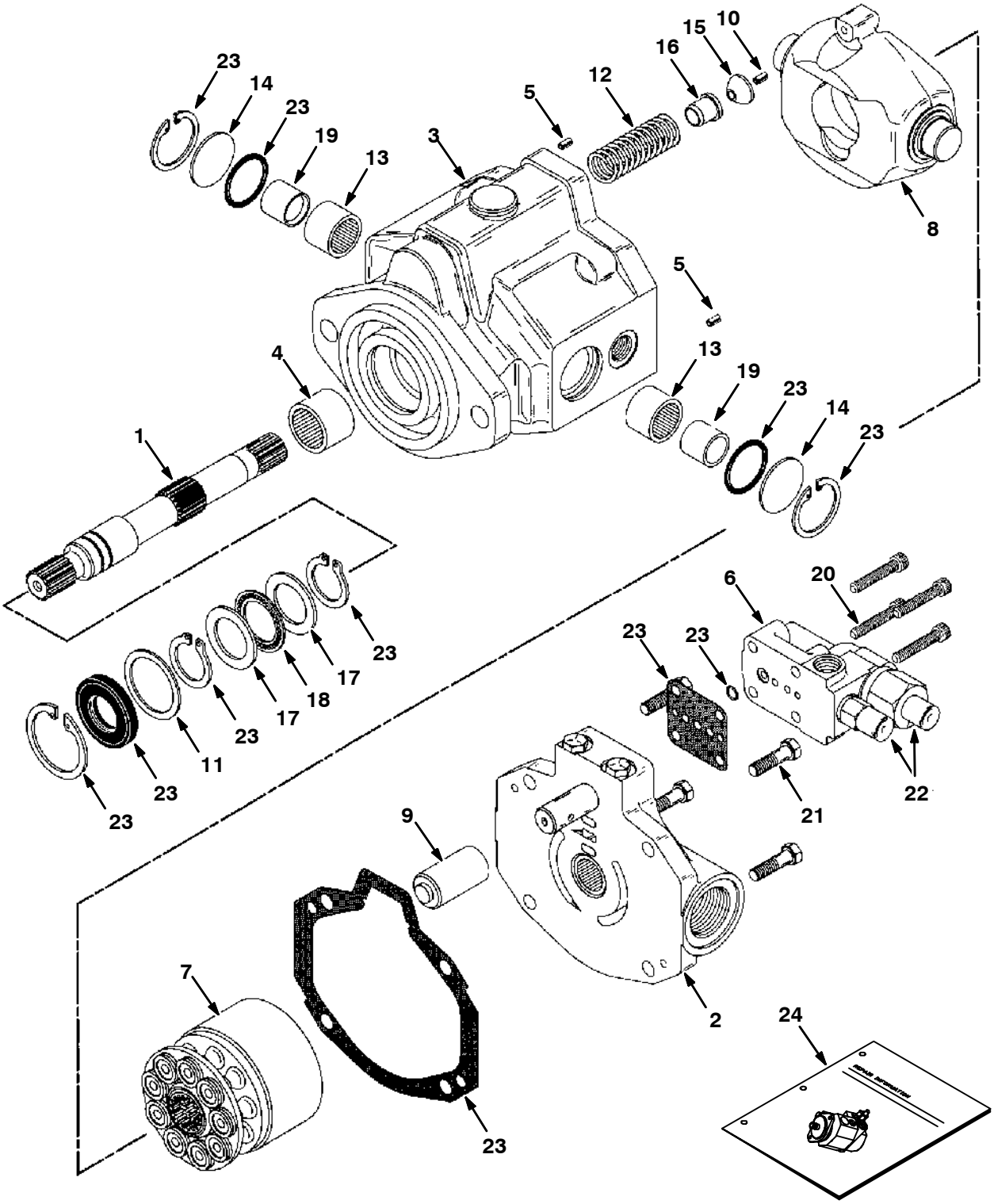

09614-09670 - ALL

Fig. 12 - Hydraulic Pump Breakdown, 73101

	Ref.	Part No.	Serial Number	Description	Qty.
▽		73101	(000000-)	Pump, Hyd Piston L 2.77 R 2500	1
▲	1	74199	(000000-)	Shaft, Drive Ce	1
▲	2	74200	(000000-)	Backplate S/A Ce	1
▲▽	3	74201	(000000-)	Housing Assy Ce	1
▲▲	4	37462	(000000-)	Bearing	1
▲▲	5	37704	(000000-)	Rollpin	2
▲	6	74202	(000000-)	Compensator Ce	1
▲	7	74203	(000000-)	Rotating Kit Ce	1
▲	8	74204	(000000-)	Camplate Ce	1
▲	9	74205	(000000-)	Piston, Control Ce	1
▲	10	74206	(000000-)	Pin, Roll Ce	1
▲	11	37460	(000000-)	Washer	1
▲	12	74207	(000000-)	Spring Ce	1
▲	13	37448	(000000-)	Bearing	2
▲	14	37471	(000000-)	Cover	2
▲	15	74208	(000000-)	Button, Pivot Ce	1
▲	16	74209	(000000-)	Collar, Spring Ce	1
▲	17	74240	(000000-)	Race, Bearing Ce	2
▲	18	74210	(000000-)	Bearing Ce	1
▲	19	37454	(000000-)	Bearing Race	2
▲	20	74211	(000000-)	Screw, Cap Ce	4
▲	21	74212	(000000-)	Screw, Cap Ce	4
▲	22	74213	(000000-)	Cover Ce	2
▲	23	74198	(000000-)	Seal Kit, Pump Ce	1
	24	74247	(000000-)	Repair Info. Ce	1

Fig. 13 - Hydraulic Pump Breakdown, 73102

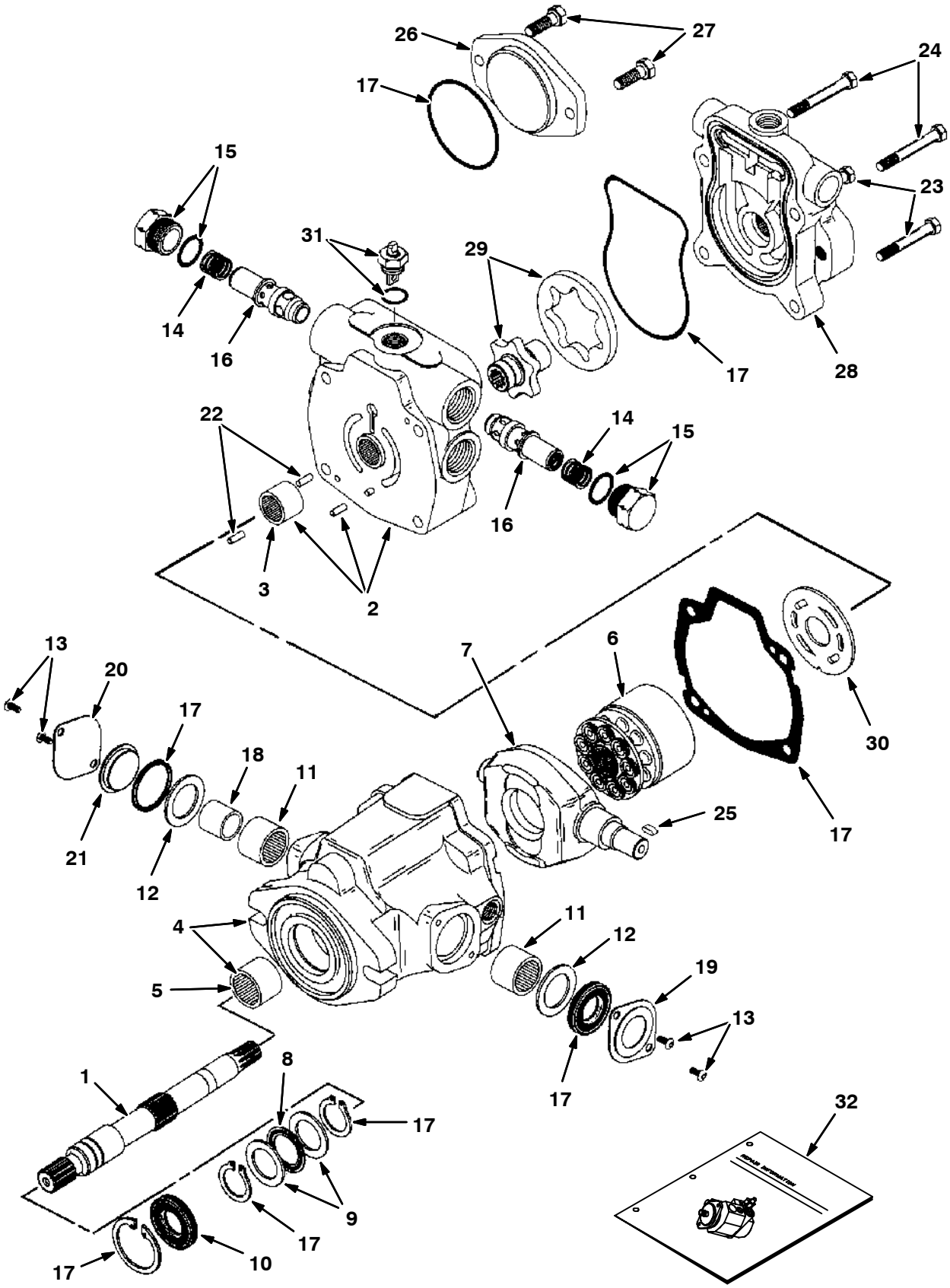

09791-09670 - ALL

Fig. 13 - Hydraulic Pump Breakdown, 73102

	Ref.	Part No.	Serial Number	Description	Qty.
▽		73102	(000000-)	Pump, Hyd Piston V 1.24	1
▲	1	74221	(000000-)	Shaft, Drive	1
▲	2	70094	(000000-)	Backplate Assy	1
▲	3	55937	(000000-)	Roller Bearing	1
▲	4	70095	(000000-)	Housing Assy, Pump	1
▲	5	55939	(000000-)	Roller Bearing	1
▲	6	02706	(000000-)	Rotating Kit	1
▲	7	57897	(000000-)	Camplate	1
▲	8	74225	(000000-)	Bearing, Thrust	1
▲	9	74226	(000000-)	Race, Bearing	2
▲	10	74227	(000000-)	Spacer	1
▲	11	02709	(000000-)	Bearing Cam	2
▲	12	70097	(000000-)	Washer	2
▲	13	61891	(000000-)	Screws	4
▲	14	74229	(000000-)	Spring	2
▲	15	74230	(000000-)	Plug S/A	2
▲	16	55941	(000000-)	Relief Valve	2
▲	17	70103	(000000-)	Seal Kit, Pump	1
▲	18	02705	(000000-)	Race, Inner Bearing	1
▲	19	52386	(000000-)	Cover	1
▲	20	70098	(000000-)	Cover, Trunion	1
▲	21	70099	(000000-)	Cover, O-Ring	1
▲	22	70100	(000000-)	Pin, Dowel	2
▲	23	74235	(000000-)	Screw, Cap	2
▲	24	70101	(000000-)	Screw, .31-18X3.75	2
▲	25	74237	(000000-)	Key	1
▲	26	74238	(000000-)	Plate, Cover	1
▲	27	74239	(000000-)	Screw, Cap	2
▲	28	55930	(000000-)	Pump Adaptor Assy	1
▲	29	55932	(000000-)	Geroter & Coupler	1
▲	30	374298	(000000-)	Plate Kit, Valve, Replmt	1
▲	31	74469	(000000-)	Valve, Dump	1
▲	32	74248	(000000-)	Repair Info, Pmp CE	1

Fig. 14 - Hydraulic Pump Breakdown, 79770

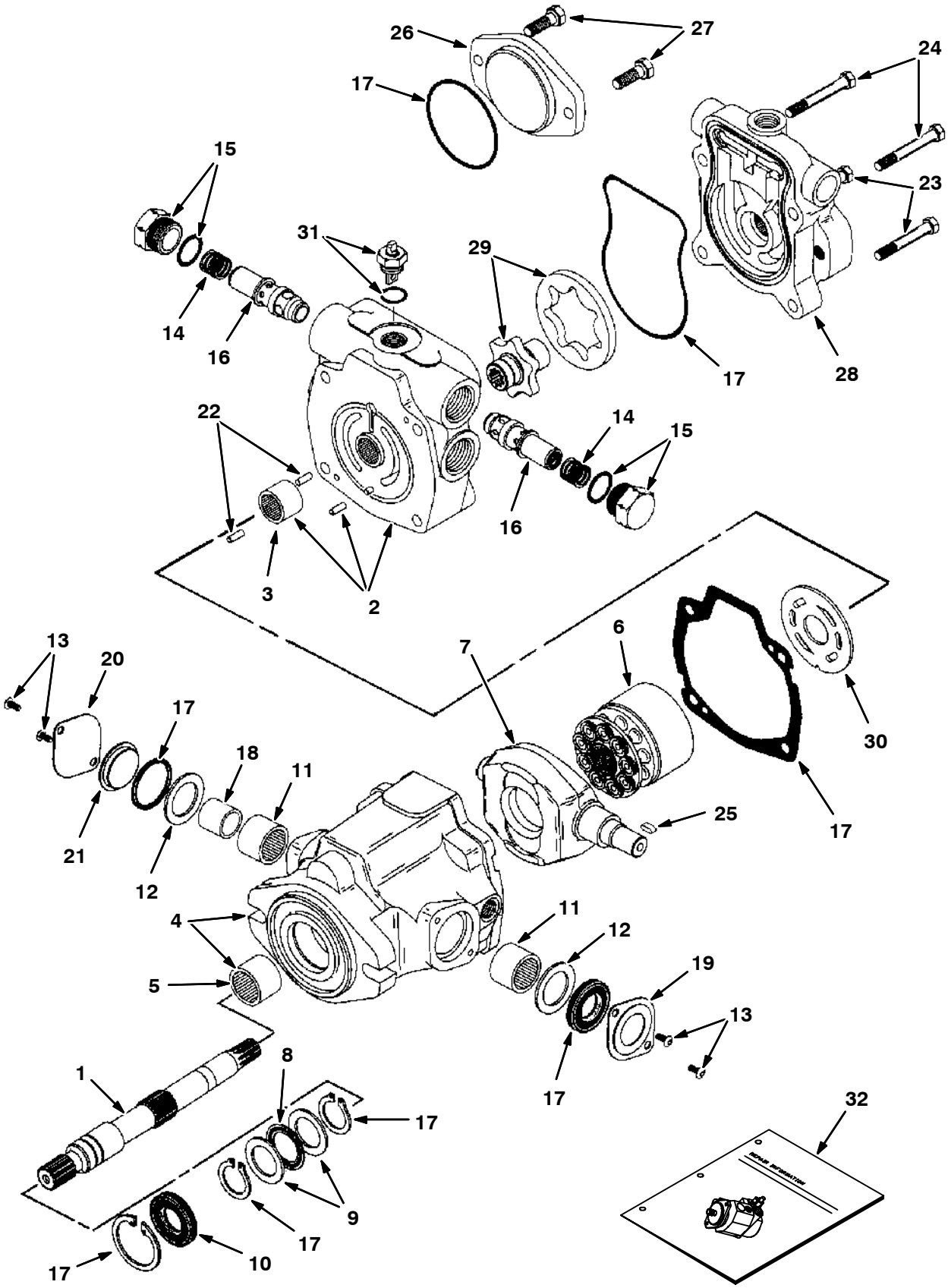

09791-09670 - ALL

Fig. 14 - Hydraulic Pump Breakdown, 79770

	Ref.	Part No.	Serial Number	Description	Qty.
▽		79770	(000000-)	Pump, Hyd Piston V 1.24 R 4000	1
▲	1	74221	(000000-)	Shaft, Drive	1
▲	2	70094	(000000-)	Backplate Assy	1
▲	3	55937	(000000-)	Roller Bearing	1
▲	4	70095	(000000-)	Housing Assy, Pump	1
▲	5	55939	(000000-)	Roller Bearing	1
▲	6	02706	(000000-)	Rotating Kit	1
▲	7	57897	(000000-)	Camplate	1
▲	8	74225	(000000-)	Bearing, Thrust	1
▲	9	74226	(000000-)	Race, Bearing	2
▲	10	74227	(000000-)	Spacer	1
▲	11	02709	(000000-)	Bearing Cam	2
▲	12	70097	(000000-)	Washer	2
▲	13	61891	(000000-)	Screws	4
▲	14	74229	(000000-)	Spring	2
▲	15	74230	(000000-)	Plug S/A	2
▲	16	55941	(000000-)	Relief Valve	2
▲	17	70103	(000000-)	Seal Kit, Pump	1
▲	18	02705	(000000-)	Race, Inner Bearing	1
▲	19	52386	(000000-)	Cover	1
▲	20	70098	(000000-)	Cover, Trunion	1
▲	21	70099	(000000-)	Cover, O-Ring	1
▲	22	70100	(000000-)	Pin, Dowel	2
▲	23	74235	(000000-)	Screw, Cap	2
▲	24	70101	(000000-)	Screw, .31-18X3.75	2
▲	25	74237	(000000-)	Key	1
▲	26	74238	(000000-)	Plate, Cover	1
▲	27	74239	(000000-)	Screw, Cap	2
▲	28	55930	(000000-)	Pump Adaptor Assy	1
▲	29	55932	(000000-)	Geroter & Coupler	1
▲	30	74180	(000000-)	Plate, Valve	1
▲	31	74469	(000000-)	Valve, Dump	1
▲	32	74248	(000000-)	Repair Info, Pmp CE	1

Fig. 15 - Hydraulic Piston Pump Breakdown, 373485

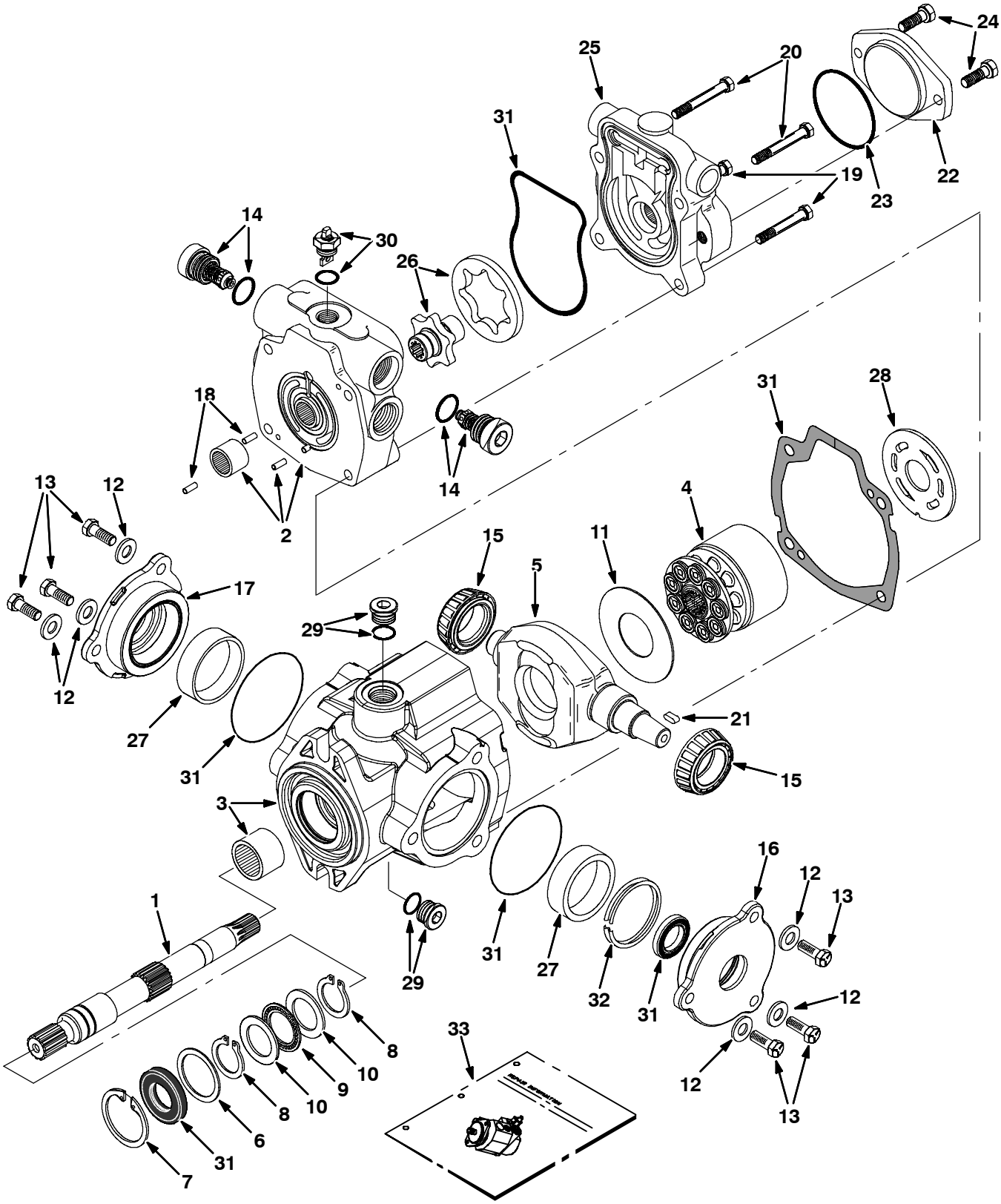

ALL

Fig. 15 - Hydraulic Piston Pump Breakdown, 373485

	Ref.	Part No.	Serial Number	Description	Qty.
▽		373485	(000000-)	Pump, Hyd, Piston [V] 1.24 [R] 4000	1
▲	1	373499	(000000-)	Shaft, Drive	1
▲	2	373500	(000000-)	Cover Assy, End	1
▲	3	373501	(000000-)	Housing Assy	1
▲	4	02706	(000000-)	Kit, Rotating, Pump, Hyd [Cessna]	1
▲	5	373493	(000000-)	Plate, Cam	1
▲	6	70096	(000000-)	Washer, Flt, Pump, Hyd	1
▲	7	55926	(000000-)	Ring, Retaining, Pump, Hyd	1
▲	8	373434	(000000-)	Ring, Retaining	2
▲	9	74225	(000000-)	Bearing, Thrust, Pump, Hyd	1
▲	10	74226	(000000-)	Race, Bearing, Pump, Hyd	2
▲	11	373327	(000000-)	Insert, Plate, Cam, Pump, Hyd	1
▲	12	373391	(000000-)	Washer, Pump, Hyd En	6
▲	13	373346	(000000-)	Screw, Cap	6
▲	14	373494	(000000-)	Valve, Relief, 4000 Psi	2
▲	15	373317	(000000-)	Bearing, Cone, Pump, Hyd	2
▲	16	373393	(000000-)	Plate, Cover	1
▲	17	373394	(000000-)	Plate, Cover	1
▲	18	70100	(000000-)	Pin, Dowel, Pump, Hyd	2
▲	19	373336	(000000-)	Screw, Cap, Pump, Hyd	2
▲	20	373337	(000000-)	Screw, Cap, Pump, Hyd	2
▲	21	74237	(000000-)	Key, Shaft, Pump, Hyd	1
▲	22	74238	(000000-)	Plate, Cover	1
▲	23	65145-1	(000000-)	Seal, O-Ring, .069 X 3.06id	1
▲	24	76957	(000000-)	Screw, Hex, .31-18 X 1.50, 5	2
▲	25	373503	(000000-)	Pump Assy, Charging	1
▲	26	55932	(000000-)	Gerotor	1
▲	27	373395	(000000-)	Bearing, Cup	2
▲	28	74180	(000000-)	Plate, Valve, Pump, Hyd	1
▲	29	13907	(000000-)	Fitting, Plug, O-Ring [Eaton]	2
▲	30	373502	(000000-)	Valve Assy, By-Pass	1
▲	31	373398	(000000-)	Kit, Seal, Hyd, Pump	1
▲	32	373402	(000000-)	Kit, Shim	1
▲	33	373429	(000000-)	Instr, Repair, Pump	1

Fig. 16 - Hydraulic Solenoid Valve Breakdown, 84011

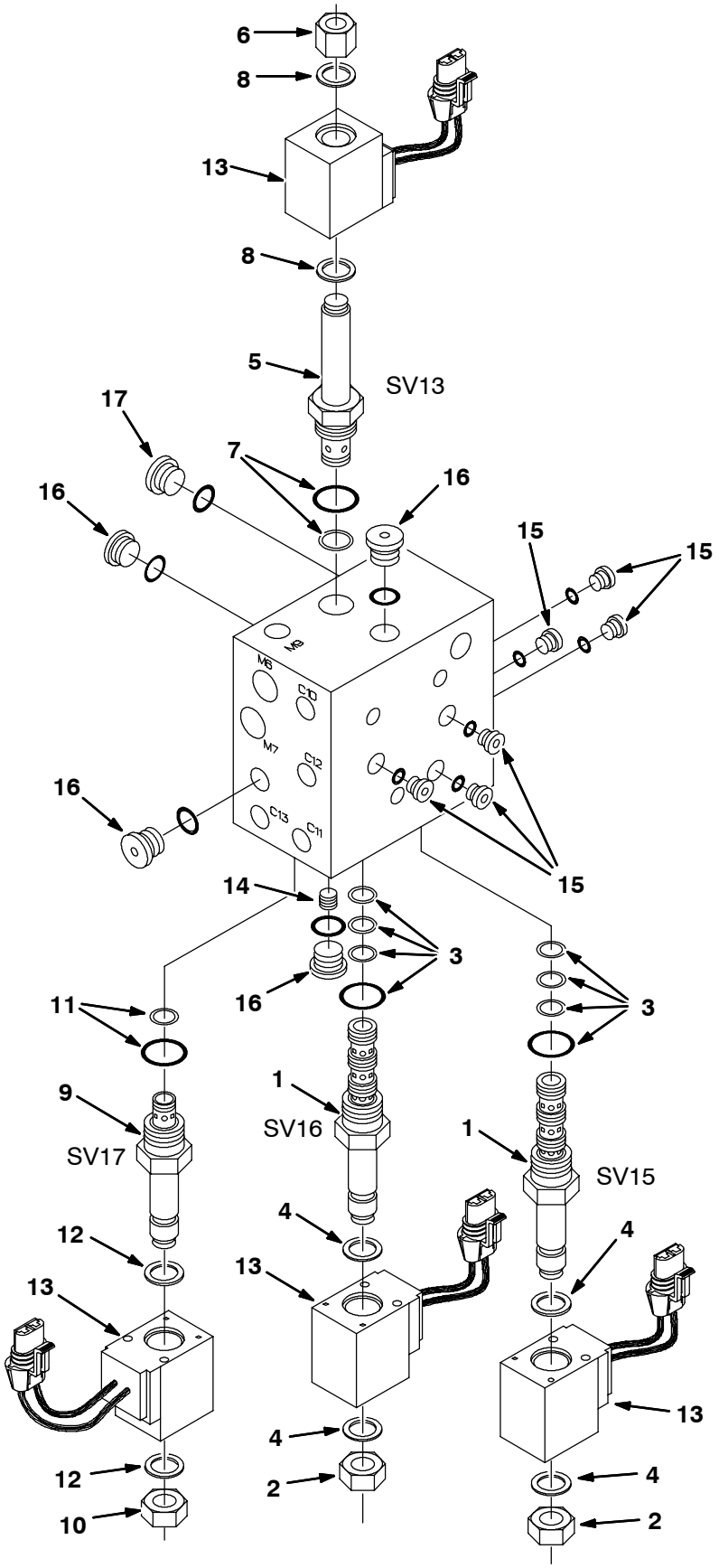

11079 - ALL

Fig. 16 - Hydraulic Solenoid Valve Breakdown, 84011

	Ref.	Part No.	Serial Number	Description	Qty.
▽		84011	(000000-)	Valve, Hyd Cntrl Sol	1
▲▽	1	79719	(000000-)	Valve Stem 4W2P	2
▲▲	2	79728	(000000-)	Nut, Cart., Sht Cp	1
▲▲	3	79711	(000000-)	Seal Kit, Cart Cp	1
▲▲	4	79740	(000000-)	Seal Kit, Coil Cp	1
▲▽	5	79732	(000000-)	Valve Stem N.O. Cp	1
▲▲	6	79731	(000000-)	Nut, Cart., Lng Cp	1
▲▲	7	79711	(000000-)	Seal Kit, Cart Cp	1
▲▲	8	79740	(000000-)	Seal Kit, Coil Cp	1
▲▽	9	79716	(000000-)	Valve Stem	1
▲▲	10	79728	(000000-)	Nut, Cart., Sht Cp	1
▲▲	11	79711	(000000-)	Seal Kit, Cart Cp	1
▲▲	12	79740	(000000-)	Seal Kit, Coil Cp	1
▲	13	21916	(000000-)	Coil, 12V	4
▲	14	79733	(000000-)	Plug, Orifice Cp	1
▲	15	13902	(000000-)	Plug #2	6
▲	16	74098	(000000-)	Plug #4	4
▲	17	13904	(000000-)	Plug #6	1

Fig. 17 - Hydraulic Solenoid Valve Breakdown, 84012

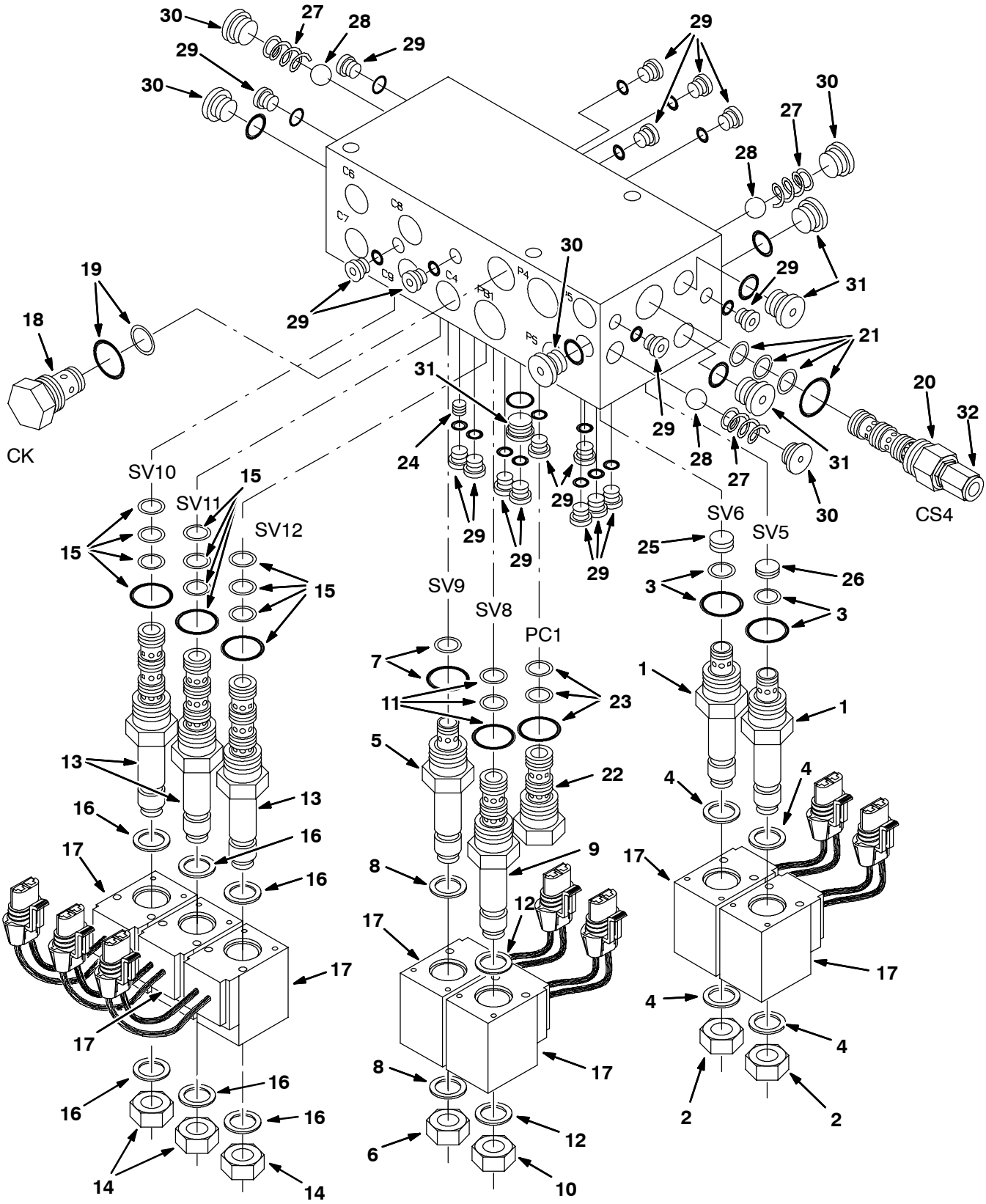

11081 - ALL

Fig. 17 - Hydraulic Solenoid Valve Breakdown, 84012

	Ref.	Part No.	Serial Number	Description	Qty.
▽		84012	(000000-)	Valve, Hyd Control Sol	1
▲▽	1	79716	(000000-)	Valve Stem	2
▲▲	2	79728	(000000-)	Nut, Cart., Sht Cp	1
▲▲	3	79711	(000000-)	Seal Kit, Cart Cp	1
▲▲	4	79740	(000000-)	Seal Kit, Coil Cp	1
▲▽	5	22758	(000000-)	Valve Stem N.C. Cp	1
▲▲	6	79728	(000000-)	Nut, Cart., Sht Cp	1
▲▲	7	79711	(000000-)	Seal Kit, Cart Cp	1
▲▲	8	79740	(000000-)	Seal Kit, Coil Cp	1
▲▽	9	79718	(000000-)	Valve Stem 3W2P	1
▲▲	10	79728	(000000-)	Nut, Cart., Sht Cp	1
▲▲	11	79711	(000000-)	Seal Kit, Cart Cp	1
▲▲	12	79740	(000000-)	Seal Kit, Coil Cp	1
▲▽	13	79719	(000000-)	Valve Stem 4W2P	3
▲▲	14	79728	(000000-)	Nut, Cart., Sht Cp	1
▲▲	15	79711	(000000-)	Seal Kit, Cart Cp	1
▲▲	16	79740	(000000-)	Seal Kit, Coil Cp	1
▲	17	21916	(000000-)	Coil, 12V	7
▲▽	18	79721	(000000-)	Cart, Check Vlv Cp	1
▲▲	19	79711	(000000-)	Seal Kit, Cart Cp	1
▲▽	20	79722	(000000-)	Cart,Logic Cntl Cp	1
▲▲	21	79711	(000000-)	Seal Kit, Cart Cp	1
▲▽	22	74145	(000000-)	Cart,Pilot Cntr Cp	1
▲▲	23	79711	(000000-)	Seal Kit, Cart Cp	1
▲	24	79723	(000000-)	Plug, Orifice Cp	1
▲	25	79724	(000000-)	Plug, Orifice Cp	1
▲	26	79725	(000000-)	Plug, Orifice Cp	1
▲	27	79726	(000000-)	Spring, Conical Cp	3
▲	28	79727	(000000-)	Ball, .313 Dia. Cp	3
▲	29	13902	(000000-)	Plug #2	17
▲	30	74098	(000000-)	Plug #4	4
▲	31	13904	(000000-)	Plug #6	4
▲	32	79738	(000000-)	Screw, Cap, Valve, Hyd	1

Fig. 18 - Hydraulic Solenoid Valve Breakdown, 84010

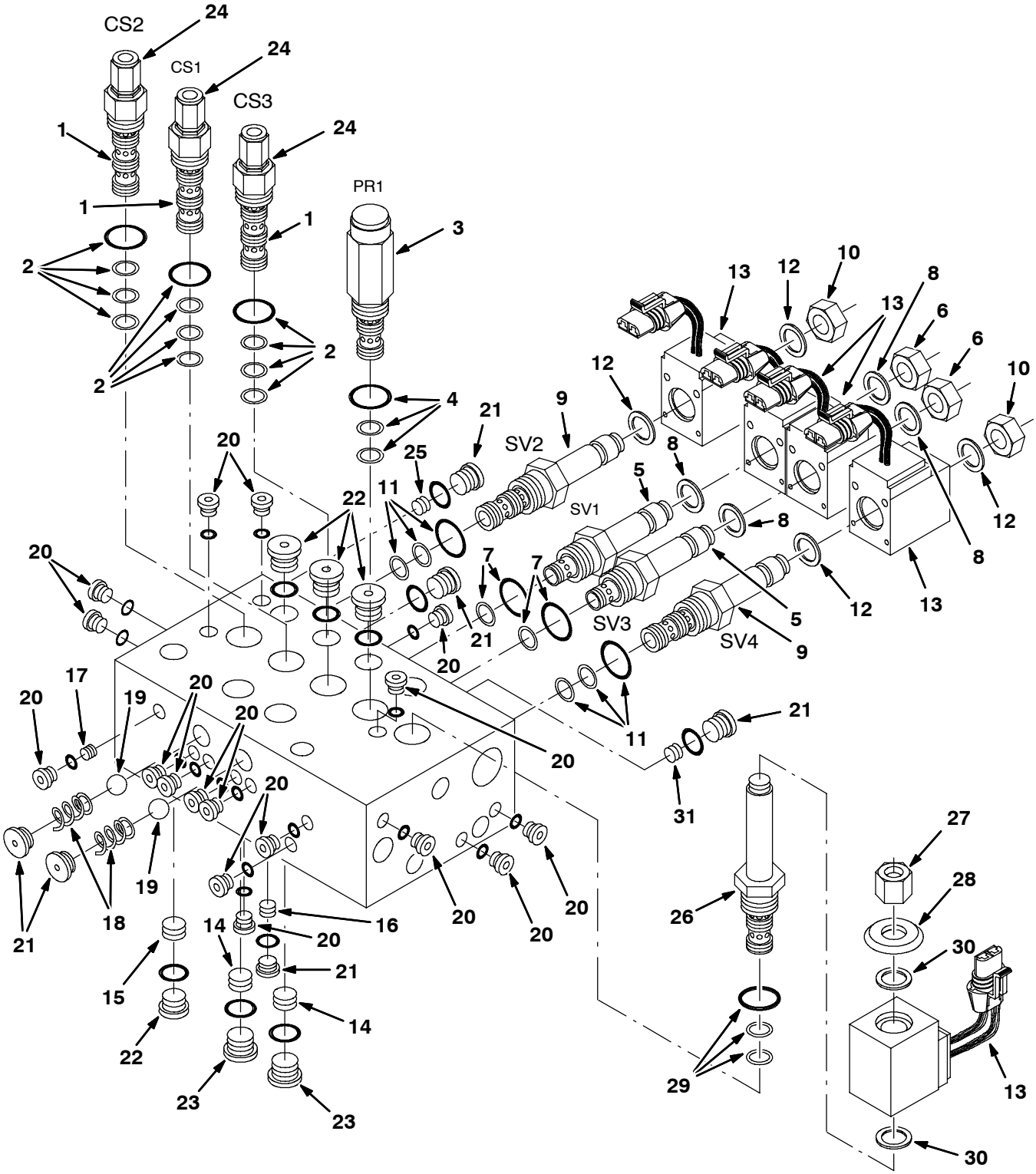

11083 - ALL

Fig. 18 - Hydraulic Solenoid Valve Breakdown, 84010

	Ref.	Part No.	Serial Number	Description	Qty.
▽		84010	(000000-)	Valve, Hyd Control Sol	1
▲▽	1	79722	(000000-)	Cart,Logic Cntl Cp	3
▲▲	2	79711	(000000-)	Seal Kit, Cart Cp	1
▲▽	3	21977	(000000-)	Cart.Psi Ct Cp	1
▲▲	4	79711	(000000-)	Seal Kit, Cart Cp	1
▲▽	5	79716	(000000-)	Valve Stem	2
▲▲	6	79728	(000000-)	Nut, Cart., Sht Cp	1
▲▲	7	79711	(000000-)	Seal Kit, Cart Cp	1
▲▲	8	79740	(000000-)	Seal Kit, Coil Cp	1
▲▽	9	79718	(000000-)	Valve Stem 3W2P	2
▲▲	10	79728	(000000-)	Nut, Cart., Sht Cp	1
▲▲	11	79711	(000000-)	Seal Kit, Cart Cp	1
▲▲	12	79740	(000000-)	Seal Kit, Coil Cp	1
▲	13	21916	(000000-)	Coil, 12V	5
▲	14	79735	(000000-)	Plug, Orifice Cp	2
▲	15	79736	(000000-)	Plug, Orifice Cp	1
▲	16	79723	(000000-)	Plug, Orifice Cp	1
▲	17	79737	(000000-)	Plug, Orifice Cp	1
▲	18	79726	(000000-)	Spring, Conical Cp	2
▲	19	79727	(000000-)	Ball, .313 Dia. Cp	2
▲	20	13902	(000000-)	Plug #2	22
▲	21	74098	(000000-)	Plug #4	6
▲	22	13904	(000000-)	Plug #6	4
▲	23	13907	(000000-)	Plug #8	2
▲	24	79738	(000000-)	Screw Cap Cp	3
▲▽	25	21922	(000000-)	Plug, Orifice Cp	1
▲▽	26	21931	(000000-)	Cart, Psi Control	1
▲▲	27	79731	(000000-)	Nut, Cart., Lng Cp	1
▲▲	28	21923	(000000-)	Spacer, Coil Cp	1
▲▲	29	79711	(000000-)	Seal Kit, Cart	1
▲▲	30	79740	(000000-)	Seal Kit, Coil	1
▲	31	21920	(000000-)	Plug, Orifice [Cp]	1

Fig. 19 - Hydraulic Solenoid Valve Breakdown, 1032232

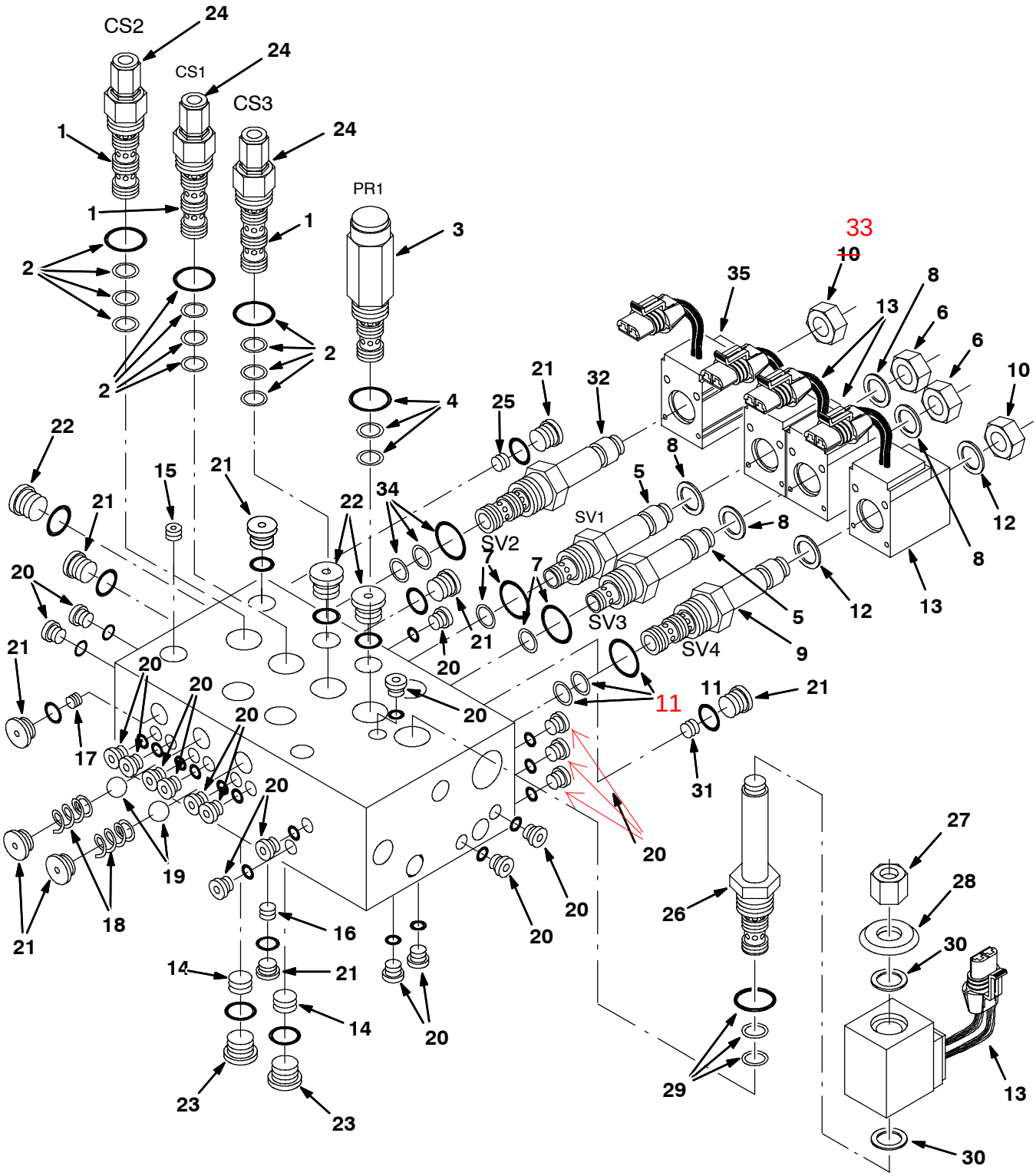

354559 - ALL

Fig. 19 - Hydraulic Solenoid Valve Breakdown, 1032232

	Ref.	Part No.	Serial Number	Description	Qty.
▽		1032232	(000000-)	Valve, Hyd, Solenoid, 12vdc 0280psi	1
▲▽	1	79722	(000000-)	Cart,Logic Cntl Cp	3
▲▲	2	79711	(000000-)	Seal Kit, Cart Cp	1
▲▽	3	21977	(000000-)	Cart.Psi Ct Cp	1
▲▲	4	79711	(000000-)	Seal Kit, Cart Cp	1
▲▽	5	79716	(000000-)	Valve Stem	2
▲▲	6	79728	(000000-)	Nut, Cart., Sht Cp	1
▲▲	7	79711	(000000-)	Seal Kit, Cart Cp	1
▲▲	8	79740	(000000-)	Seal Kit, Coil Cp	1
▲▽	9	79718	(000000-)	Valve Stem 3W2P	1
▲▲	10	79728	(000000-)	Nut, Cart., Sht Cp	1
▲▲	11	79711	(000000-)	Seal Kit, Cart Cp	1
▲▲	12	79740	(000000-)	Seal Kit, Coil Cp	1
▲	13	21916	(000000-)	Coil, 12V	4
▲	14	79735	(000000-)	Plug, Orifice Cp	2
▲	15	373482	(000000-)	Plug, Orifice	1
▲	16	79723	(000000-)	Plug, Orifice Cp	1
▲	17	79737	(000000-)	Plug, Orifice Cp	1
▲	18	79726	(000000-)	Spring, Conical Cp	2
▲	19	79727	(000000-)	Ball, .313 Dia. Cp	2
▲	20	13902	(000000-)	Plug #2	19
▲	21	74098	(000000-)	Plug #4	8
▲	22	13904	(000000-)	Plug #6	3
▲	23	13907	(000000-)	Plug #8	2
▲	24	79738	(000000-)	Screw Cap Cp	3
▲▽	25	373682	(000000-)	Plug, Orifice	1
▲▽	26	21931	(000000-)	Cart, Psi Control	1
▲▲	27	79731	(000000-)	Nut, Cart., Lng Cp	1
▲▲	28	21923	(000000-)	Spacer, Coil Cp	1
▲▲	29	79711	(000000-)	Seal Kit, Cart	1
▲▲	30	79740	(000000-)	Seal Kit, Coil	1
▲	31	21920	(000000-)	Plug, Orifice [Cp]	1
▲▽	32	373624	(000000-)	Valve, Stem, No	1
▲▲	33	373611	(000000-)	Nut, Solenoid	1
▲▲	34	373590	(000000-)	Seal Kit, Cartridge	1
▲	35	373622	(000000-)	Solenoid, 12vdc, W/ Mp	1

Fig. 20 – Extended Scrub Pump Breakdown, 379001

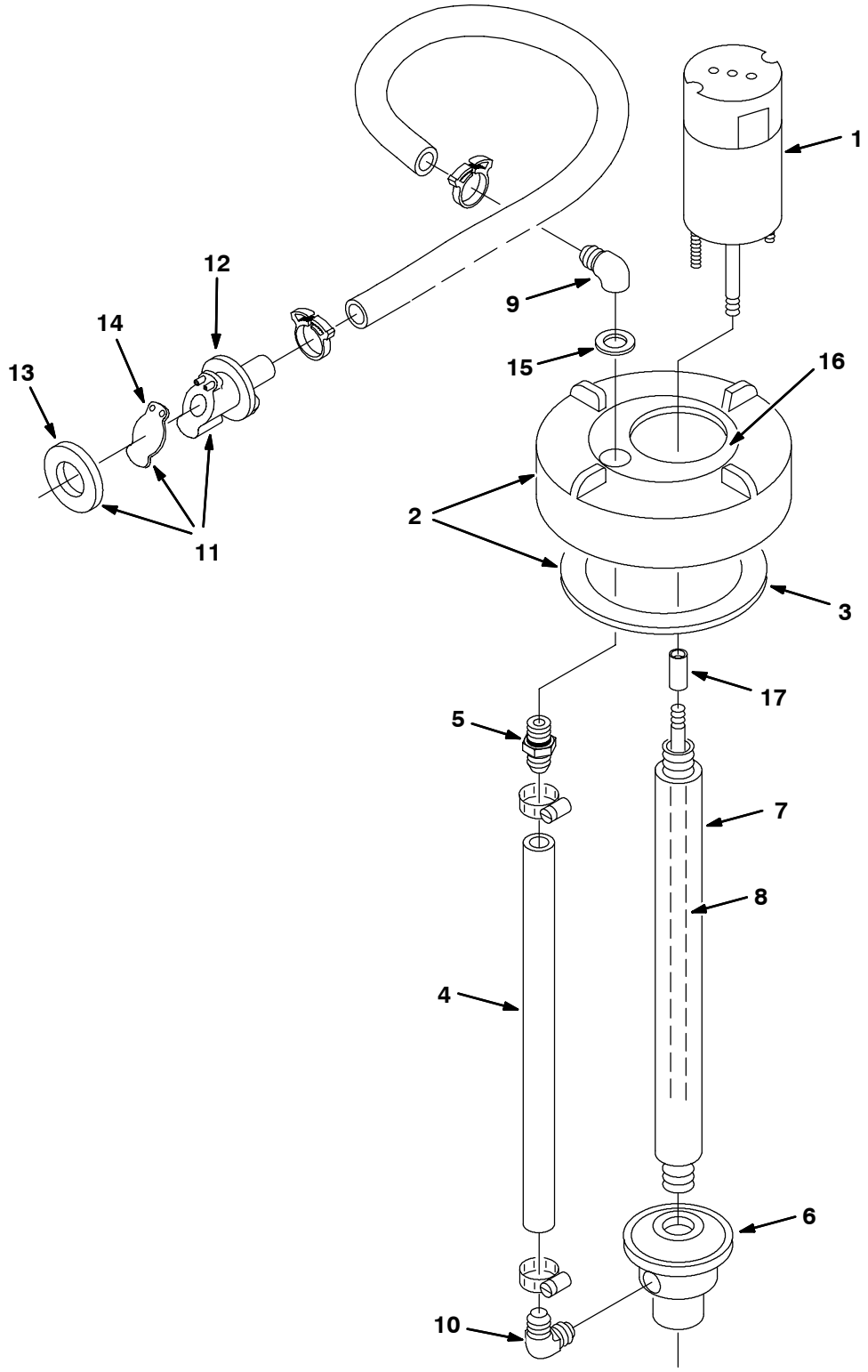

09672 - ALL

Fig. 20 – Extended Scrub Pump Breakdown, 379001

	Ref.	Part No.	Serial Number	Description	Qty.
▽		379001	(000000–)	Pump, Column, Es	1
▲▽	1	23282	(000000–)	Motor 12V Dc	1
▲▲		78829	(000000–)	Brush Kit	1
▲	2	24358	(000000–)	Cap Assy, Tank	1
▲	3	1031699	(000000–)	Gasket, 4.05id 5.29od .19 [Buna]	1
▲	4	78833	(000000–)	Tubing, Vinyl	1
▲	5	78398	(000000–)	Fitting, Plstc, Str	1
▲	6	78843	(000000–)	Pump Body Kit	1
▲	7	78836	(000000–)	Column, Pump	1
▲	8	23283	(000000–)	Pump Shaft	1
▲	9	78838	(000000–)	Fitting, Elbow Gr	1
▲	10	78839	(000000–)	Fitting, Elbow Gr	1
▲▽	11	78842	(000000–)	Check Valve Kit	1
▲▲	12	78840	(000000–)	Valve, Check	1
▲▲	13	73342	(000000–)	Gasket, Check Valve	1
▲▲	14	78841	(000000–)	Flapper, Valve	1
▲	15	78830	(000000–)	Washer, Rubber	1
▲	16	22790	(000000–)	Insert, Cap	1
▲	17	23285	(000000–)	Sleeve Gr	1

Fig. 21 - Extended Scrub Pump Breakdown, 20891

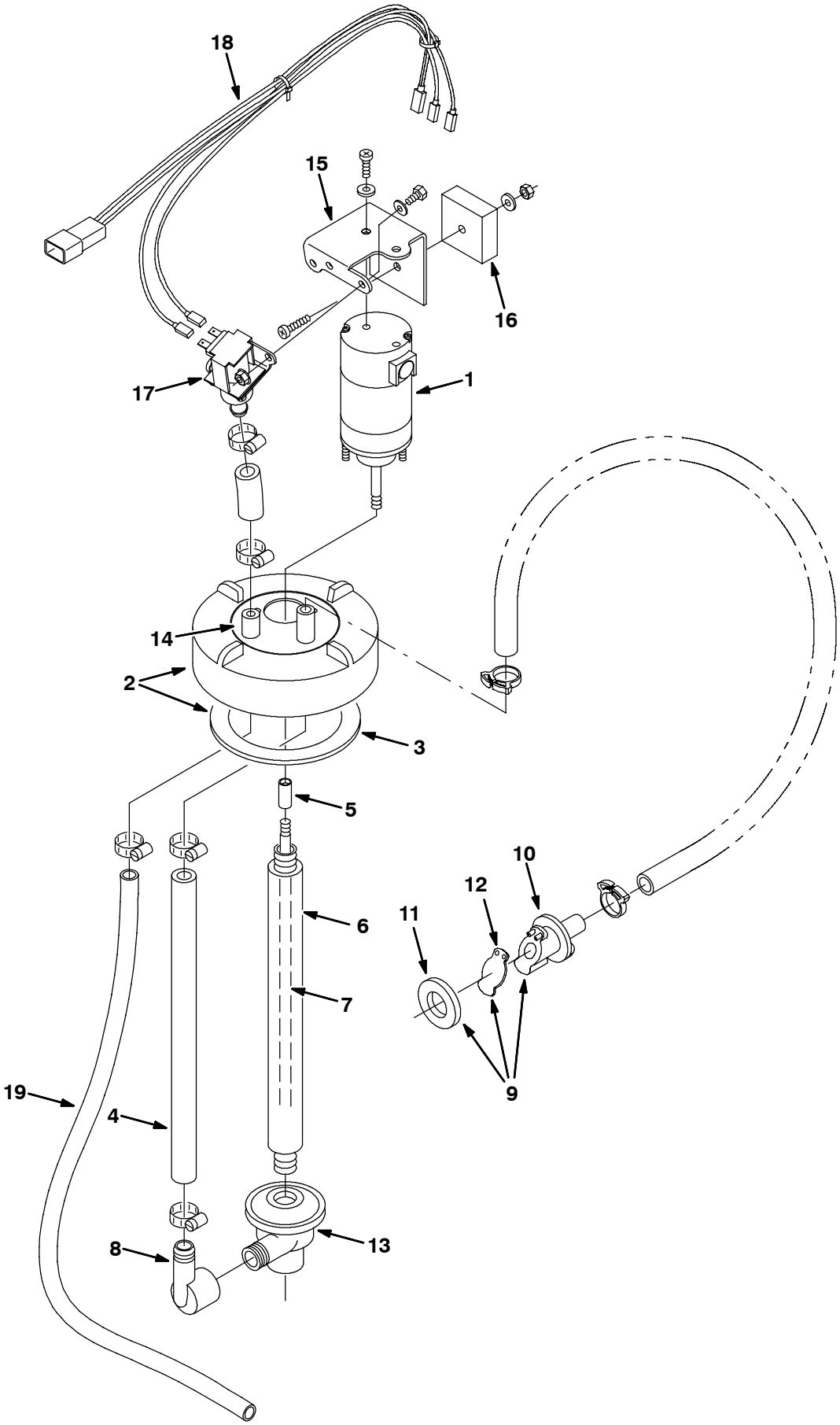

352370 - ALL

Fig. 21 - Extended Scrub Pump Breakdown, 20891

	Ref.	Part No.	Serial Number	Description	Qty.
▽		20891	(000000-)	Pump, Water	1
▲▽	1	23282	(000000-)	Motor 12V Dc	1
▲▲		78829	(000000-)	Kit, Brush	1
▲▽	2	24358	(000000-)	Cap, Tank	1
▲▲	3	1031699	(000000-)	Gasket, 4.05id 5.29od .19 [Buna]	1
▲	4	78833	(000000-)	Tubing, Vinyl	1
▲	5	23285	(000000-)	Sleeve	1
▲	6	78836	(000000-)	Column	1
▲	7	23283	(000000-)	Shaft, Pump	1
▲	8	78839	(000000-)	Fitting	1
▲▽	9	78842	(000000-)	Check Valve Kit	1
▲▲	10	78840	(000000-)	Valve, Check	1
▲▲	11	73342	(000000-)	Gasket	1
▲▲	12	78841	(000000-)	Flapper, Valve	1
▲	13	78843	(000000-)	Pump Body Kit	1
▲	14	20892	(000000-)	Backflush,Cover Lid	1
▲	15	20885	(000000-)	Bracket, Solenoid Valve	1
▲	16	20989	(000000-)	Timer, Backflush	1
▲	17	369850	(000000-)	Valve, Water, Sol, 12vdc, 10bm/10bm	1
▲	18	20988	(000000-)	Wireharness, Backflush	1
▲	19	20778	(000000-)	Hose, Vinyl, Clear	1

Fig. 22 - Extended Scrub Pump Breakdown, 1021210

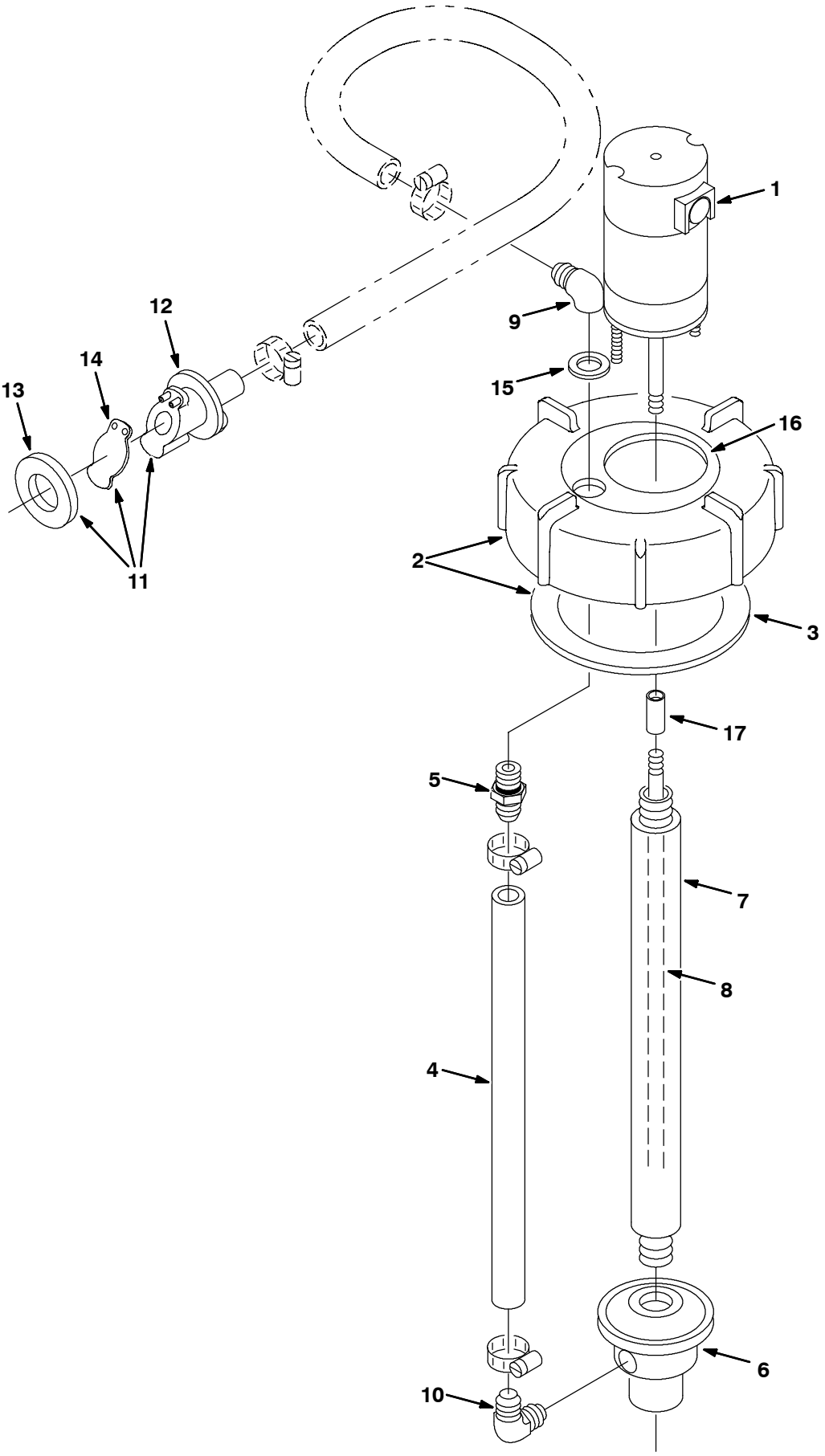

354377 - ALL

Fig. 22 - Extended Scrub Pump Breakdown, 1021210

	Ref.	Part No.	Serial Number	Description	Qty.
▽		1021210	(000000-)	Pump Assy, Column, Es	1
▲▽	1	9002708	(000000-)	Motor, Ele, 12vdc, Pump, Water	1
▲▲		78829	(000000-)	Kit, Brush, Motor, Ele	1
▲▽	2	24358	(000000-)	Cap Assy, Tank, Drain	1
▲▲	3	1031699	(000000-)	Gasket, 4.05id 5.29od .19 [Buna]	1
▲	4	78833	(000000-)	Tube, Vinyl, Pump, Water	1
▲	5	78398	(000000-)	Fitting, Plstc, Str, Bm12/Pm08, Nyl	1
▲	6	78843	(000000-)	Housing Kit, Pump, Water	1
▲	7	78836	(000000-)	Column, Pump, Water	1
▲	8	9002709	(000000-)	Shaft, Pump, Water	1
▲	9	78838	(000000-)	Fitting, E, Gr	1
▲	10	78839	(000000-)	Fitting, Plstc, E90, Pf Bm [Es Pump]	1
▲▽	11	78842	(000000-)	Kit, Valve, Check, Pump, Water	1
▲▲	12	78840	(000000-)	Valve, Check, Pump, Water	1
▲▲	13	73342	(000000-)	Gasket, .25 1.88d 1.0id [Poron]	1
▲▲	14	78841	(000000-)	Flapper, Valve, Pump, Water	1
▲	15	78830	(000000-)	Washer, Rbr	1
▲	16	22790	(000000-)	Insert, Cap, Mount, Es Pump	1
▲	17	23285	(000000-)	Sleeve, Pump, Water	1

Fig. 23 - Hydraulic Flow Sensor Switch Breakdown, 73430

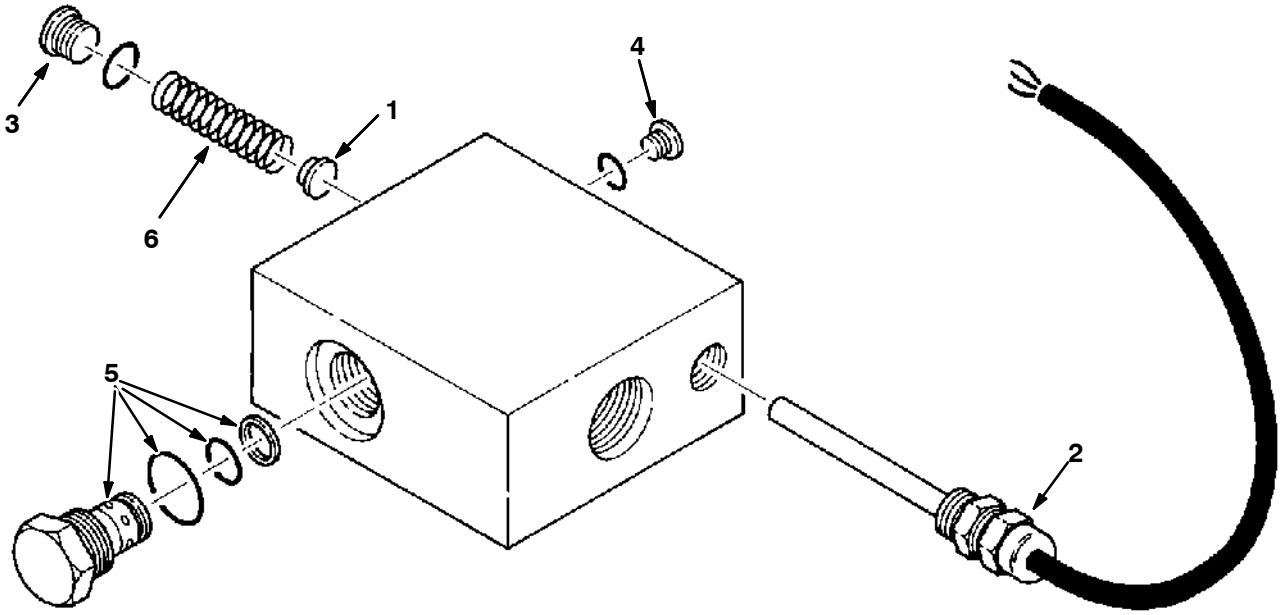

10854 - ALL

	Ref.	Part No.	Serial Number	Description	Qty.
▽		73430	(000000-)	Switch, Hyd Flow Sensor	1
▲	1	79713	(000000-)	Cushion, Piston	1
▲	2	79714	(000000-)	Switch Assy	1
▲	3	13904	(000000-)	Plug Gage #6	1
▲	4	13902	(000000-)	Plug #2	1
▲	5	79710	(000000-)	Cart, Check Vlv	1
▲	6	79715	(000000-)	Spring	1

Fig. 24 - Metering Solution Pump Breakdown, 73260

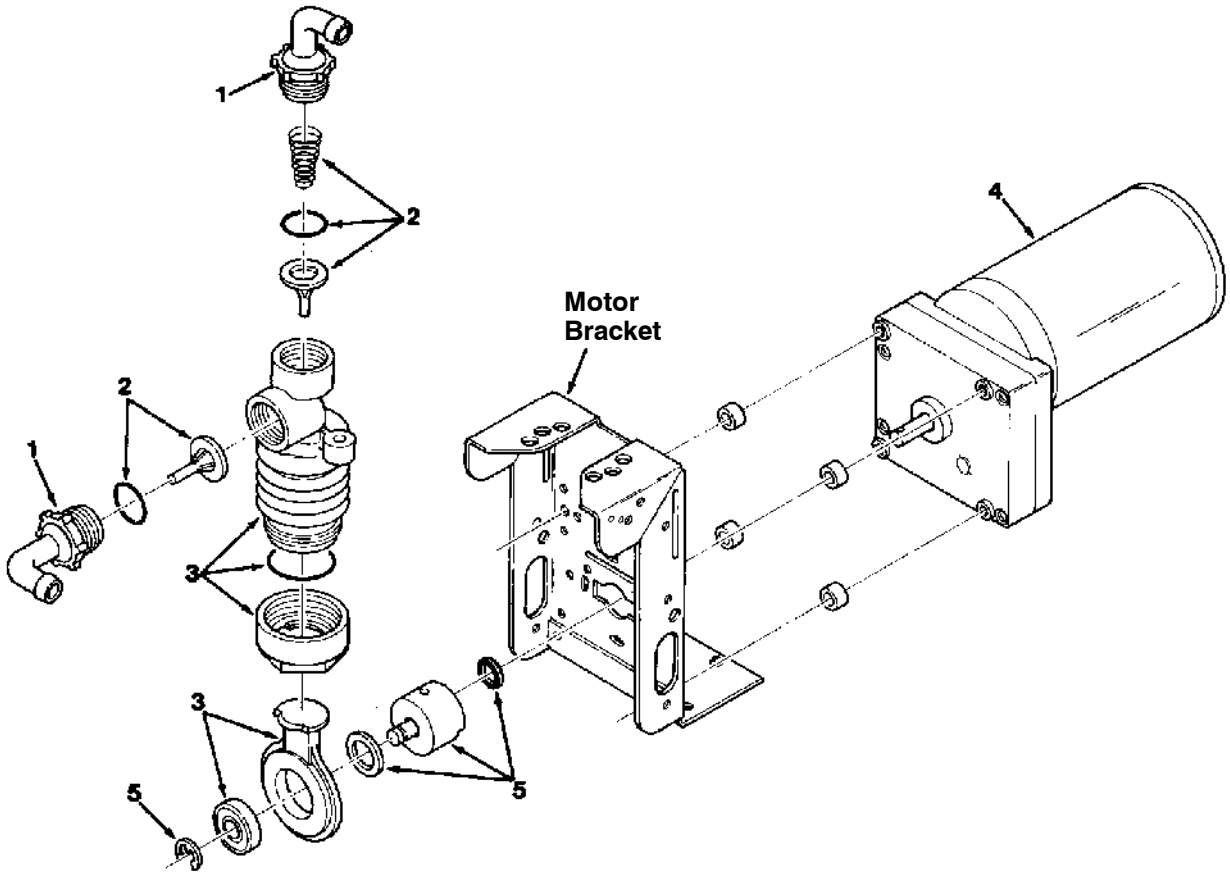

00112 - ALL

	Ref.	Part No.	Serial Number	Description	Qty.
▽		73260	(000000-)	Pump, Detergent Metering	1
▲	1	63923	(000000-)	Tubing Connctr.Kit, Pmp	1
▲	2	21659	(000000-)	Valve Kit, Poppet	1
▲	3	21657	(000000-)	Bellows Kit Gr	1
▲	4	78875	(000000-)	Gear Motor Assy	1
▲	5	02430	(000000-)	Crank Replmt.Kit,Pump F/79323	1

Fig. 25 - LPG EFI Breakdown, 371894

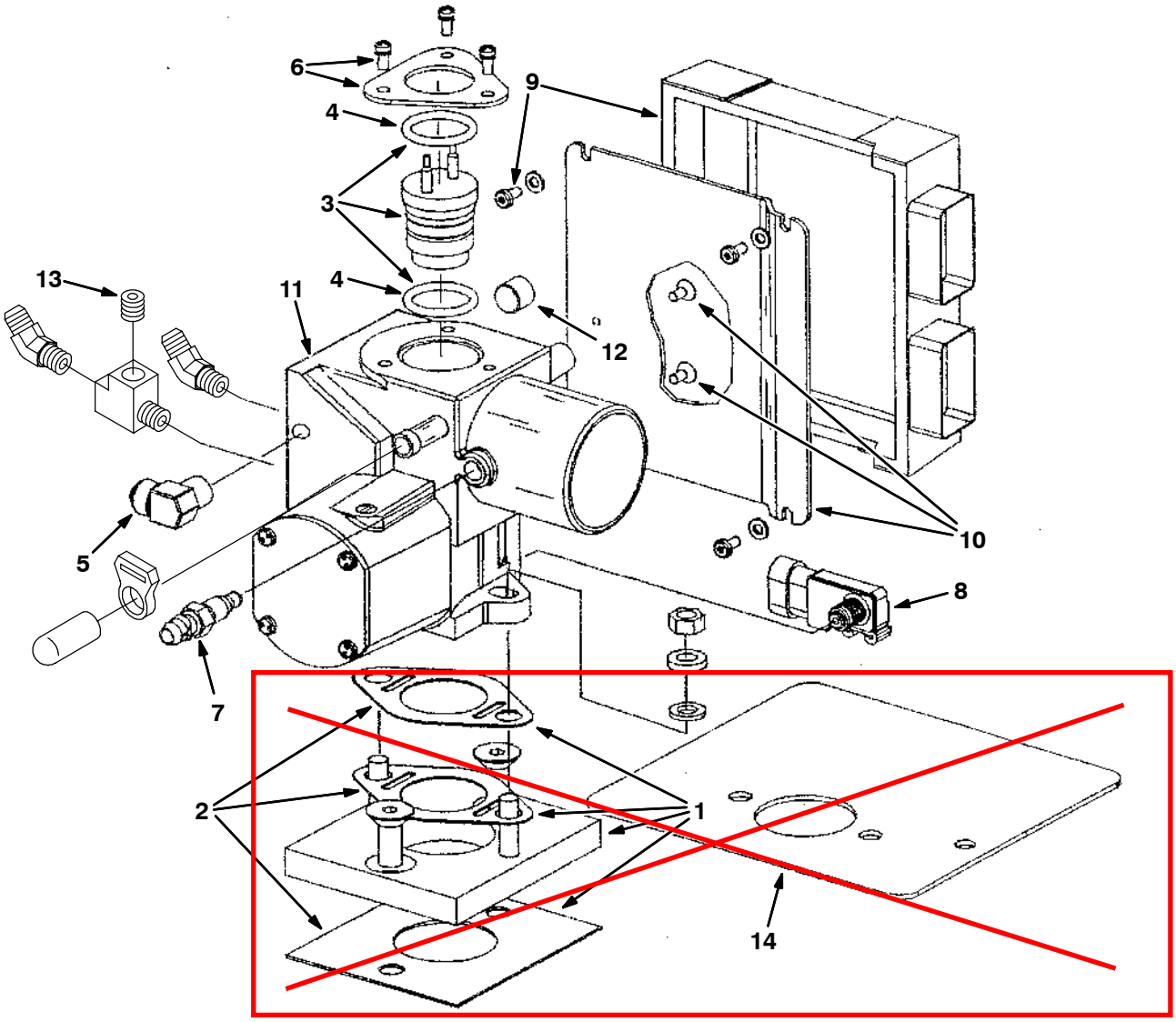

these parts are NOT included in this kit

353893 - 8410, LP

Fig. 25 - LPG EFI Breakdown, 371894

	Ref.	Part No.	Serial Number	Description	Qty.
▽		371894	(000000-)	Housing Assy, Throttle, Lpg, [With Ecu]	1
~~▲▽~~	~~1~~	~~371646~~	~~(000000-)~~	~~Kit, Adaptor, Manifold~~	~~1~~
~~▲▲~~	~~2~~	~~371647~~	~~(000000-)~~	~~Kit, Gasket, Manifold~~	~~1~~
▲▽	3	1017270	(000000-)	Injector, Fuel, Lpg [3.0l Gm] 8410	1
▲▲	4	371665	(000000-)	Kit, Org, Injector, Top And Bottom, Lpg	1
▲	5	371666	(000000-)	Fitting, Fuel Inlet, Lpg	1
▲	6	371651	(000000-)	Plate, Injector Mtg, W/ Screw	1
▲	7	371653	(000000-)	Sensor, Temp	1
▲		371714	(000000-)	Kit, Connector, Coolant Sensor	1
▲		371715	(000000-)	Kit, Connector, Sensor, [Iat]	1
▲	8	371654	(000000-)	Sensor, Manifold Press	1
▲		371713	(000000-)	Kit, Connector, Sensor, [Map]	1
▲	9	9000823	(000000-)	Kit, Replmt, Controller	1
▲	10	391891	(000000-)	Plate, Mtg, W/ Screw, [Ecu], Lpg	1
▲	11	371669	(000000-)	Housing, Throttle, Lpg	1
▲		371718	(000000-)	Kit, Connector, Govnr	1
▲	12	371660	(000000-)	Fitting, Coolant Plug	1
▲	13	10552	(000000-)	Fitting, Pipe, Plug, Pm02 Soc Head	1
~~▲~~	~~14~~	~~371658~~	~~(000000-)~~	~~Shield, Heat~~	~~1~~

Fig. 26 - LPG EFI Breakdown, 371895

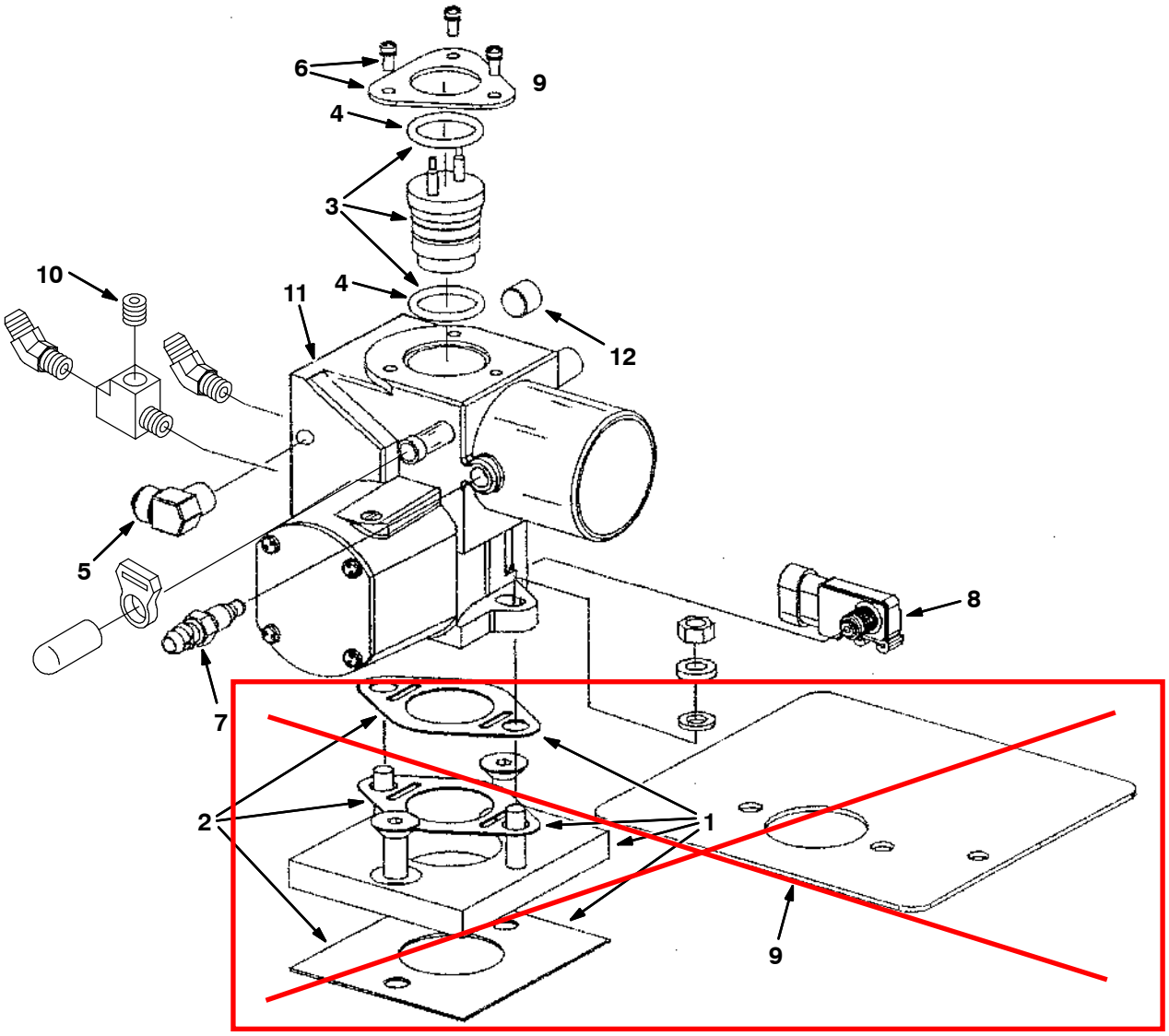

these parts are NOT included in this kit

353893 - 8410, LP

Fig. 26 - LPG EFI Breakdown, 371895

	Ref.	Part No.	Serial Number	Description	Qty.
▽		371895	(000000-)	Housing Assy, Throttle, Lpg, [Without Ecu]	1
▲▽	1	371646	(000000-)	Kit, Adaptor, Manifold	1
▲▲	2	371647	(000000-)	Kit, Gasket, Manifold	1
▲▽	3	1017270	(000000-)	Injector, Fuel, Lpg [3.0l Gm] 8410	1
▲▲	4	371665	(000000-)	Kit, Org, Injector, Top And Bottom, Lpg	1
▲	5	371666	(000000-)	Fitting, Fuel Inlet, Lpg	1
▲	6	371651	(000000-)	Plate, Injector Mtg, W/ Screw	1
▲	7	371653	(000000-)	Sensor, Temp	1
▲		371714	(000000-)	Kit, Connector, Coolant Sensor	1
▲		371715	(000000-)	Kit, Connector, Sensor, [Iat]	1
▲	8	371654	(000000-)	Sensor, Manifold Press	1
▲		371713	(000000-)	Kit, Connector, Sensor, [Map]	1
▲	9	371658	(000000-)	Shield, Heat	1
▲	10	10552	(000000-)	Fitting, Pipe, Plug, Pm02 Soc Head	1
▲	11	371669	(000000-)	Housing, Throttle, Lpg	1
▲		371718	(000000-)	Kit, Connector, Govnr	1
▲	12	371660	(000000-)	Fitting, Coolant Plug	1

Fig. 27 - Gasoline EFI Breakdown, 371896

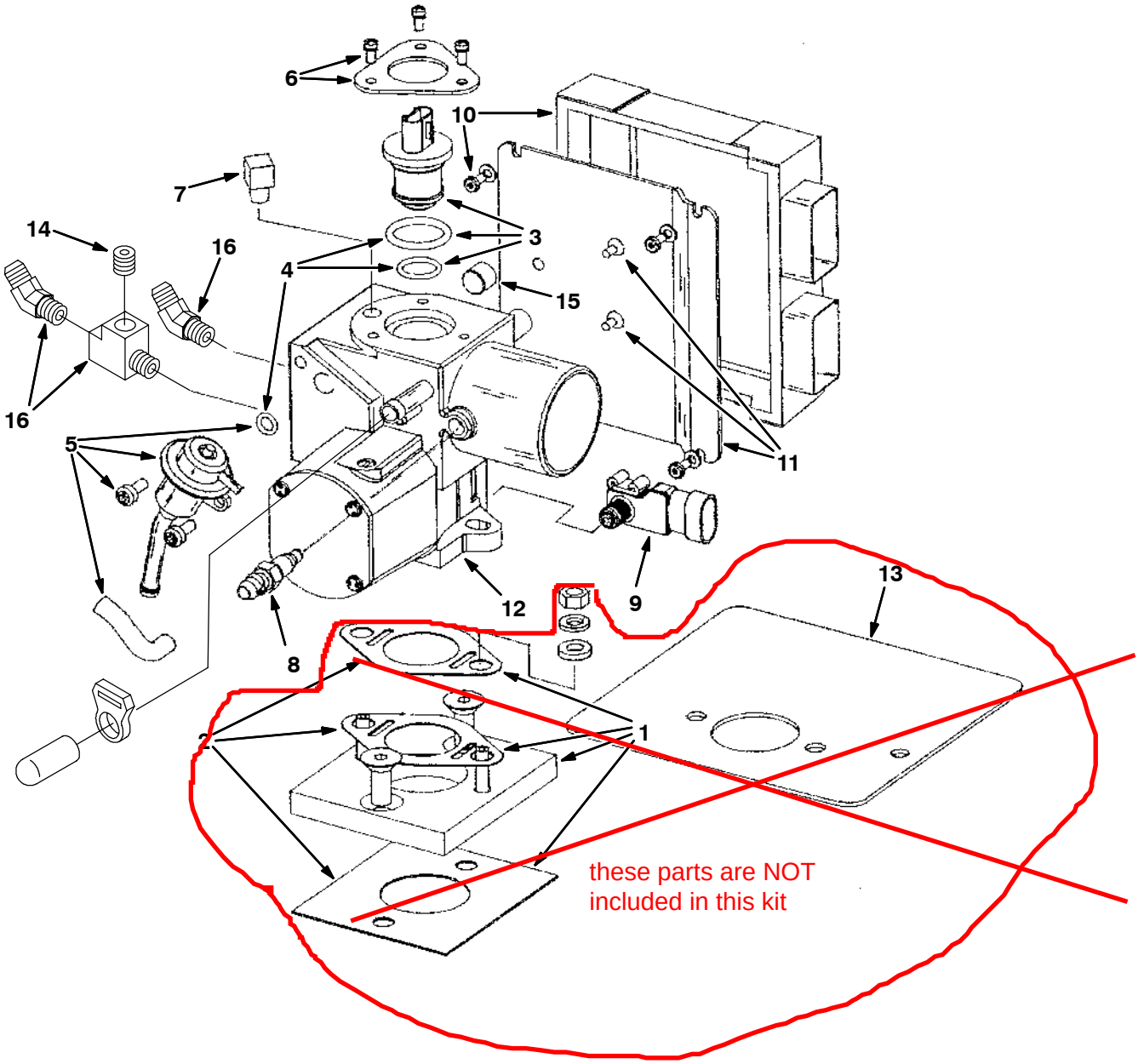

8410, G

Fig. 27 - Gasoline EFI Breakdown, 371896

	Ref.	Part No.	Serial Number	Description	Qty.
▽		371896	(000000-)	Housing Assy, Throttle, Gas, [With Ecu]	1
~~▲▽~~	~~1~~	~~371646~~	~~(000000-)~~	~~Kit, Adaptor, Manifold~~	~~1~~
~~▲▲~~	~~2~~	~~371898~~	~~(000000-)~~	~~Kit, Gasket, Manifold~~	~~1~~
▲▽	3	371899	(000000-)	Injector, Gas, W/ Top And Bottom Org	1
▲▲	4	371649	(000000-)	Kit, Org, Injector And Reg, Gas	1
▲		371716	(000000-)	Kit, Connector, Gas Injector	1
▲	5	371908	(000000-)	Kit, Reg, Gas Press	1
▲	6	371651	(000000-)	Plate, Injector Mtg, W/ Screw	1
▲	7	15555-2	(000000-)	Fitting, Brs, E90, If05/Pm04	1
▲		371714	(000000-)	Kit, Connector, Coolant Sensor	1
▲		371715	(000000-)	Kit, Connector, Sensor, [Iat]	1
▲	8	371653	(000000-)	Sensor, Temp	1
▲	9	371654	(000000-)	Sensor, Manifold Press	1
▲	10	371901	(000000-)	Control, Electonic, Gas	1
▲	11	391890	(000000-)	Plate, Mtg, W/ Screw, [Ecu], Gas	1
▲	12	371902	(000000-)	Housing, Throttle, Gas	1
▲		371718	(000000-)	Kit, Connector, Govnr	1
~~▲~~	~~13~~	~~371658~~	~~(000000)~~	~~Shield, Heat~~	~~1~~
▲	14	10552	(000000-)	Fitting, Pipe, Plug, Pm02 Soc Head	1
▲	15	371660	(000000-)	Fitting, Coolant Plug	1
▲	16		(000000-)	Kit, Ftg, Coolant	1

Fig. 28 - Gasoline EFI Breakdown, 371897

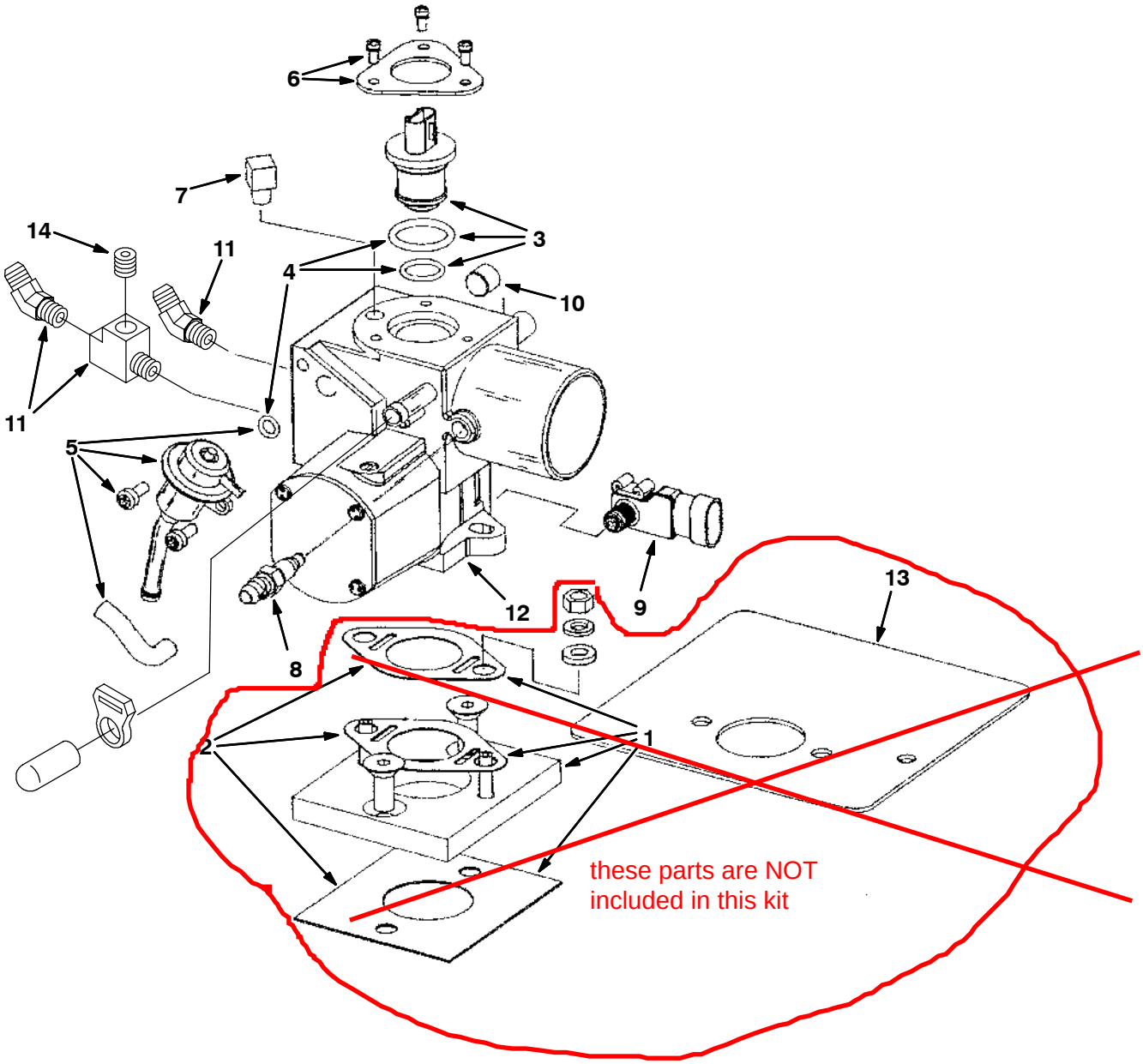

8410, G

Fig. 28 - Gasoline EFI Breakdown, 371897

	Ref.	Part No.	Serial Number	Description	Qty.
▽		371897	(000000-)	Housing Assy, Throttle, Gas, [Without Ecu]	1
▲▽	1		(000000-)	Kit, Adaptor, Manifold	1
▲▲	2	371898	(000000-)	Kit, Gasket, Manifold	1
▲▽	3	371899	(000000-)	Injector, Gas, W/ Top And Bottom Org	1
▲▲	4	371649	(000000-)	Kit, Org, Injector And Reg, Gas	1
▲		371716	(000000-)	Kit, Connector, Gas Injector	1
▲	5	371908	(000000-)	Kit, Reg, Gas Press	1
▲	6	371651	(000000-)	Plate, Injector Mtg, W/ Screw	1
▲	7	15555-2	(000000-)	Fitting, Brs, E90, If05/Pm04	1
▲		371714	(000000-)	Kit, Connector, Coolant Sensor	1
▲		371715	(000000-)	Kit, Connector, Sensor, [Iat]	1
▲	8	371653	(000000-)	Sensor, Temp	1
▲	9	371654	(000000-)	Sensor, Manifold Press	1
▲	10	371660	(000000-)	Fitting, Coolant Plug	1
▲	11		(000000-)	Kit, Ftg, Coolant	1
▲	12	371902	(000000-)	Housing, Throttle, Gas	1
▲		371718	(000000-)	Kit, Connector, Govnr	1
▲	13	371658	(000000-)	Shield, Heat	1
▲	14	10552	(000000-)	Fitting, Pipe, Plug, Pm02 Soc Head	1

SECTION 5

Contents **Page**

Fig. 1 – Engine Block Group 5-2
Fig. 2 – Gaskets Group 5-4
Fig. 3 – Cylinder Head Group 5-6
Fig. 4 – Cylinder Front Cover Group 5-7
Fig. 5 – Starter Breakdown 5-8
Fig. 6 – Oil Pan Group 5-10
Fig. 7 – Crankshaft Group 5-12
Fig. 8 – Manifolds Group 5-14
Fig. 9 – Flywheel Group 5-16
Fig. 10 – Camshaft And Sprocket Group 5-18
Fig. 11 – Valve And Rocker Arm Cover Group . . 5-20
Fig. 12 – Piston And Connecting Rod Group . . . 5-22
Fig. 13 – Water Pump, Thermostat and Fan Group 5-23
Fig. 14 – Ignition Group 5-24

Fig. 1 - Engine Block Group

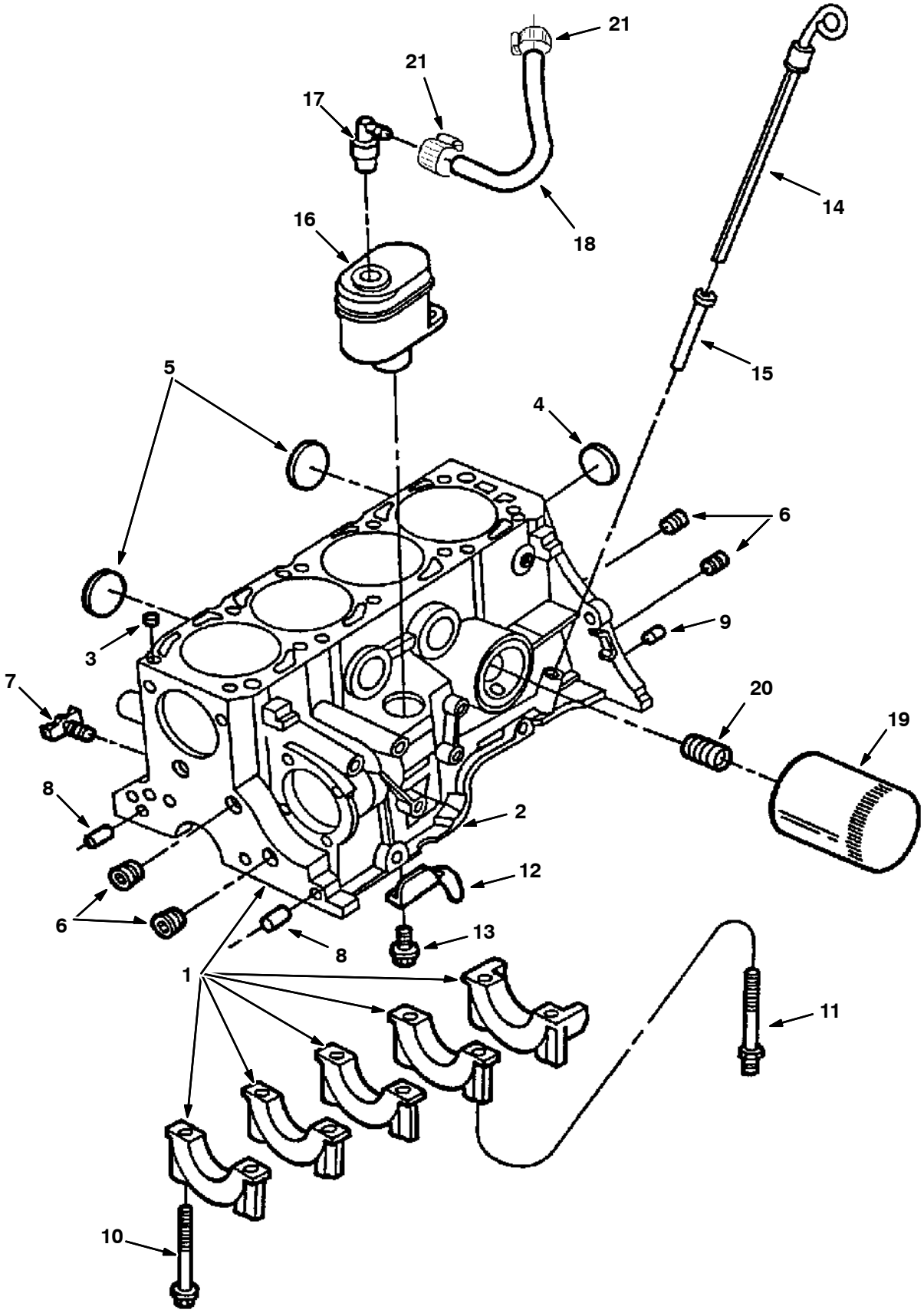

10525 - 800L, 8410, G, LP

Fig. 1 - Engine Block Group

	Ref.	Part No.	Description	Qty.
	1	84875	Cyl Block Assy (Short Block Assy)	1
▽	2	84876	Block Assy	1
▲	3	73958	Dowel	2
▲	4	73921	Plug-Std 2.078	1
▲	4	73920	Plug .06 O/S	-
▲	5	84877	Plug, 1.50 Cup	4
▲	6	73917	Plug 3/8 Npt	5
▲	6	36268	Plug 1/4 Npt	2
▲	7	54911-32	Draincock,End.Block	1
▲	8	84878	Dowel,Frnt Cover	2
▲	9	73975	Dowel	2
▲	10	73950	Bolt M12	9
▲	11	74516	Stud M12	1
▲	12	84879	Baffle	1
	13	84880	Bolt, M6X16.5mm	2
	14	10723	Indicator,Oil	1
	15	10724	Short Tube	1
	16	84882	Separator	1
	17	84883	Pcv Vlv Asy	1
	18	84884	Hose	1
	19	39703-2	Filter Element, Oil	1
	20	84962	Insert-Oilfilt	1
	21	54333	Clamp, Hose, Wormdrive	2

Fig. 2 - Gaskets Group

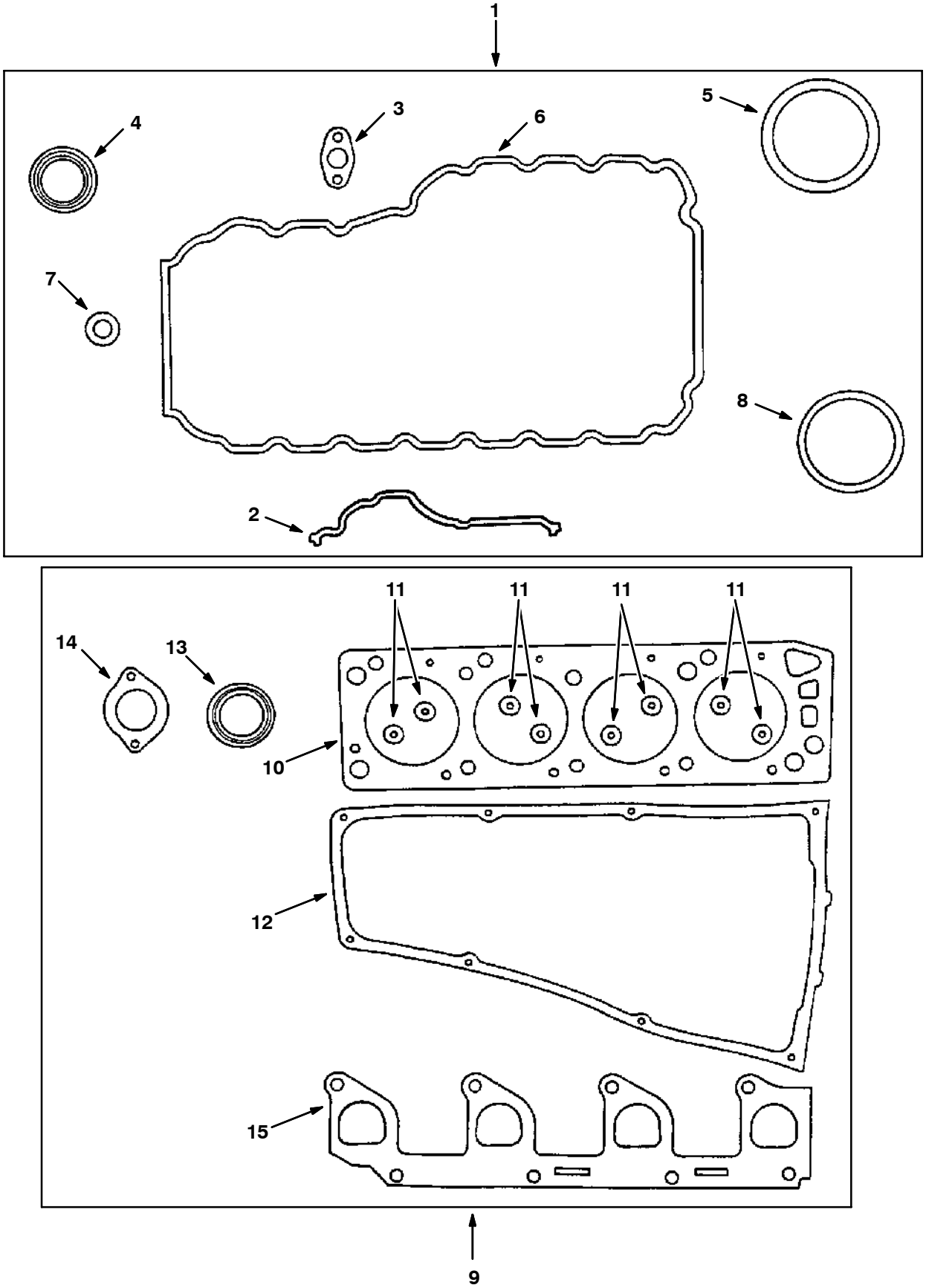

10444 - 800L, 8410, G, LP

Fig. 2 - Gaskets Group

	Ref.	Part No.	Description	Qty.
▽	1	84885	Gskt Kit,Lower	1
▲	2	84886	Gskt,Frnt Cvr	1
▲	3	84887	Gskt,Pmp/Putube	1
▲	4	60833	Oil Seal, Front	1
▲	5	84888	Seal, Rear	1
▲	6	84889	Gasket,Oil Pan	1
▲	7	37157	Gasket Oil	1
▲	8	84983	Gskt,Water Pump	1
▽	9	84891	Gskt Kit,Upper	1
▲	10	60806	Gasket, Head	1
▲	11	84892	Seal,Valve Stem	8
▲	12	84893	Gskt,Rockr Cvr	1
▲	13	60833	Oil Seal, Front	1
▲	14	74538	Gskt-Waterout	1
▲	15	84894	Gskt,In.Manfld	1

Fig. 3 - Cylinder Head Group

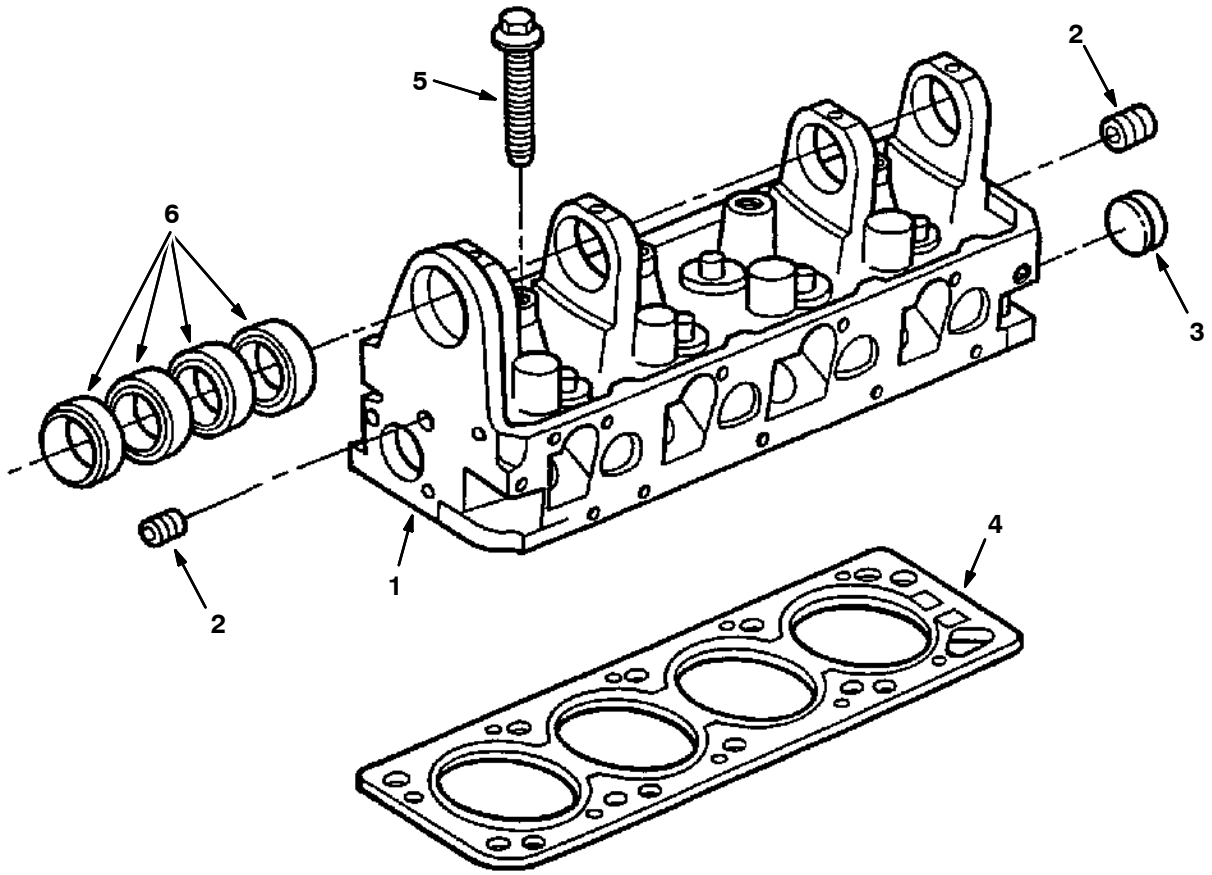

10445 - 800L, 8410, G, LP

Ref.	Part No.	Description	Qty.
1	84907	Head-W/O Valves	1
2	36268	Plug 1/4 Npt	2
3	84910	Plug,1.50 Cup	1
4	60806	Gasket, Head	1
5	73927	Bolt M12	10
6	60817	Bearing Cam,	4
6	73936	Bearing, .016 Camshaft	-

Fig. 4 - Cylinder Front Cover Group

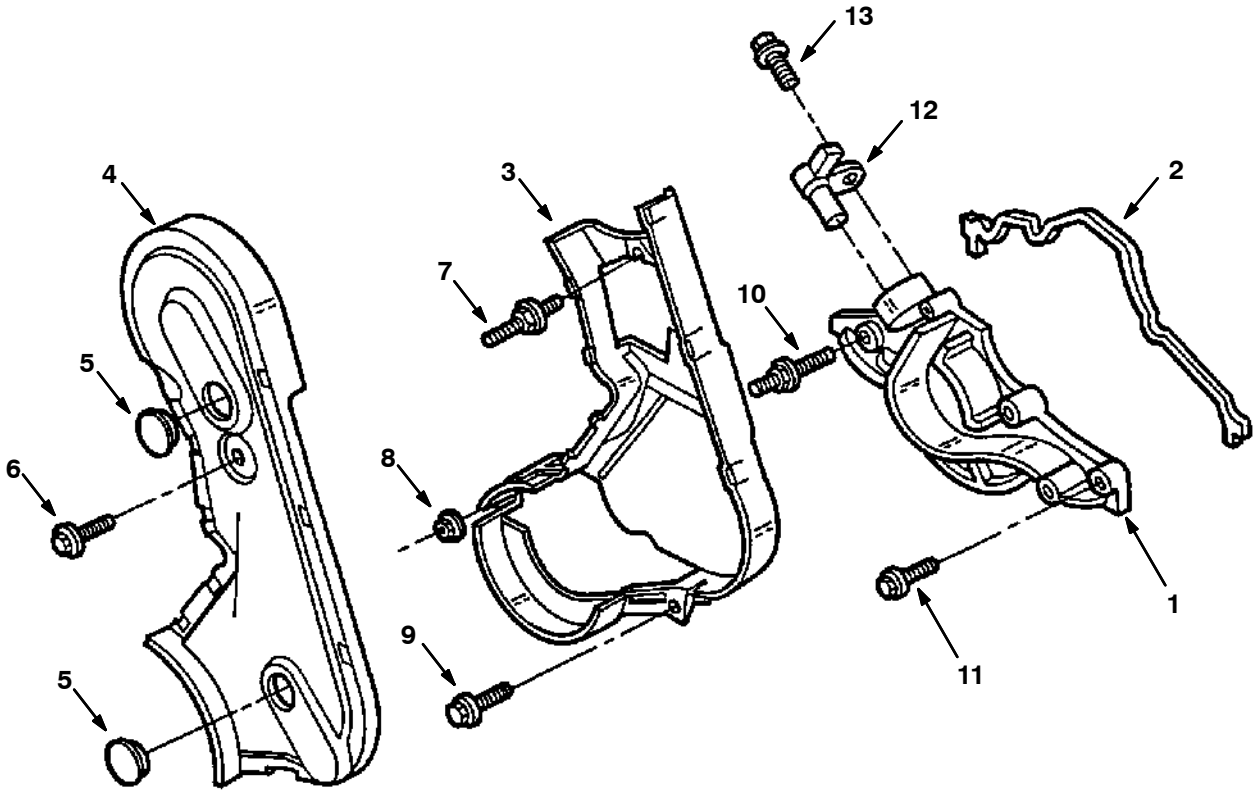

10446 - 800L, 8410, G, LP

Ref.	Part No.	Description	Qty.
1	84895	Lower Cover	1
2	84896	Gskt,Front Cvr	1
3	84897	Inner Cover	1
4	84898	Outer Cover	1
5	74536	Plug	2
6	84899	Bolt, M8 X 17 Schd	1
7	84900	Stud,M8X51.0mm	1
8	84901	Nut, M6	1
9	84902	Scr&Wsh,M6X22.5	1
10	84903	Stud,M6X61.8mm	1
11	84904	Bolt,M6X37.5mm	3
12	84905	Sensor,Crnksft	1
13	84906	Screw,M6X22.5mm	1

Fig. 5 - Starter Breakdown

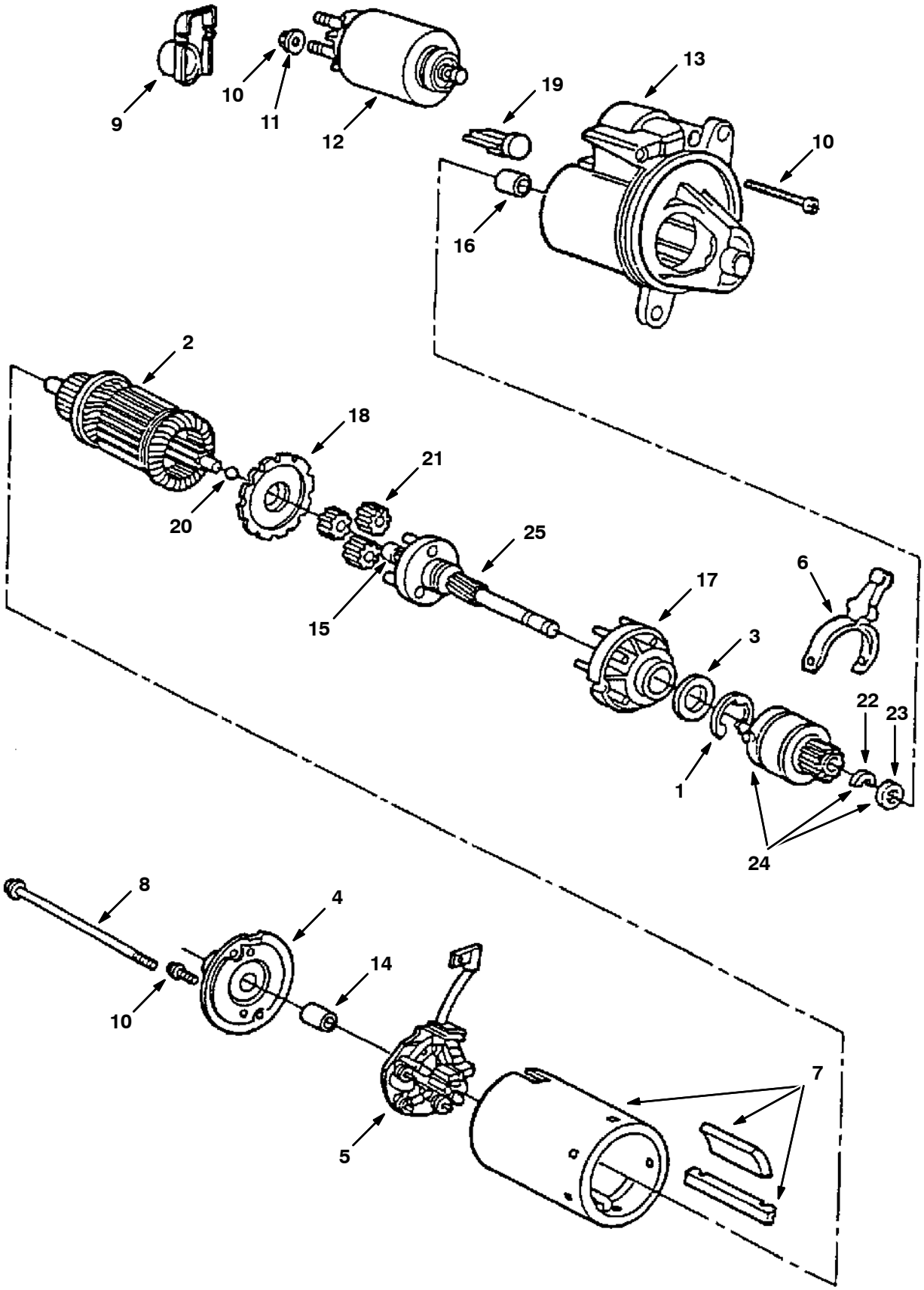

10523 - 800L, 8410, G, LP

Fig. 5 - Starter Breakdown

	Ref.	Part No.	Description	Qty.
▽		60938	Motor, Starting, Perm Mag, 12V	1
▲	1	79640	Retaining Ring	1
▲	2	84999	Armature	1
▲	3	79956	Washer	1
▲	4	79628	Plate & Brg	1
▲	5	79629	Brush Holder	1
▲	6	79630	Lever	1
▲	7	79631	Frame&Mag.As	1
▲	8	79632	Bolt-Thru	2
▲	9	79970	Term.Cover	1
▲▽	10	79633	Kit-Attaching	1
▲▲	11	79957	Nut&Washer,M8	1
▲	12	370829	Solenoid	1
▲	13	79634	Hsg W/Brg	1
▲	14	79635	Bearing	1
▲	15	79960	Planet Bearing	3
▲	16	79961	Bearing	1
▲	17	79962	Statnry Gear	1
▲	18	79963	Retnr.Gear	1
▲	19	79964	Seal	1
▲	20	79965	Arm.Thr.Ball	1
▲	21	79966	Gear Assy	3
▲	22	79636	Ring-Drv.Stop	1
▲	23	79967	Retainer	1
▲	24	79638	Drive Assy	1
▲	25	79969	Shft Asy,Output	1

Fig. 6 - Oil Pan Group

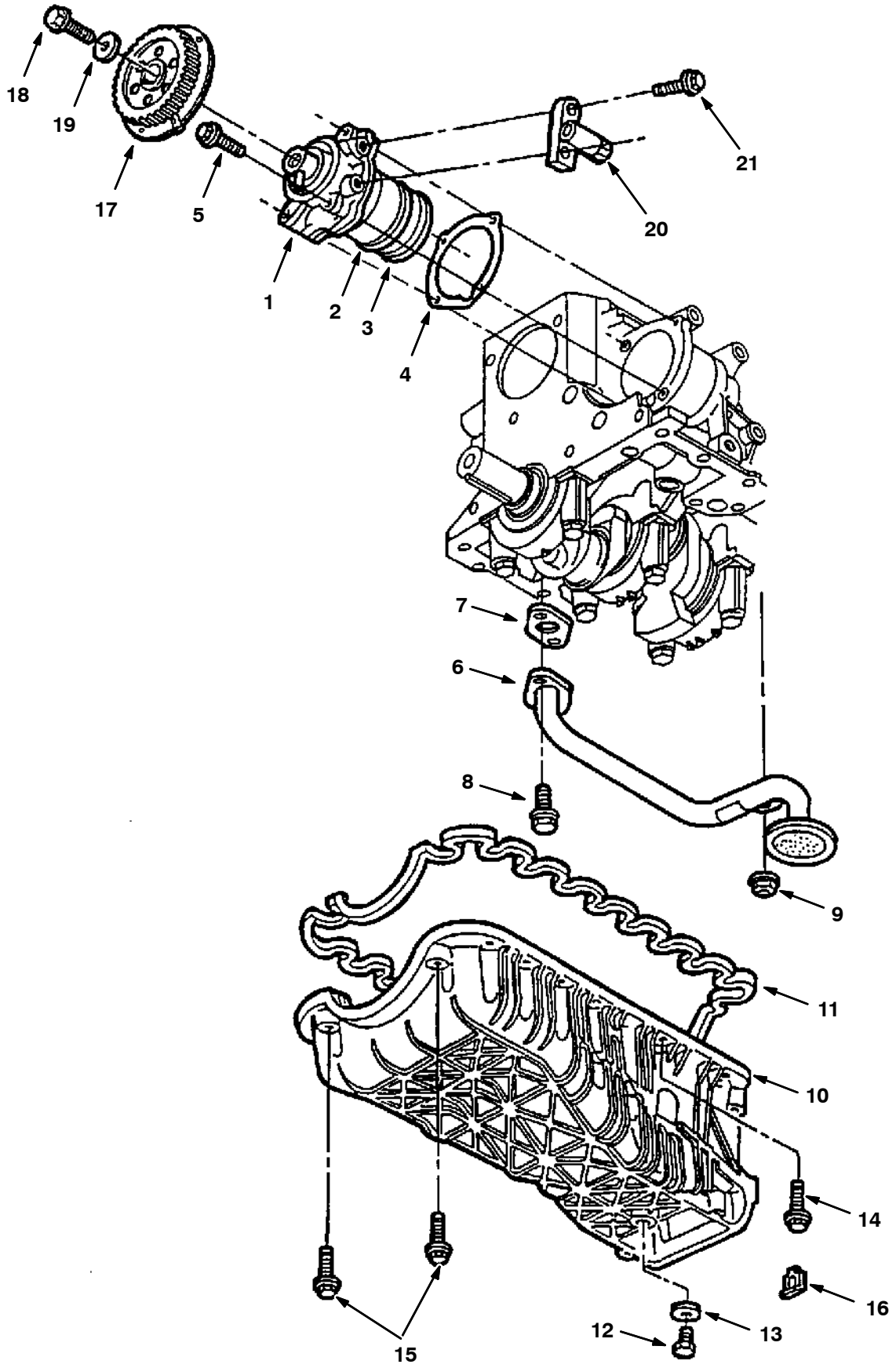

10522 - 800L, 8410, G, LP

Fig. 6 - Oil Pan Group

Ref.	Part No.	Description	Qty.
1	84963	Oil Pump	1
2	84964	O-Ring,2.375	1
3	84965	O-Ring-2.250	1
4	84966	Gskt,Oilpmp/Blk	1
5	84967	Bolt,M6X47.5mm	4
6	84968	Oil Pickup Tube	1
7	84969	Gskt,Pu Tube	1
8	84970	Bolt,M8X20.0mm	2
9	84971	Nut,M10	1
10	84972	Oil Pan Assy	1
11	84889	Gasket,Oil Pan	1
12	37127	Oil Plug	1
13	37157	Gasket Oil	1
14	84973	Bolt,M6X27.5mm	16
15	84974	Bolt,M6X52.5mm	2
16	84975	Oil Pan Spacer	-
16	84976	Oil Pan Spacer	-
16	84977	Oil Pan Spacer	-
17	84978	Oil Pmp Sprkt	1
18	84979	Bolt,M10X40.0mm	1
19	74561	Washer	1
20	84980	Camsft.Sensor	1
21	84981	Bolt,M5X20.0M	2

Fig. 7 - Crankshaft Group

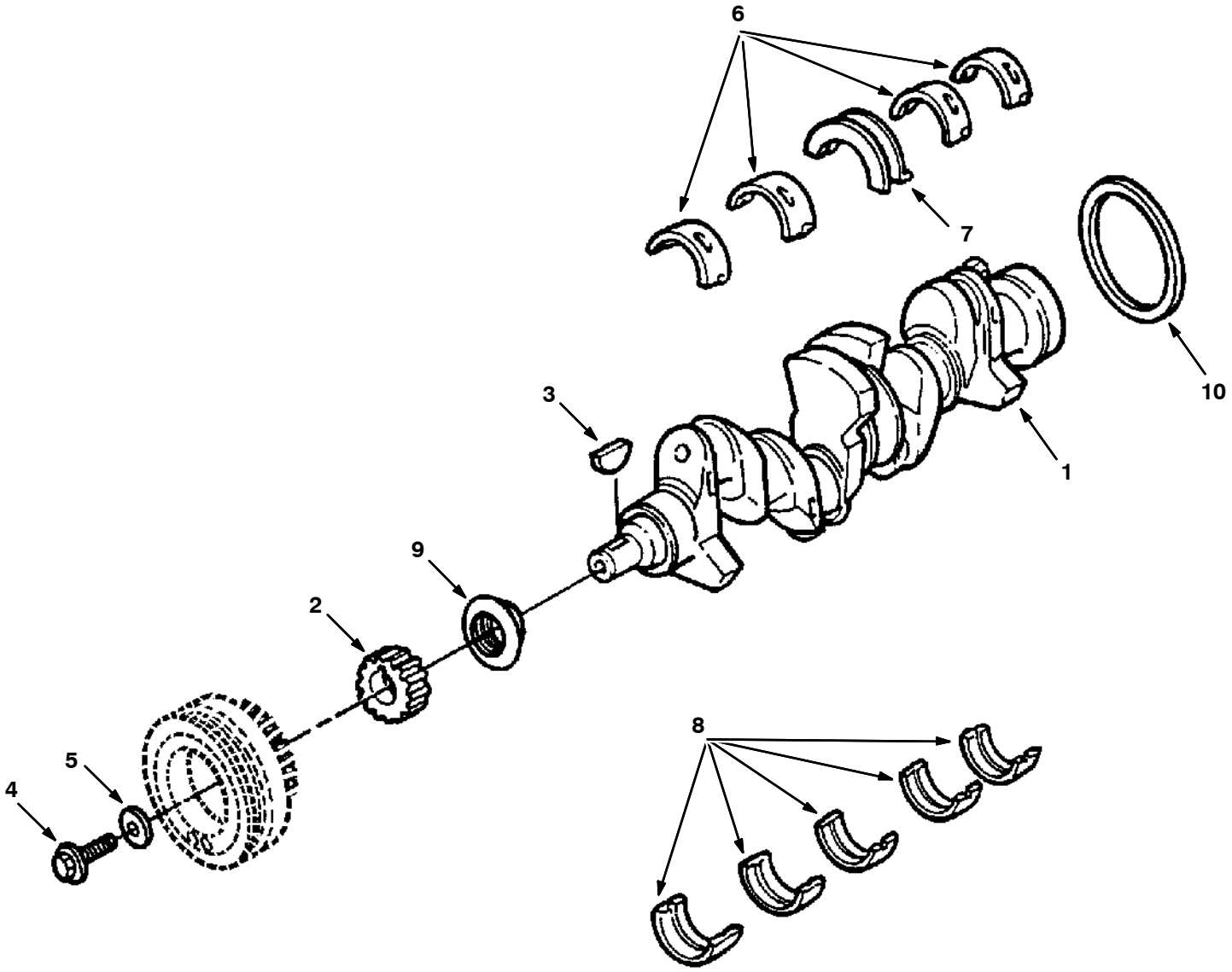

10526 - 800L, 8410, G, LP

Fig. 7 - Crankshaft Group

Ref.	Part No.	Description	Qty.
1	84923	Crankshaft Asy	1
2	84924	Crnksft Sprckt	1
3	84925	Crnkshaft Key	1
4	84926	Bolt,M14X55.0M	1
5	84927	Wash M15 1.53Od	1
6	84928	Main Brg,Stdred	4
6	84929	Main Brg,Stdblu	-
6	84930	Main Brg,.002 Upper	-
6	84931	Main Brg,.010 Upper	-
6	84932	Kit, Bearing Crankshaft	-
6	84933	Main Brg,.030 Upper	-
7	84934	Thr.Brg,Stdred	1
7	84937	Thr.Brg,Stdblue	-
7	84935	Thr.Brg,.002 Upper	-
7	84938	Thr.Brg,.010 Upper	-
7	84940	Thr.Brg,.030 Upper	-
8	84941	Main Brg,Stdred	5
8	84942	Main Brg,Stdblu	-
8	84943	Main Brg,.002 Lower	-
8	84944	Main Brg,.010 Lower	-
8	84946	Main Brg,.030 Lower	-
9	60833	Oil Seal, Front	1
10	84947	Crnksft Seal-Rear	1

Fig. 8 - Manifolds Group

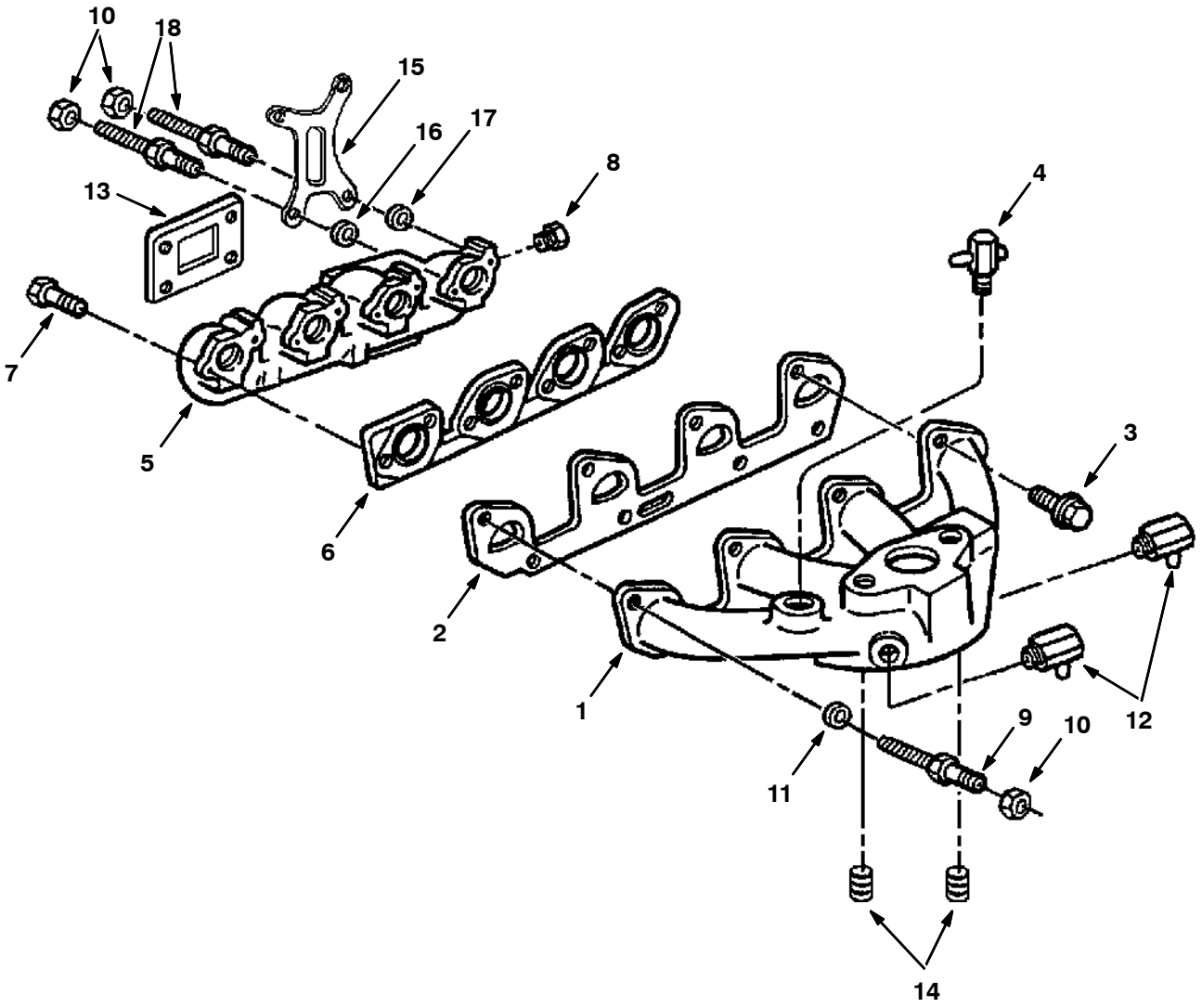

10529 - 800L, 8410, G, LP

Fig. 8 - Manifolds Group

Ref.	Part No.	Description	Qty.
1	84990	Int.Manifold	1
2	84991	Gskt,Int.Mnfld	1
3	84992	Bolt,M8X25.0mm	7
4	74527	Vac.Fitting	1
5	74509	Exh.Manifold	1
6	84995	Gskt,Exh.Mnfld	1
7	84996	Bolt,M10X55.0M	6
8	84997	Plug, 1/2Npt	1
9	79972	Stud	1
10	79973	Nut M8-1.25	3
11	79974	Spacer	1
12	84985	Elbow,90 deg	2
13	36048	Gasket, Exh. Flange	1
14	73917	Plug 3/8 NPT	2
15	79976	Lifting Eye	1
16	21792	Spacer	1
17	21793	Spacer	1
18	21794	Stud	2

Fig. 9 - Flywheel Group

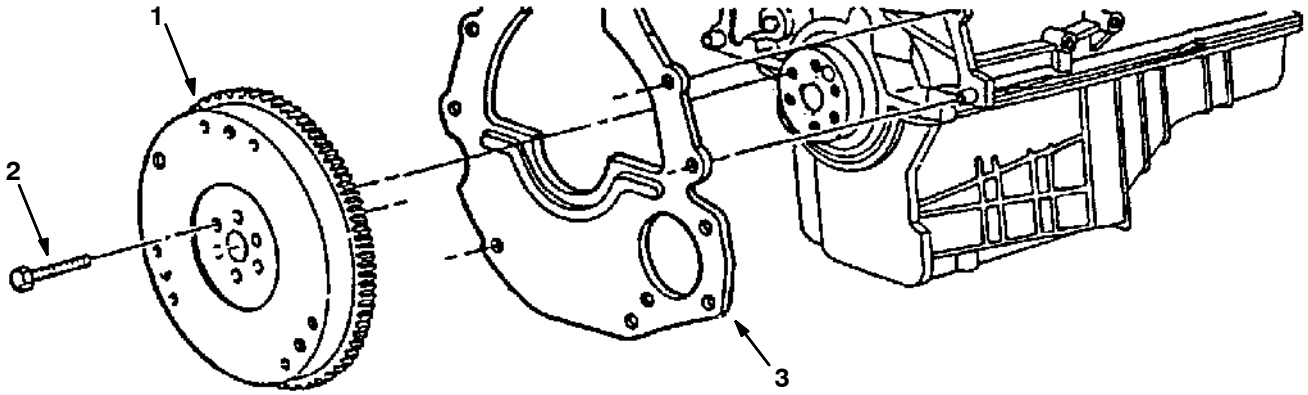

10527 - 800L, 8410, G, LP

Fig. 9 - Flywheel Group

Ref.	Part No.	Description	Qty.
1	370103	Replm Kit, Flywheel	1
	370102	Flywheel	1
	84659	Flywheel Ring Gear	1
2	64038	Bolt	12
3	83669	Rear Plate	12

Fig. 10 - Camshaft And Sprocket Group

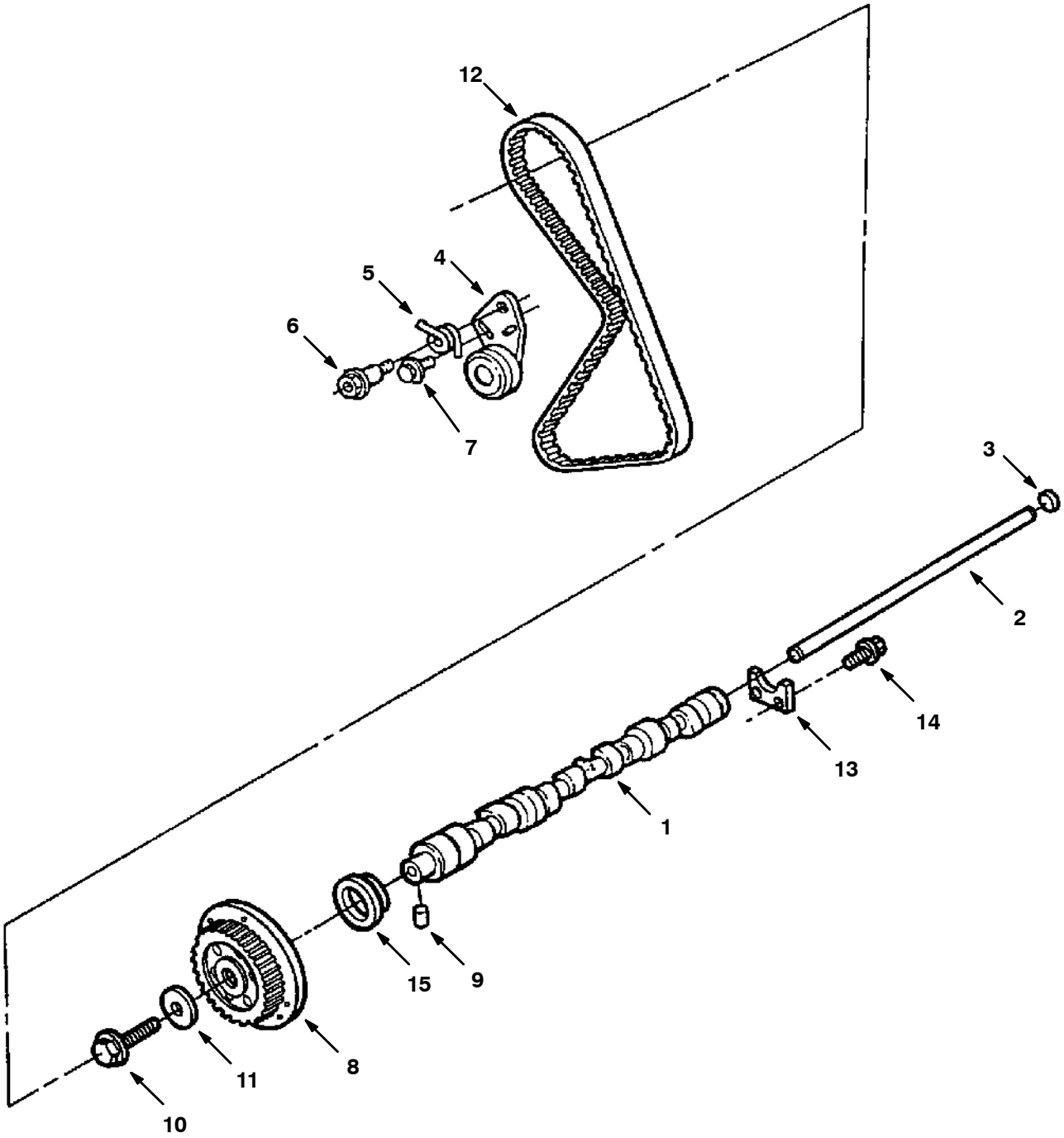

10520 - 800L, 8410, G, LP

Fig. 10 - Camshaft And Sprocket Group

Ref.	Part No.	Description	Qty.
1	84915	Camshaft	1
2	84916	Rod	1
3	84917	Plug	1
4	73967	Tensioner, Arm	1
5	73970	Spring, Tension	1
6	84919	Bolt,Tens.Sprn	1
7	74552	Bolt	1
8	84978	Camshft Sprckt	1
9	84921	Pin, 1/4X.32	1
10	74545	Bolt M12X45	1
11	73937	Washer	1
12	84936	Timing Belt	1
13	73954	Plate	1
14	74548	Scr&Wash M6	2
15	60833	Oil Seal, Front	1

Fig. 11 - Valve And Rocker Arm Cover Group

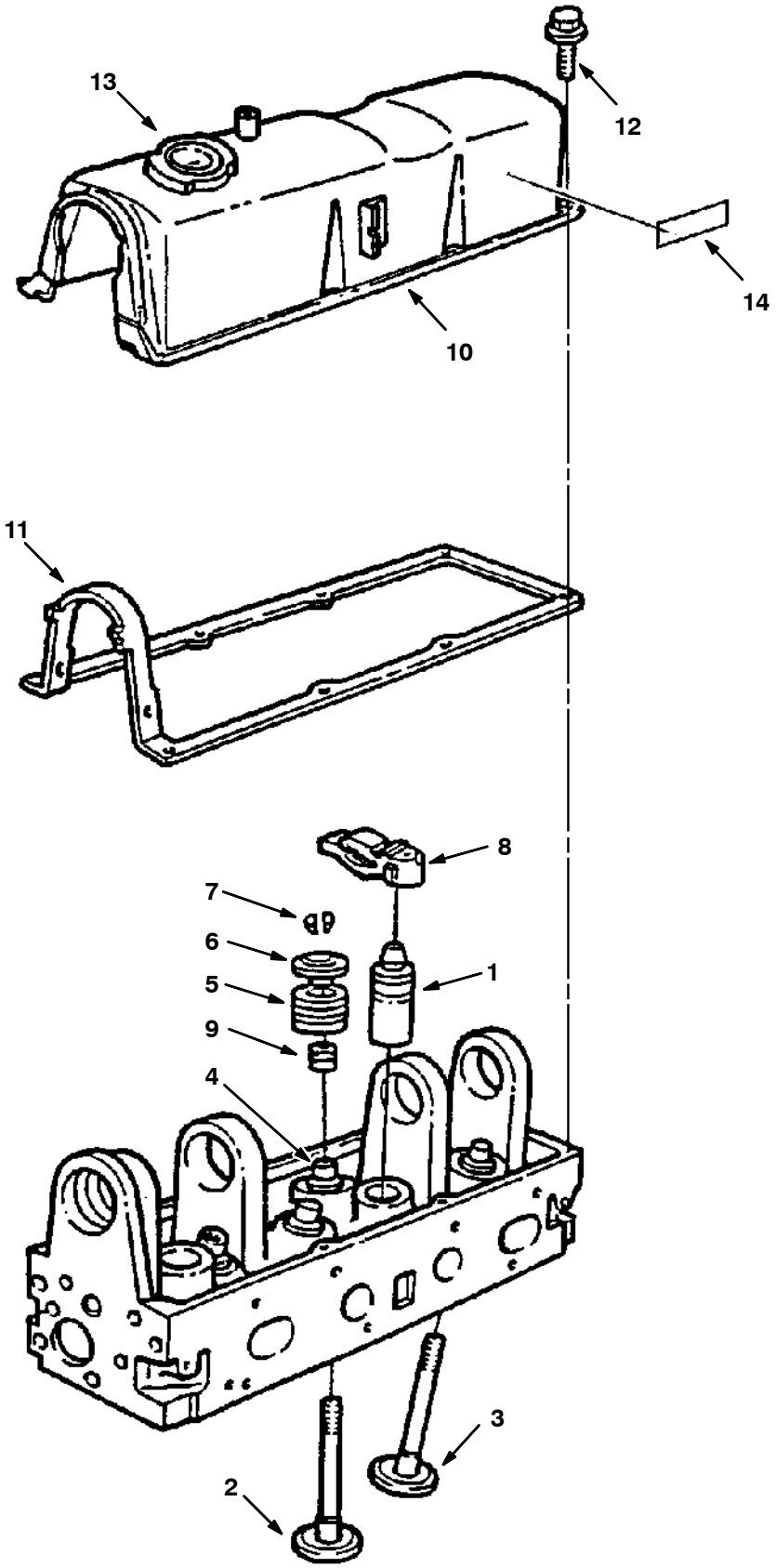

10521 - 800L, 8410, G, LP

Fig. 11 - Valves And Rocker Arm Cover Group

Ref.	Part No.	Description	Qty.
1	84950	Tap.Assy-Valve	8
2	84951	Std.Exh.Valve	4
3	84952	Std.Int.Valve	4
4	84953	Valve Guide Bushing	-
5	84954	Valve Spring	8
6	84955	Valve Spring Retainer	8
7	84956	Valve Spring Key	16
8	84957	Valve Rocker Arm	8
9	84958	Valve Stem Seal	8
10	370876	Valve Rocker Arm Cover	1
11	73995	Gasket,Rocker Cover	1
12	84961	Scr&Wsh,M6X15.0M	8
13	60836	Breather Cap	1
14	36164	Warning Label, Starter	1

Fig. 12 - Piston And Connecting Rod Group

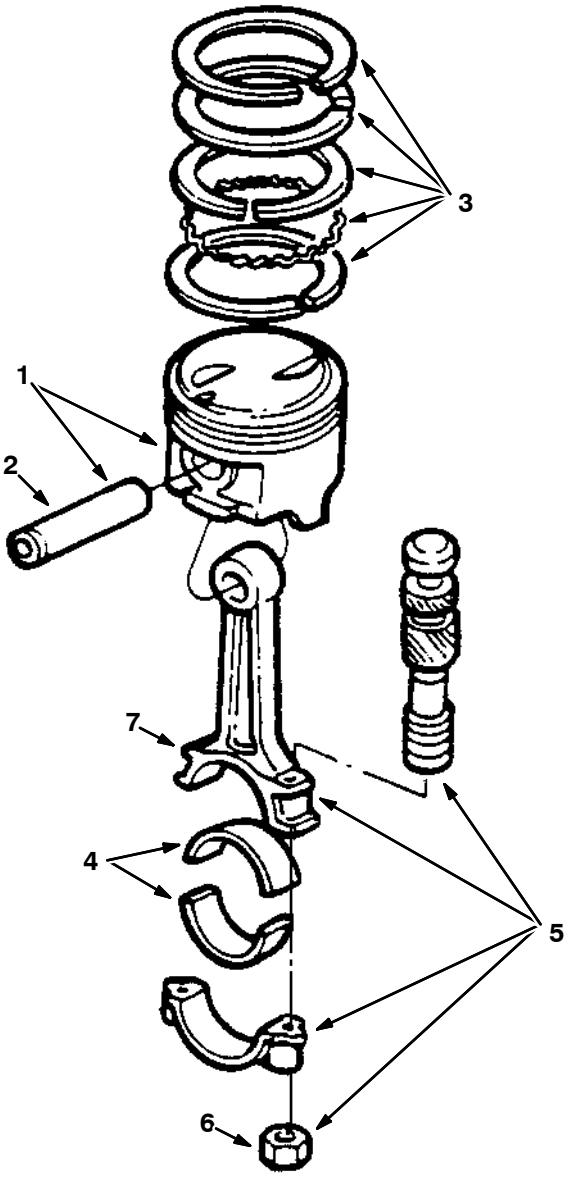

10447 - 800L, 8410, G, LP

	Ref.	Part No.	Description	Qty.
	1	84911	Piston, Std.	4
	2	84912	Piston Pin	4
	3	84913	Ring Set,Std.	2
	4	60812	Bearing	8
	4	73977	Brg-Conn.Rod	-
	4	73978	Brg-Conn.Rod	-
	4	73979	Brg-Conn.Rod	-
	4	73980	Brg-Conn.Rod	-
	4	73981	Brg-Conn.Rod	-
	4	73982	Brg-Conn.Rod	-
▽	5	84914	Connecting Rd	4
▲	6	60813	Nut, Conrod-8	8
▲	7	60814	Bolt-Conrod-4	8

Fig. 13 - Water Pump, Thermostat and Fan Group

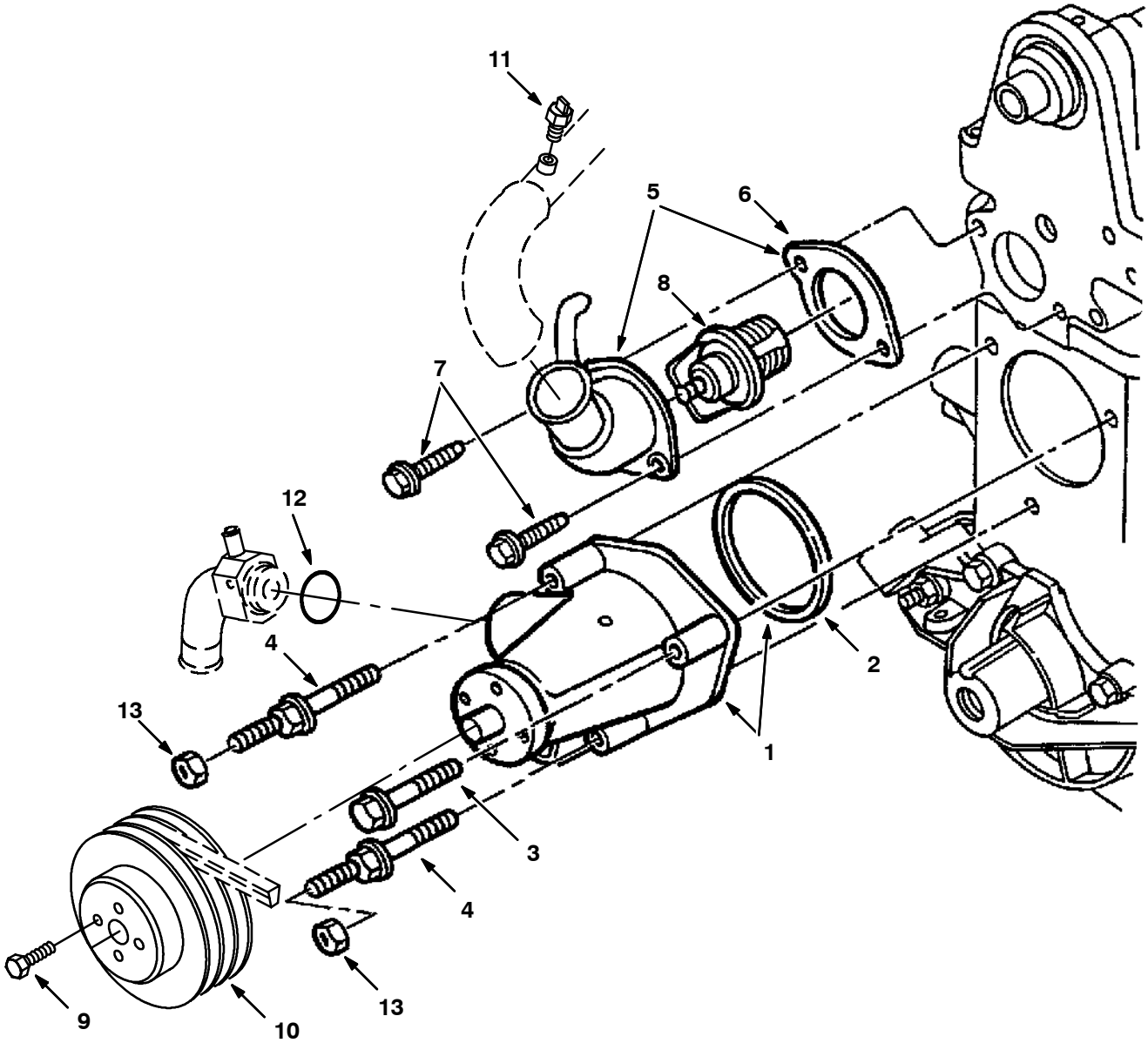

10528 - 800L, 8410, G, LP

	Ref.	Part No.	Description	Qty.
▽	1	84982	Water Pump	1
▲	2	84983	Gskt,Water Pump	1
	3	84984	Bolt,M8X53.0mm	1
	4	84998	Stud	2
▽	5	73996	Water Outlet	1
▲	6	74538	Gasket Water Outlet Connection	1
	7	84988	Bolt,M8X18.0M	2
	8	84987	Therm 190 W/Gsk	1
	9	84994	Bolt, M8X12.0mm	1
	10	36014	Sheave, Water Pump	1
	11	84989	Temperature sensor	1
	12	79975	O-Ring, Water Pump Adaptor	1
	13	84993	Locknut	2

Fig. 14 - Ignition Group

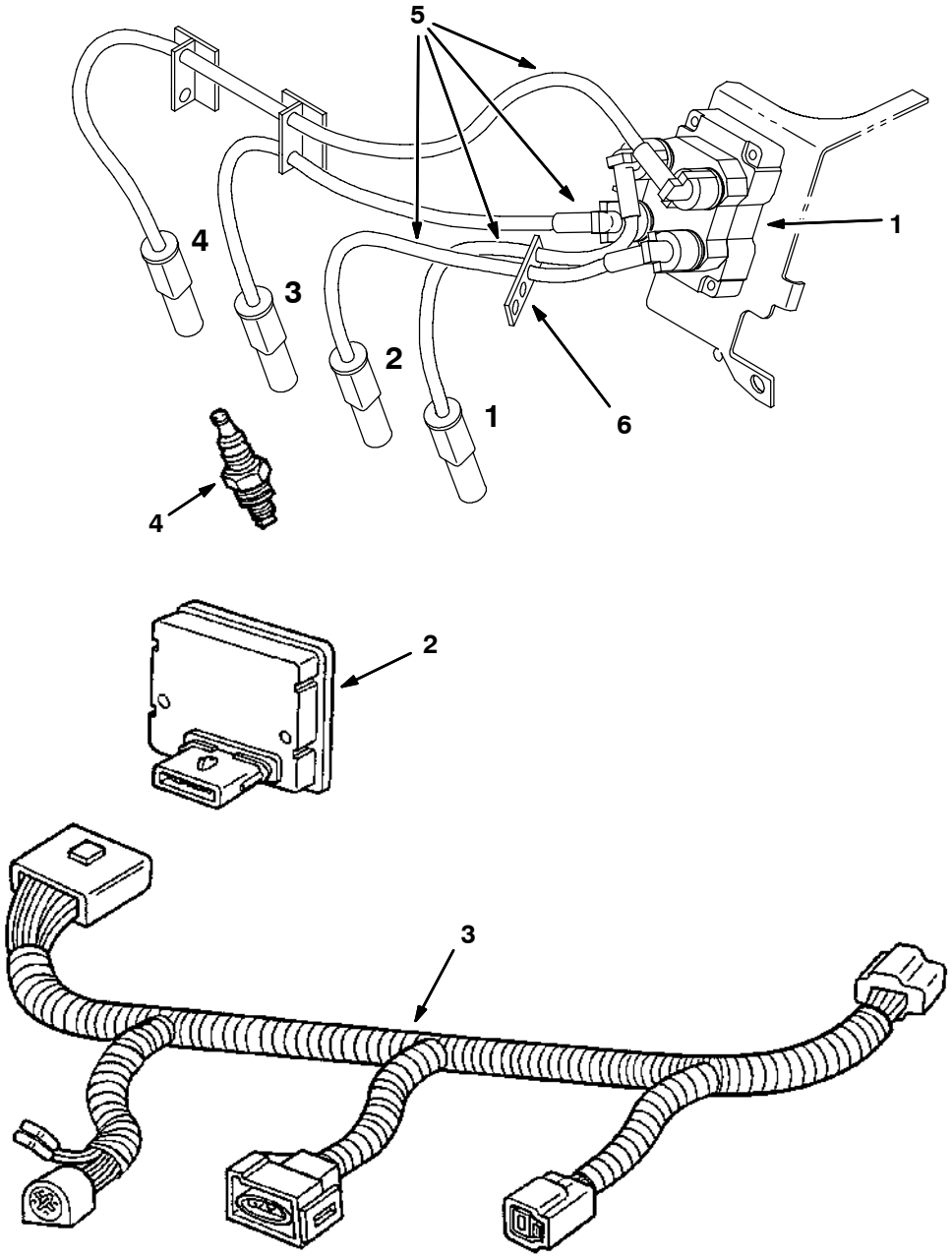

10524-350562 - 800L, 8410, G, LP

Ref.	Part No.	Description	Qty.
1	83732	Ignition Coil	1
2	83676	Ignition Module	1
3	83707	Wire Harness	1
4	60846	Spark Plug	4
5	83677	Wire Asy,Spark Plug	1
6	84882	Separator	1

SECTION 6

Contents **Page**

Fig. 1 – Engine Block Group 6-2
Fig. 2 – Gaskets Group 6-4
Fig. 3 – Cylinder Head Group 6-6
Fig. 4 – Cylinder Front Cover Group 6-7
Fig. 5 – Starter Breakdown 6-8
Fig. 6 – Oil Pan Group 6-10
Fig. 7 – Crankshaft Group 6-12
Fig. 8 – Manifolds Group 6-14
Fig. 9 – Flywheel Group 6-16
Fig. 10 – Camshaft And Sprocket Group 6-18
Fig. 11 – Valve And Rocker Arm Cover Group . . 6-20
Fig. 12 – Piston And Connecting Rod Group . . . 6-22
Fig. 13 – Water Pump, Thermostat and Fan Group 6-23
Fig. 14 – Ignition Group 6-24

Fig. 1 - Engine Block Group

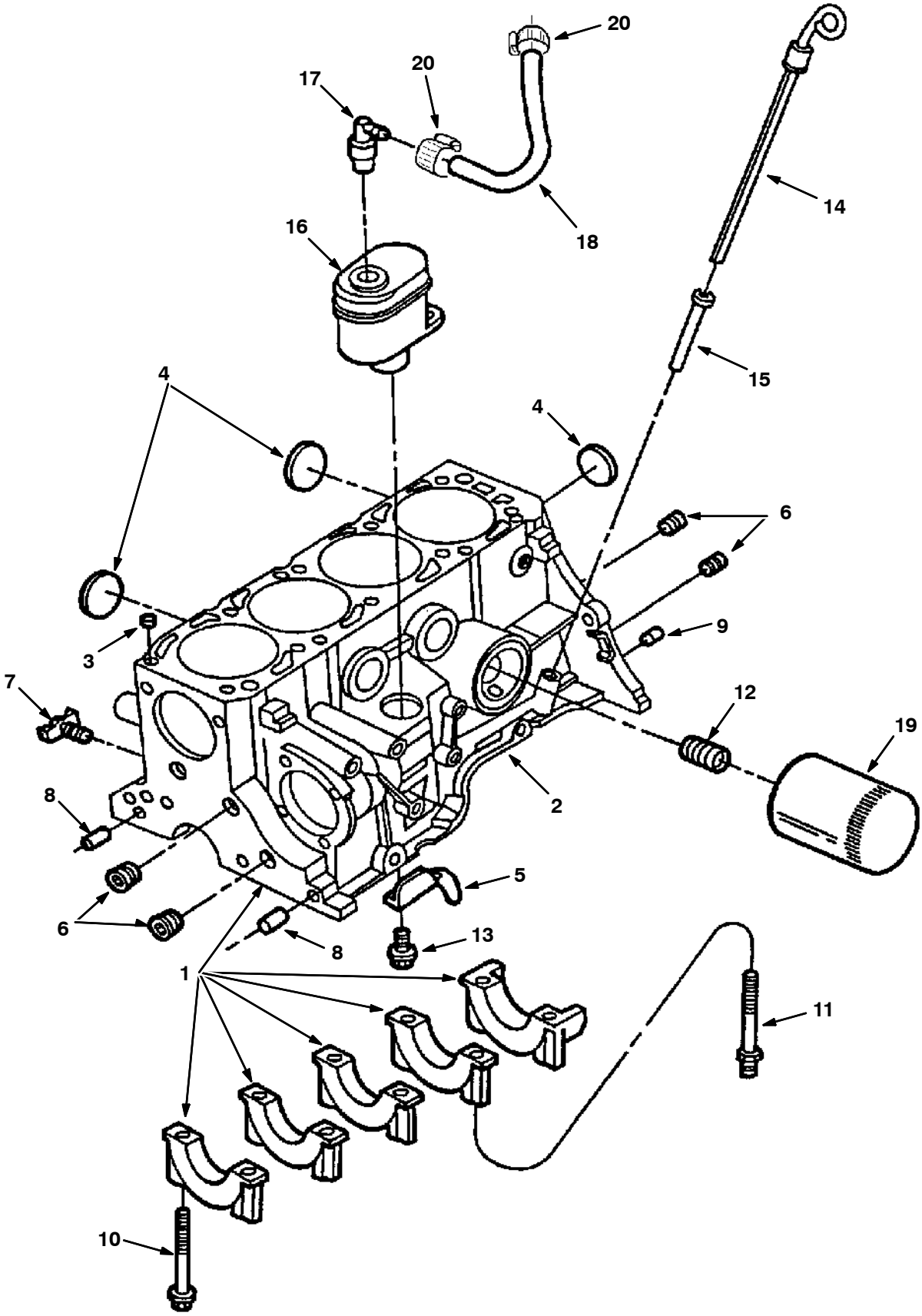

10525 - 800L, 8410, G, LP

Fig. 1 - Engine Block Group

	Ref.	Part No.	Description	Qty.
	1	370847	Cyl Block Assy (Short Block Assy)	1
▽	2	370848	Block Assy	1
▲	3	73958	Dowel	2
▲	4	73921	Plug-Std 2.078	5
▲	4	73920	Plug .06 O/S	-
▲	5	84879	Baffle	1
▲	6	73917	Plug 3/8 Npt	5
▲	6	36268	Plug 1/4 Npt	2
▲	7	54911-32	Draincock,End.Block	1
▲	8	84878	Dowel,Frnt Cover	2
▲	9	370873	Dowel	2
▲	10	73950	Bolt M12	9
▲	11	74516	Stud M12	1
	12	84962	Insert-Oilfilt	1
	13	84880	Bolt, M6X16.5mm	2
	14	370850	Indicator,Oil	1
	15	10724	Short Tube	1
	16	84882	Separator	1
	17	84883	Pcv Vlv Asy	1
	18	84884	Hose	1
	19	39703-2	Filter Element, Oil	1
	20	54333	Clamp, Hose, Wormdrive	2

Fig. 2 - Gaskets Group

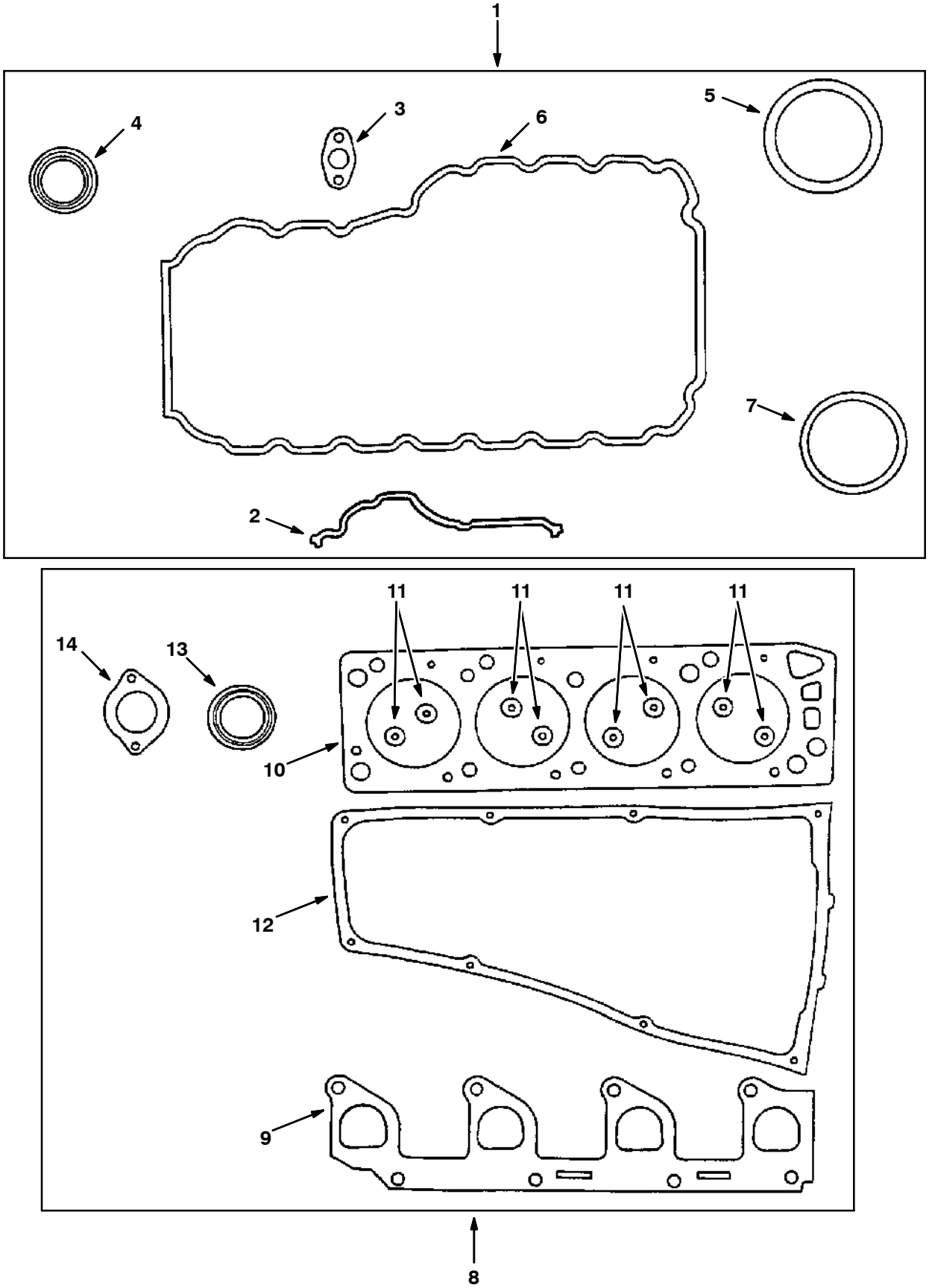

10444 - 800L, 8410, G, LP

Fig. 2 - Gaskets Group

	Ref.	Part No.	Description	Qty.
∇	1	370851	Gskt Kit,Lower	1
▲	2	84896	Gskt,Frnt Cvr	1
▲	3	84887	Gskt,Pmp/Putube	1
▲	4	60833	Oil Seal, Front	1
▲	5	60834	Seal, Rear	1
▲	6	84889	Gasket,Oil Pan	1
▲	7	84983	Gskt,Water Pump	1
∇	8	84891	Gskt Kit,Upper	1
▲	9	84991	Gskt,In.Manfld	1
▲	10	60806	Gasket, Head	1
▲	11	84958	Seal,Valve Stem	8
▲	12	73995	Gskt,Rockr Cvr	1
▲	13	60833	Oil Seal, Front	1
▲	14	74538	Gskt-Waterout	1

Fig. 3 - Cylinder Head Group

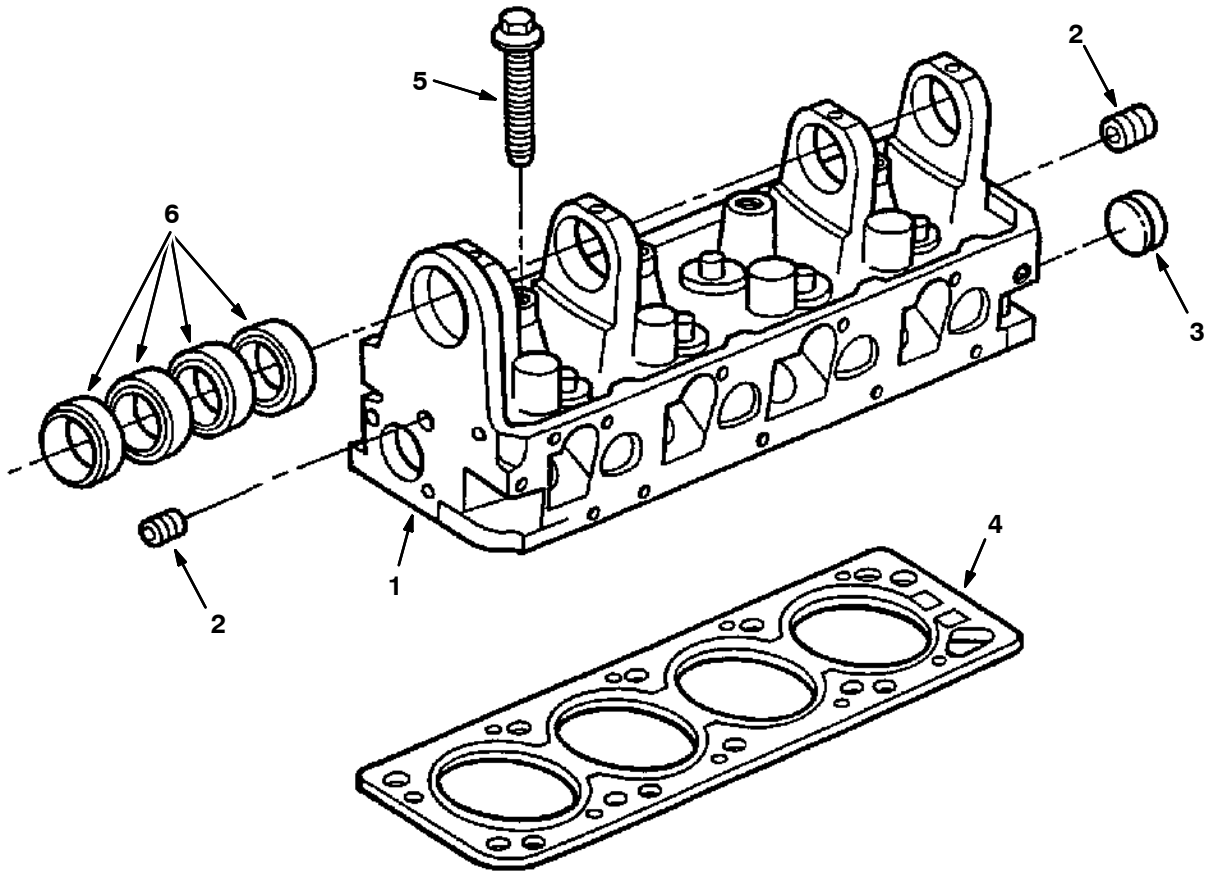

10445 - 800L, 8410, G, LP

Ref.	Part No.	Description	Qty.
1	84907	Head-W/O Valves	1
2	36268	Plug 1/4 Npt	2
3	84910	Plug,1.50 Cup	1
4	60806	Gasket, Head	1
5	73927	Bolt M12	10
6	60817	Bearing Cam,	4
6	73936	Bearing, .016 Camshaft	-

Fig. 4 - Cylinder Front Cover Group

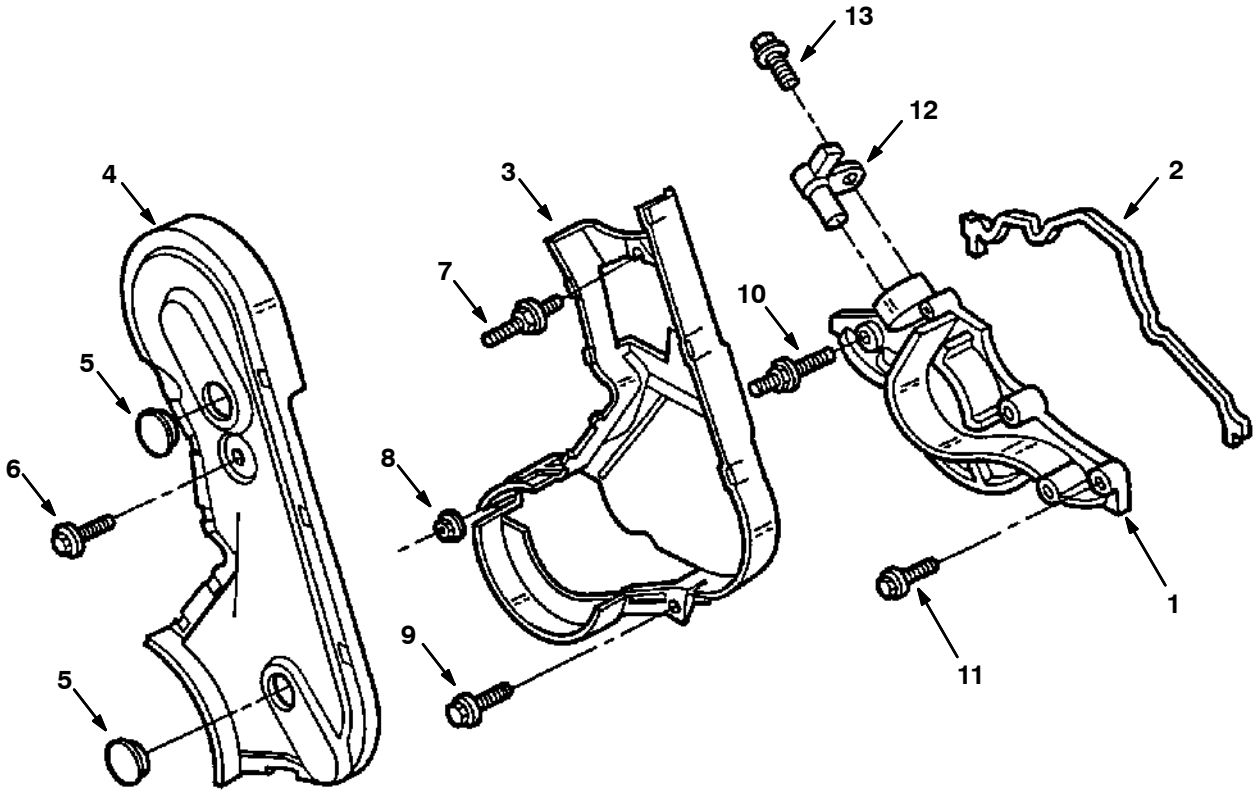

10446 - 800L, 8410, G, LP

Ref.	Part No.	Description	Qty.
1	84895	Lower Cover	1
2	84896	Gskt,Front Cvr	1
3	84897	Inner Cover	1
4	84898	Outer Cover	1
5	74536	Plug	2
6	84899	Bolt, M8 X 17 Schd	1
7	84900	Stud,M8X51.0mm	1
8	84901	Nut, M6	1
9	84902	Scr&Wsh,M6X22.5	1
10	84903	Stud,M6X61.8mm	1
11	84904	Bolt,M6X37.5mm	3
12	84905	Sensor,Crnksft	1
13	84906	Screw,M6X22.5mm	1

Fig. 5 - Starter Breakdown

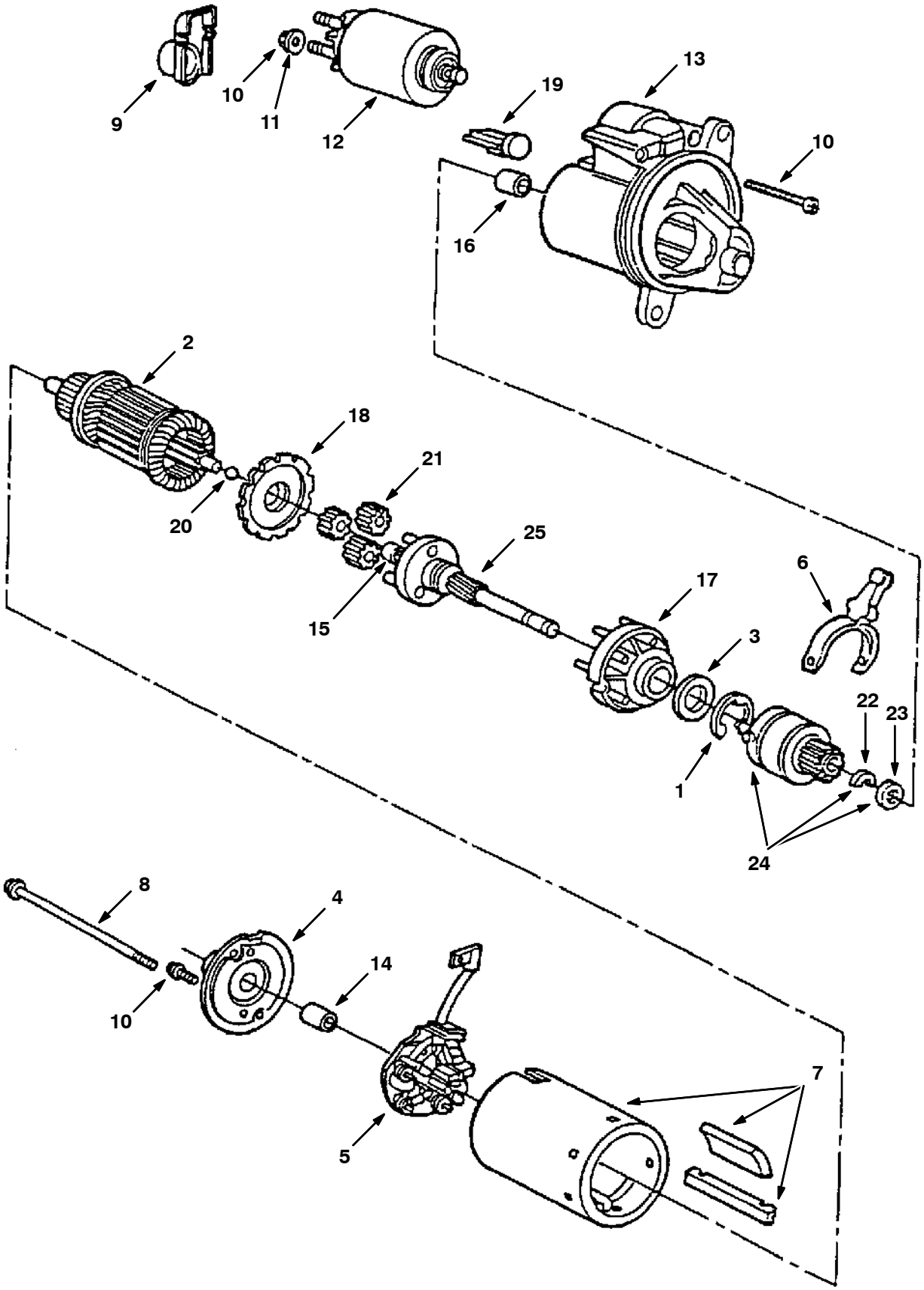

10523 - 800L, 8410, G, LP

Fig. 5 - Starter Breakdown

	Ref.	Part No.	Description	Qty.
∇		60938	Motor, Starting, Perm Mag, 12V	1
▲	1	79640	Retaining Ring	1
▲	2	84999	Armature	1
▲	3	79956	Washer	1
▲	4	79628	Plate & Brg	1
▲	5	79629	Brush Holder	1
▲	6	79630	Lever	1
▲	7	79631	Frame&Mag.As	1
▲	8	79632	Bolt-Thru	2
▲	9	79970	Term.Cover	1
▲∇	10	79633	Kit-Attaching	1
▲▲	11	79957	Nut&Washer,M8	1
▲	12	370829	Solenoid	1
▲	13	79634	Hsg W/Brg	1
▲	14	79635	Bearing	1
▲	15	79960	Planet Bearing	3
▲	16	79961	Bearing	1
▲	17	79962	Statnry Gear	1
▲	18	79963	Retnr.Gear	1
▲	19	79964	Seal	1
▲	20	79965	Arm.Thr.Ball	1
▲	21	79966	Gear Assy	3
▲	22	79636	Ring-Drv.Stop	1
▲	23	79967	Retainer	1
▲	24	79638	Drive Assy	1
▲	25	79969	Shft Asy,Output	1

Fig. 6 - Oil Pan Group

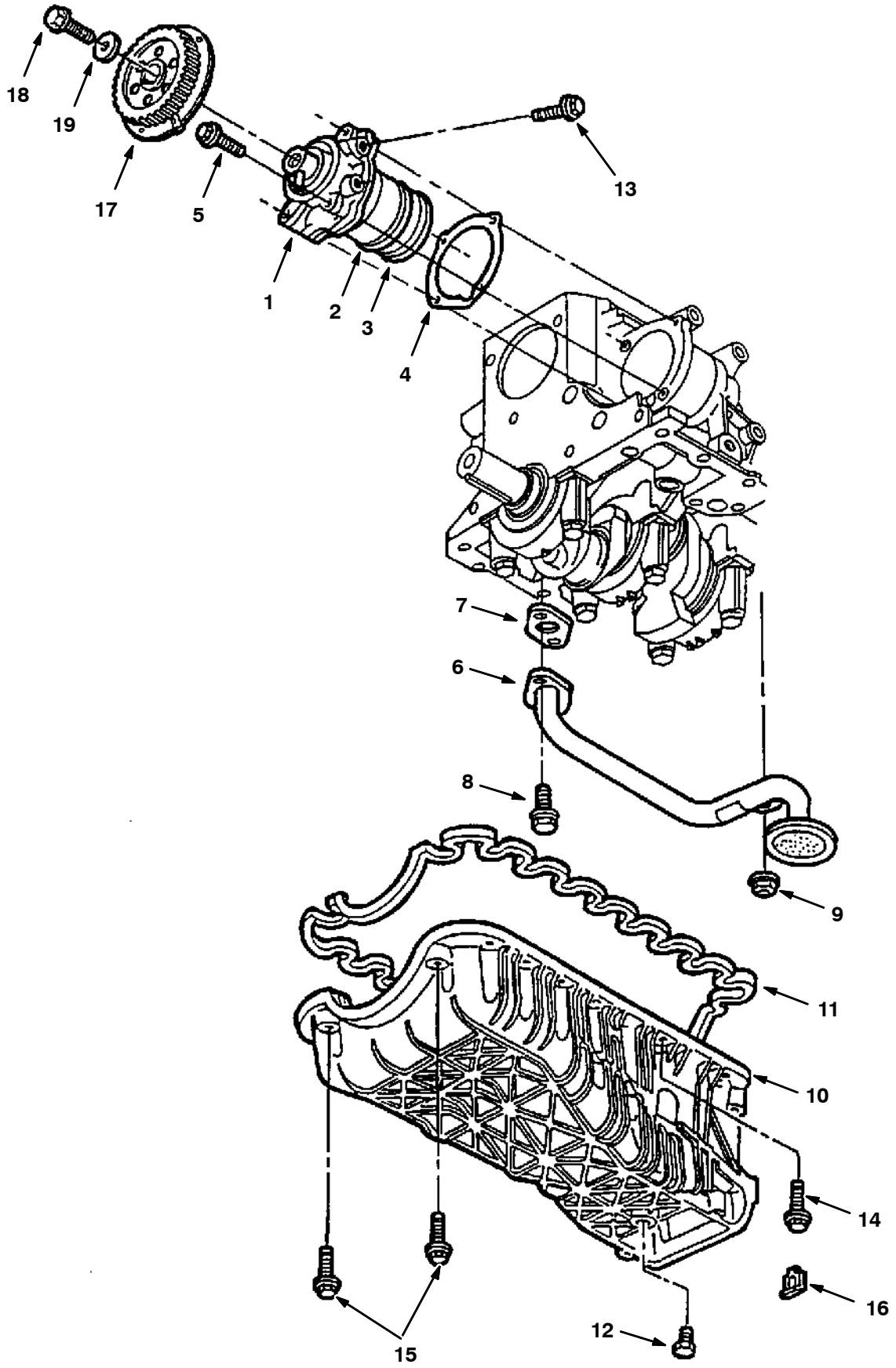

10522 - 800L, 8410, G, LP

Fig. 6 - Oil Pan Group

Ref.	Part No.	Description	Qty.
1	84963	Oil Pump	1
2	84964	O-Ring,2.375	1
3	84965	O-Ring-2.250	1
4	84966	Gskt,Oilpmp/Blk	1
5	84967	Bolt,M6X47.5mm	4
6	370852	Oil Pickup Tube	1
7	84969	Gskt,Pu Tube	1
8	84970	Bolt,M8X20.0mm	2
9	84971	Nut,M10	1
10	370853	Oil Pan Assy	1
11	84889	Gasket,Oil Pan	1
12	370854	Oil Plug	1
13	84981	Bolt,M5X20.0M	2
14	84973	Bolt,M6X27.5mm	16
15	84974	Bolt,M6X52.5mm	2
16	84975	Oil Pan Spacer	-
16	84976	Oil Pan Spacer	-
16	84977	Oil Pan Spacer	-
17	84978	Oil Pmp Sprkt	1
18	84979	Bolt,M10X40.0mm	1
19	74561	Washer	1

Fig. 7 - Crankshaft Group

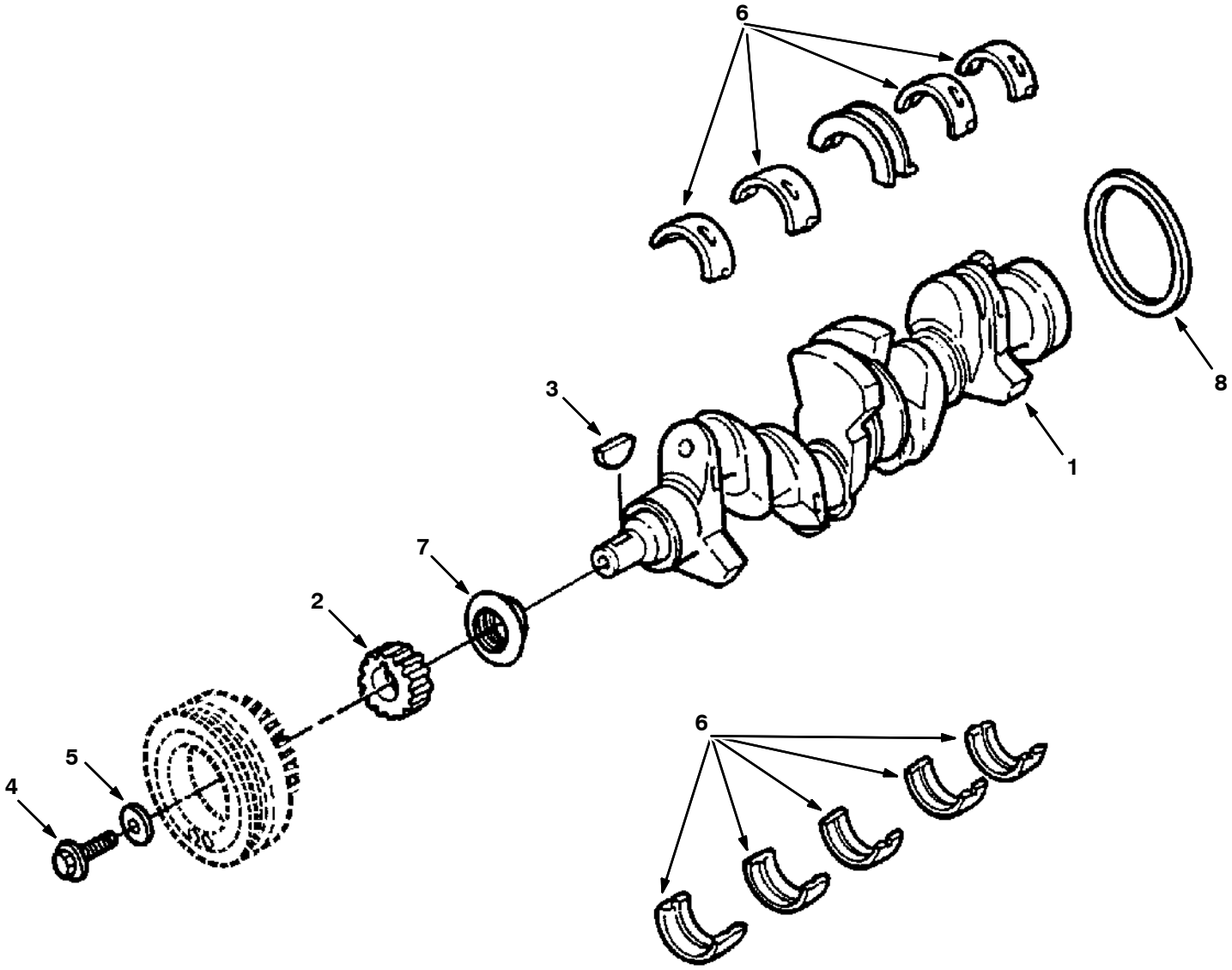

10526 - 800L, 8410, G, LP

Fig. 7 - Crankshaft Group

Ref.	Part No.	Description	Qty.
1	370855	Crankshaft Asy	1
2	84924	Crnksft Sprckt	1
3	84925	Crnkshaft Key	1
4	84926	Bolt,M14X55.0M	1
5	84927	Wash M15 1.53Od	1
6	388555	Bearing Kit, Cshft [Fd]	1
7	60833	Oil Seal, Front	1
8	60834	Crnksft Seal-Rear	1

Fig. 8 - Manifolds Group

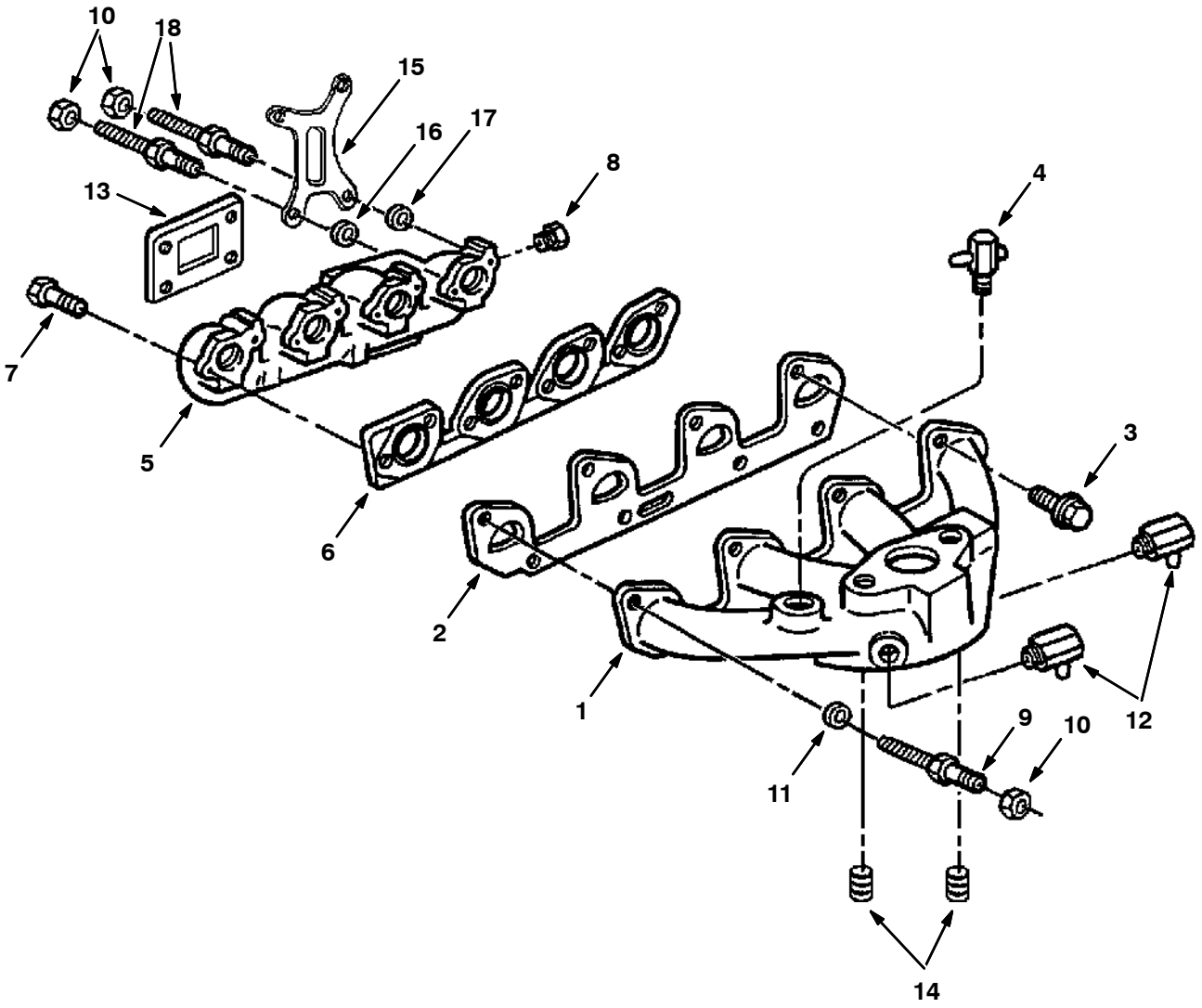

10529 - 800L, 8410, G, LP

Fig. 8 - Manifolds Group

Ref.	Part No.	Description	Qty.
1	84990	Int.Manifold	1
2	84991	Gskt,Int.Mnfld	1
3	84992	Bolt,M8X25.0mm	7
4	74527	Vac.Fitting	1
5	74509	Exh.Manifold	1
6	84995	Gskt,Exh.Mnfld	1
7	84996	Bolt,M10X55.0M	6
8	84997	Plug, 1/2Npt	1
9	79972	Stud	1
10	79973	Nut M8-1.25	3
11	79974	Spacer	1
12	84985	Elbow,90 deg	2
13	36048	Gasket, Exh. Flange	1
14	73917	Plug 3/8 NPT	2
15	79976	Lifting Eye	1
16	21792	Spacer	1
17	21793	Spacer	1
18	21794	Stud	2

Fig. 9 - Flywheel Group

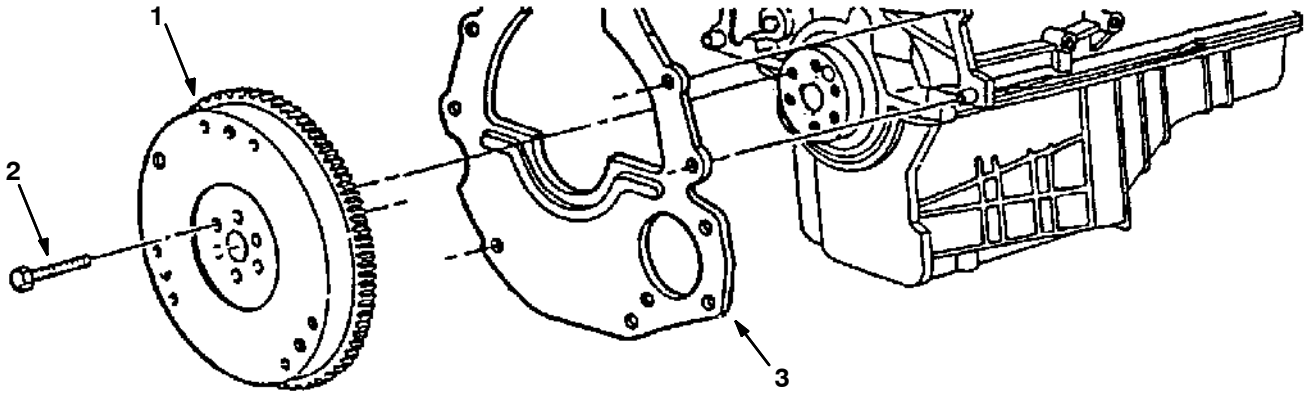

10527 - 800L, 8410, G, LP

Fig. 9 - Flywheel Group

	Ref.	Part No.	Description	Qty.
▽	1	370102	Flywheel	1
▲		84659	Gear, Ring [Fd]	1
	2	64038	Bolt,M10X58.0mm	6
	3	83669	Rear Plate	1

Fig. 10 - Camshaft And Sprocket Group

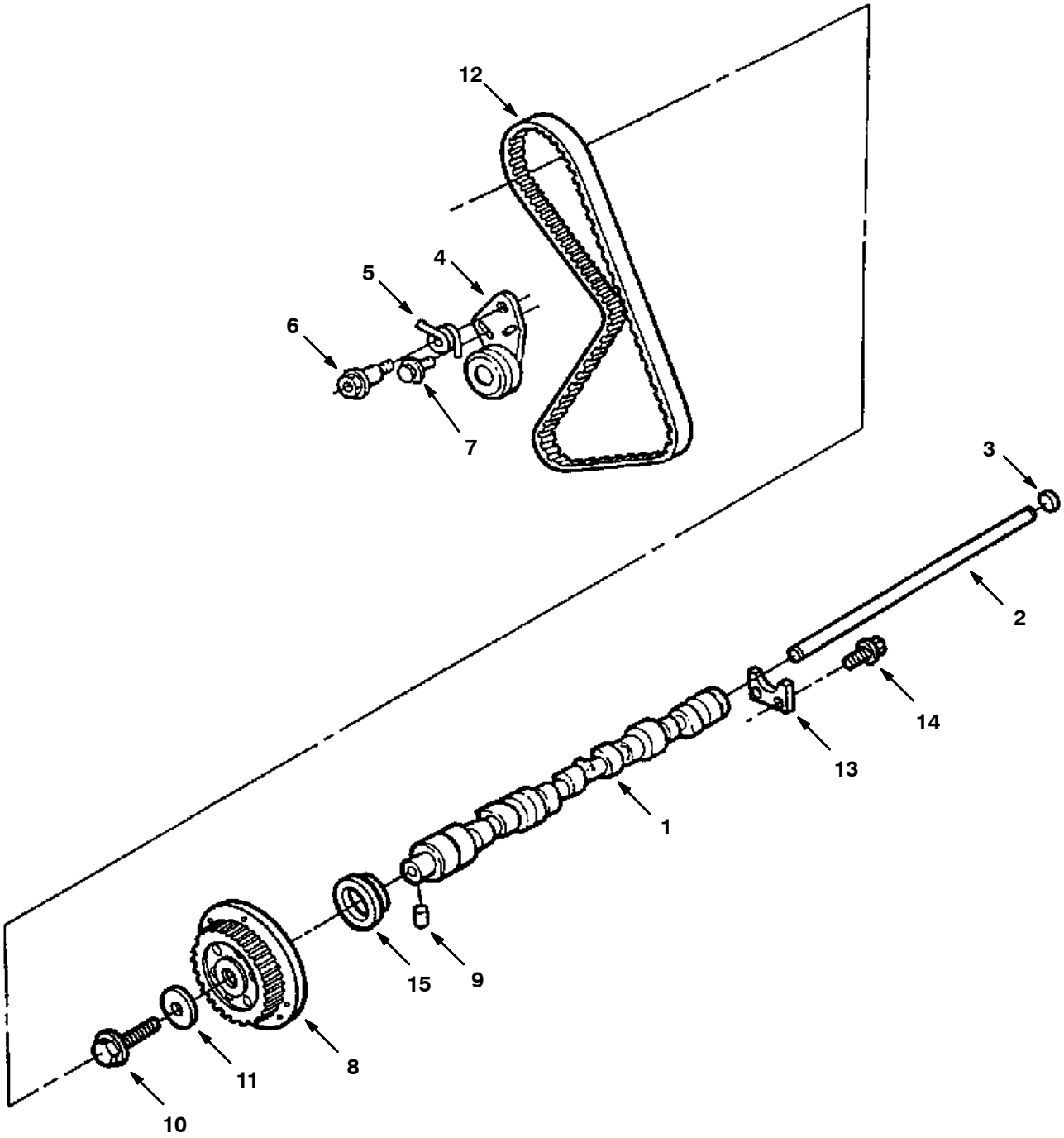

10520 - 800L, 8410, G, LP

Fig. 10 - Camshaft And Sprocket Group

Ref.	Part No.	Description	Qty.
1	84915	Camshaft	1
2	84916	Rod	1
3	84917	Plug	1
4	73967	Tensioner, Arm	1
5	73970	Spring, Tension	1
6	84919	Bolt,Tens.Sprn	1
7	74552	Bolt	1
8	84978	Camshft Sprckt	1
9	84921	Pin, 1/4X.32	1
10	74545	Bolt M12X45	1
11	73937	Washer	1
12	84936	Timing Belt	1
13	73954	Plate	1
14	74548	Scr&Wash M6	2
15	60833	Oil Seal, Front	1

Fig. 11 - Valve And Rocker Arm Cover Group

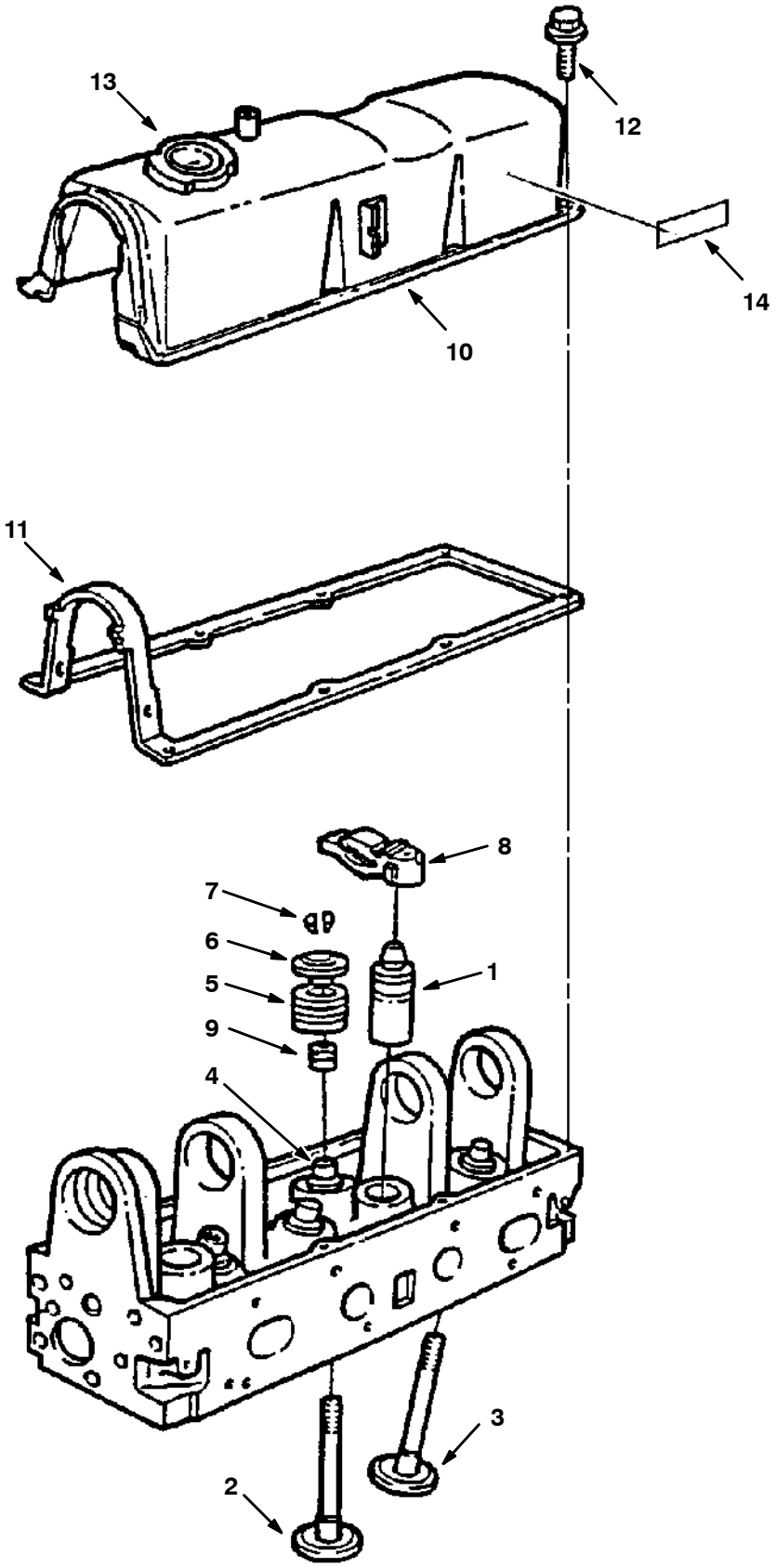

10521 - 800L, 8410, G, LP

Fig. 11 - Valves And Rocker Arm Cover Group

Ref.	Part No.	Description	Qty.
1	84950	Tap.Assy-Valve	8
2	84951	Std.Exh.Valve	4
3	84952	Std.Int.Valve	4
4	84953	Valve Guide Bushing	-
5	84954	Valve Spring	8
6	84955	Valve Spring Retainer	8
7	84956	Valve Spring Key	16
8	84957	Valve Rocker Arm	8
9	84958	Valve Stem Seal	8
10	370876	Valve Rocker Arm Cover	1
11	73995	Gasket,Rocker Cover	1
12	84961	Scr&Wsh,M6X15.0M	8
13	60836	Breather Cap	1
14	36164	Warning Label, Starter	1

Fig. 12 - Piston And Connecting Rod Group

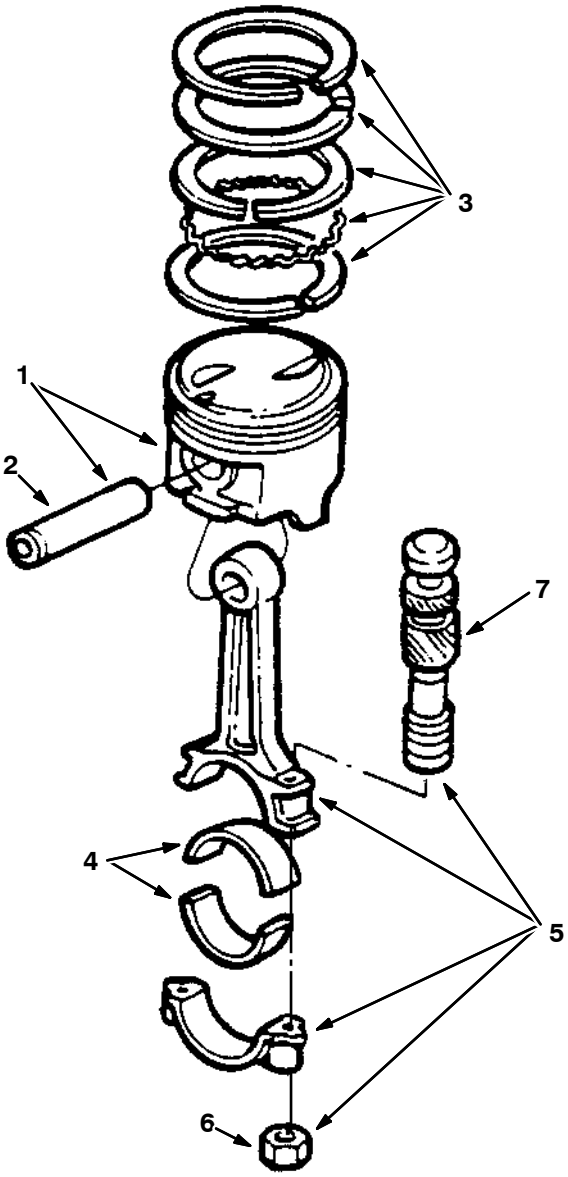

10447 - 800L, 8410, G, LP

	Ref.	Part No.	Description	Qty.
	1	370888	Piston, Std.	4
	2	370889	Piston Pin	4
	3	370890	Ring Set,Std.	2
	4	370891	Bearing	8
∇	5	370892	Connecting Rd	4
▲	6	60813	Nut, Conrod-8	8
▲	7	60814	Bolt-Conrod-4	8

Fig. 13 - Water Pump, Thermostat and Fan Group

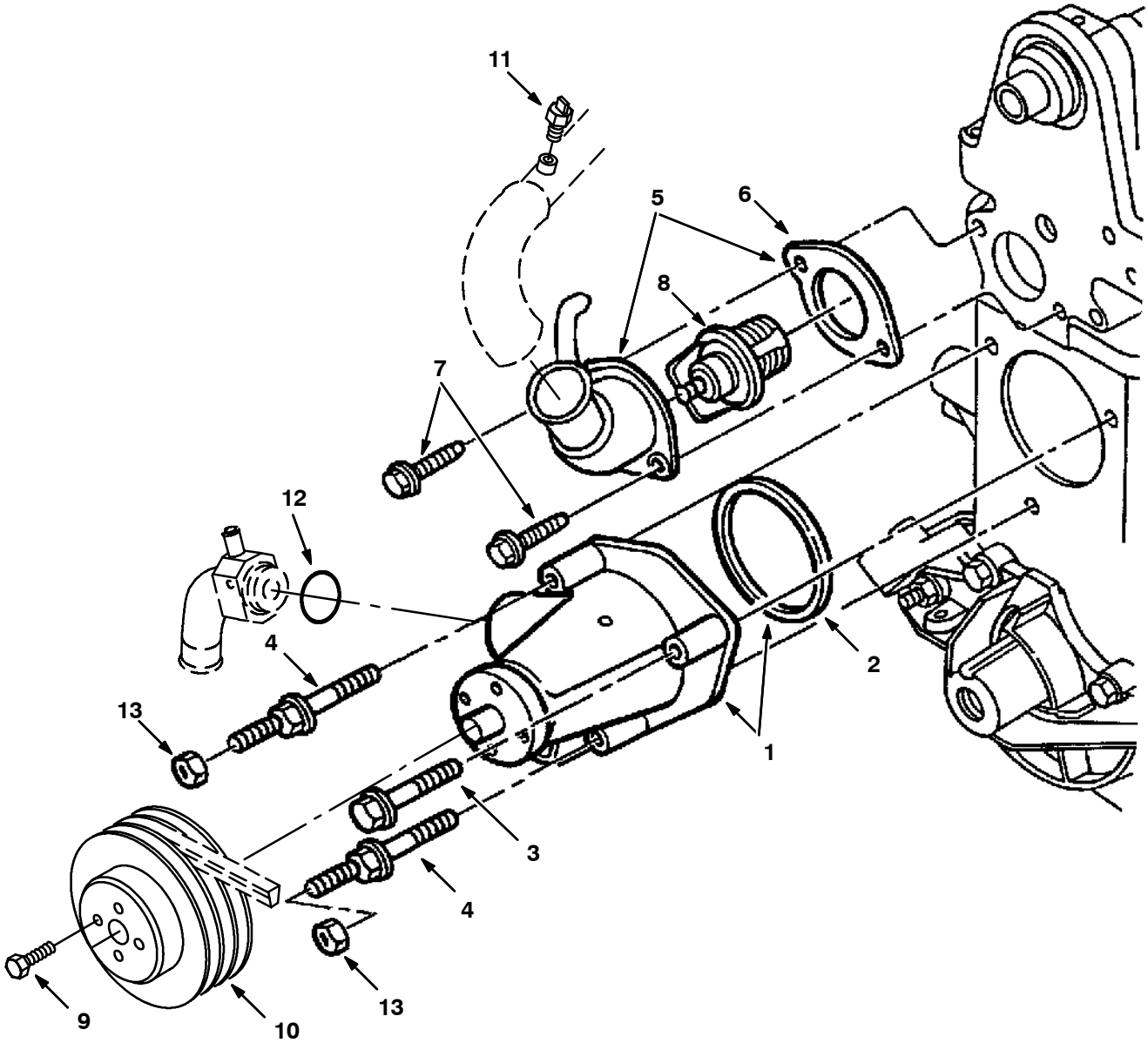

10528 - 800L, 8410, G, LP

	Ref.	Part No.	Description	Qty.
∇	1	84982	Water Pump	1
▲	2	84983	Gskt,Water Pump	1
	3	84984	Bolt,M8X53.0mm	1
	4	84998	Stud	2
∇	5	73996	Water Outlet	1
▲	6	74538	Gasket Water Outlet Connection	1
	7	84988	Bolt,M8X18.0M	2
	8	84987	Therm 190 W/Gsk	1
	9	84994	Bolt, M8X12.0mm	1
	10	36014	Sheave, Water Pump	1
	11	84989	Temperature sensor	1
	12	79975	O-Ring, Water Pump Adaptor	1
	13	84993	Locknut	2

Fig. 14 - Ignition Group

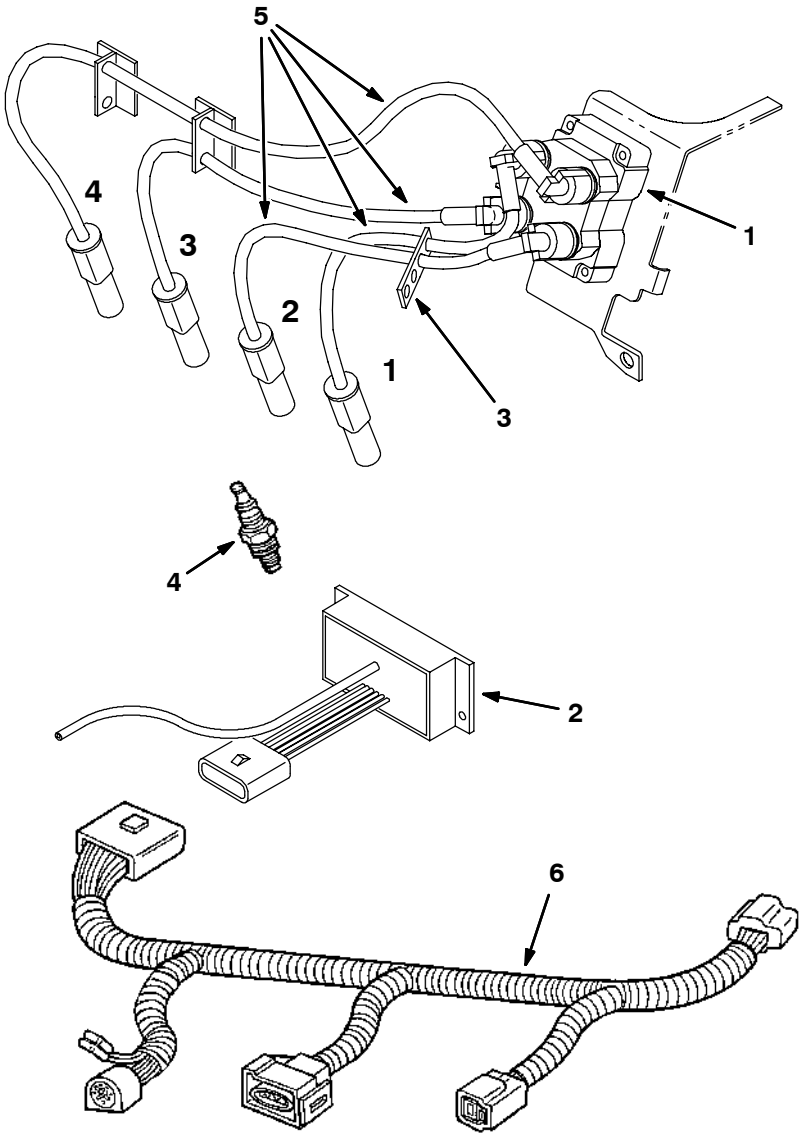

10524-350562 - 800L, 8410, G, LP

Ref.	Part No.	Description	Qty.
1	83732	Ignition Coil	1
2	374274	Ignition Module Kit	1
3	84882	Separator	1
4	60846	Spark Plug	4
5	83677	Wire Asy,Spark Plug	1
6	370875	Harness, Wire, Eng	1

SECTION 7

Contents **Page**

Fig. 1 – Cylinder Head, Valves Group 7-2
Fig. 2 – Distributor and Ignition Group 7-4
Fig. 3 – Engine Block and Piston Group 7-6
Fig. 4 – Oil Pump and Oil Pan Group 7-8
Fig. 5 – Crankshaft Group 7-10
Fig. 6 – Camshaft and Water Pump Group 7-12

Fig. 1 - Cylinder Head, Valves Group

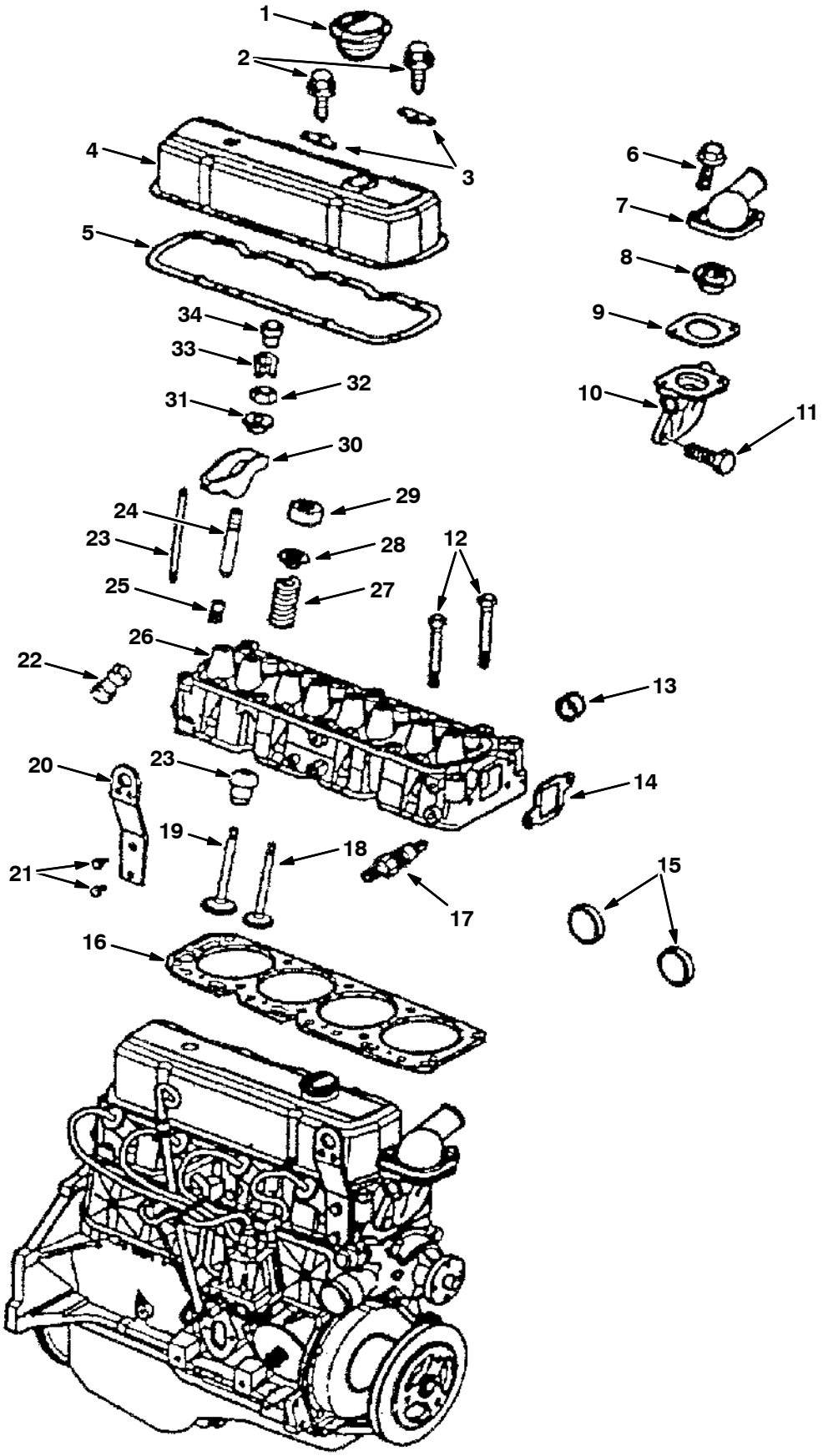

G, LP

Fig. 1 - Cylinder Head, Valves Group

Ref.	Part No.	Description	Qty.
1	371891	Cap, Fill, Oil	1
2	393824	Bolt	–
3	393895	Reinforcement	–
4	393896	Cover	1
5	393897	Gasket	–
6	393898	Bolt	3
7	393899	Outlet For engine serial numbers (013228–014999)	1
8	393900	Thermostat	1
9	393901	Gasket	1
10	393902	Housing	1
11	393898	Bolt	3
12	393903	Bolt	–
13	393904	Plug	2
14	393917	Gasket	1
15	393918	Plug	–
16	393933	Gasket	1
17	393934	Spark Plug	4
18	393935	Valve, Exhaust	4
19	393936	Valve, Intake	4
20	393937	Bracket	1
21	393938	Bolt	8
22	393951	Lifter	8
23	393952	Rod	8
24	393953	Stud, .003” O.S.	8
24	393954	Stud, .013” O.S.	8
25	393955	Sealer	8
26	393956	Head	1
27	393957	Spring	8
28	393958	Cap, Valve Spring	8
29	393959	Shield	12
30	393960	Arm Kit	8
31	393961	Ball	8
32	393962	Nut	8
33	393963	Key	16
34	393964	Rotator	4

Fig. 2 - Distributor and Ignition Group

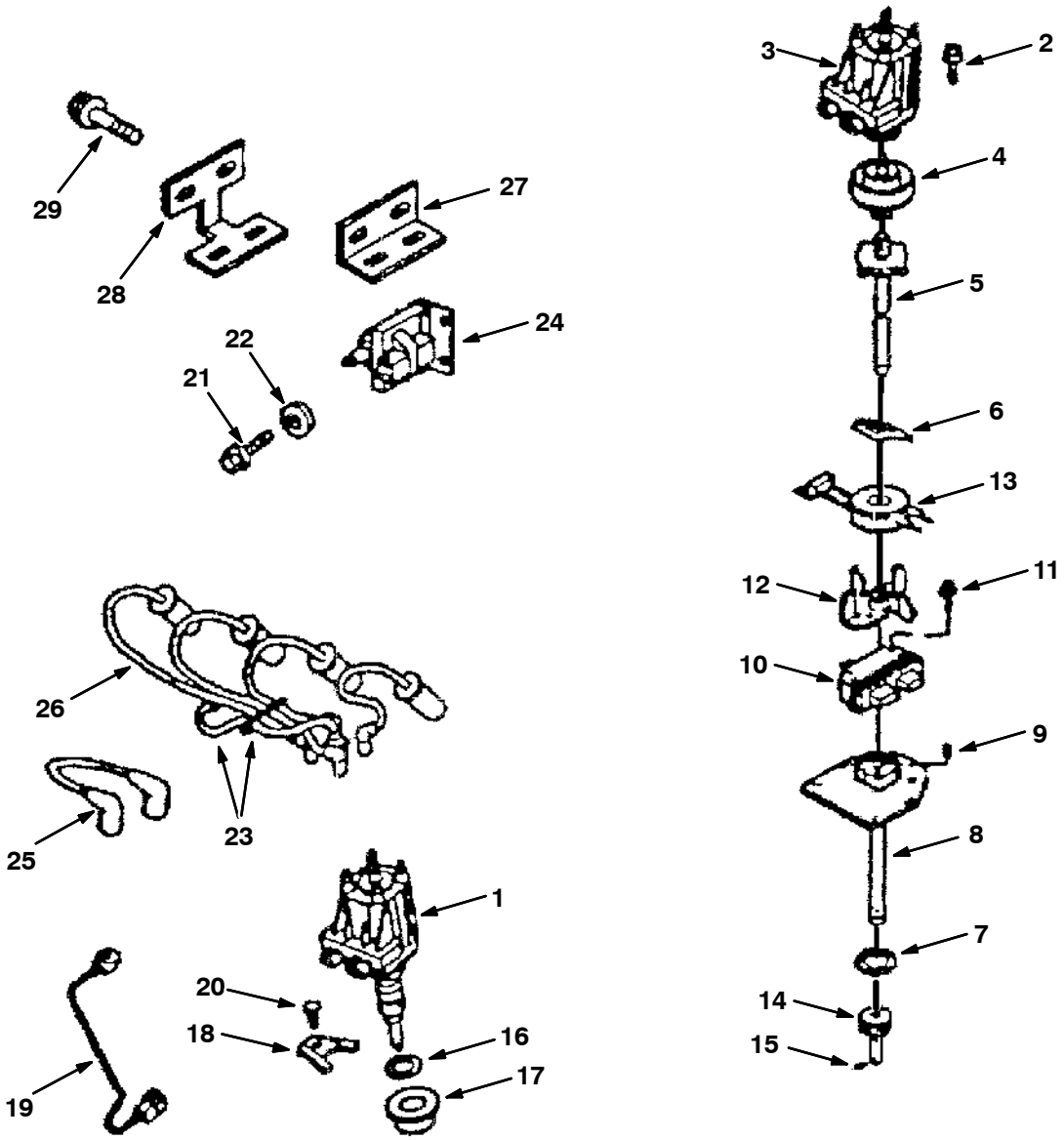

G, LP

Fig. 2 - Distributor and Ignition Group

	Ref.	Part No.	Description	Qty.
▽	1	393939	Distributor	1
▲	2	393919	Bolt	2
▲	3	393920	Cap, Distributor	1
▲	4	393921	Rotor	1
▲	5	393922	Shaft	1
▲	6	393923	Retainer	1
▲	7	393924	Sealer	1
▲	8	393925	Housing	1
▲	9	393926	Pin	1
▲	10	393927	Module	1
▲	11	393928	Bolt	2
▲	12	393929	Pole Piece	1
▲	13	393930	Coil	1
▲	14	393931	Gear	1
▲	15	393932	Pin	1
	16	393940	Gasket	1
	17	393941	Washer	1
	18	393942	Clamp	1
	19	393943	Wire	1
	20	393898	Bolt	3
	21	21194	Screw, Hex, .38-16 X 0.62, 5	1
	22	393946	Washer	2
	23	393947	Retainer	-
	24	393948	Coil	1
	25	393949	Wire	1
	26	393950	Spark Plug Wires	1
	27	393965	Bracket, Top	1
	28	393966	Bracket, Bottom	1
	29	393967	Bolt	-

Fig. 3 - Engine Block and Piston Group

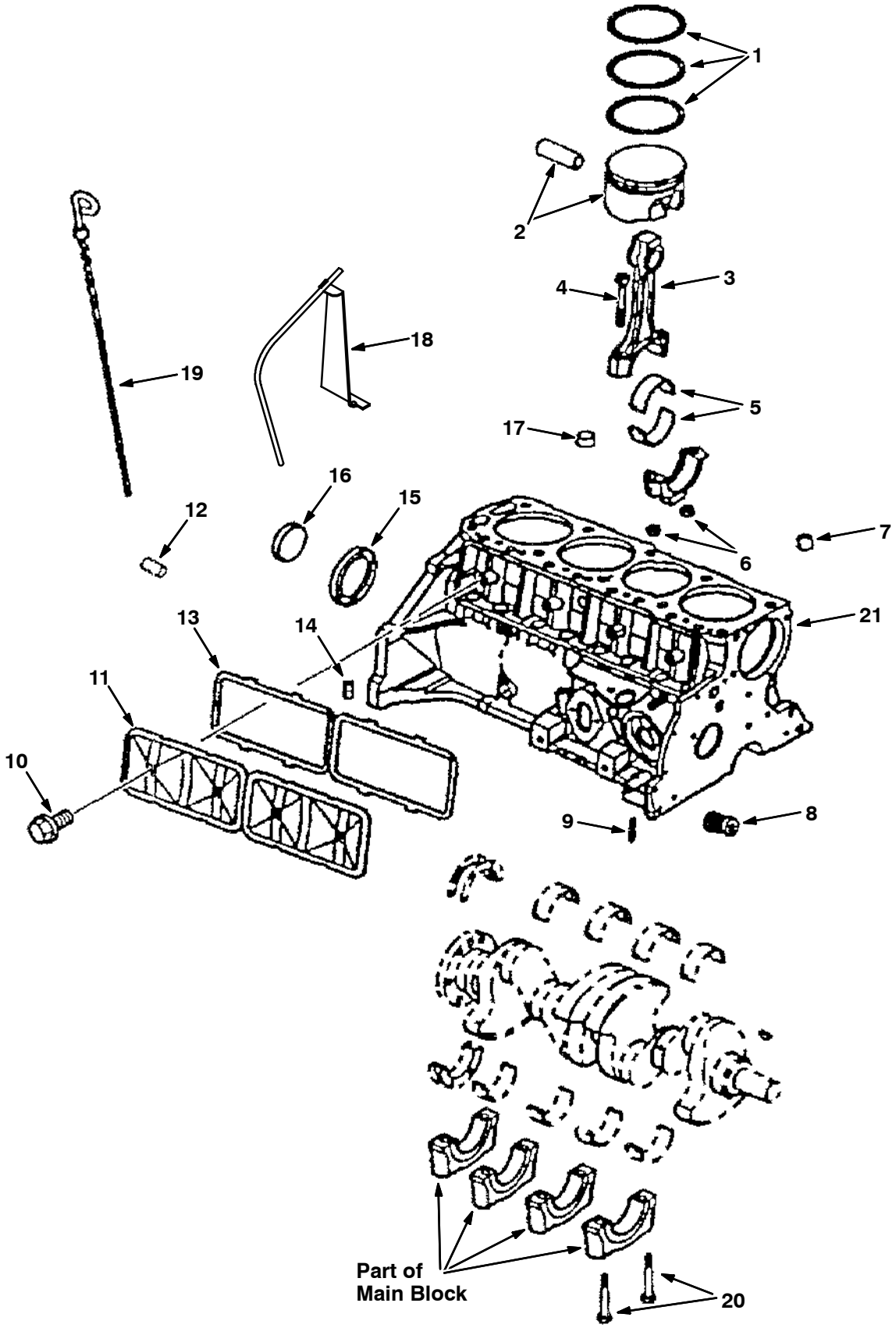

Fig. 3 - Engine Block and Piston Group

Ref.	Part No.	Description	Qty.
1	393806	Ring Kit, Std	4
1	393807	Ring Kit, .030” O.S.	4
2	393808	Piston, STD	4
2	393809	Piston, Hi-limit	4
2	393810	Piston, .020” O.S.	4
3	393811	Conn Rod	4
4	393812	Bolt	8
5	393813	Bearing Kit, Std	4
5	393814	Bearing Kit, .001 U.S.	4
6	393815	Nut, Conn Rod	8
7	393816	Bearing Kit	1
8	393832	Valve	1
9	393833	Pin	8
10	393882	Bolt	4
11	393883	Cover	1
12	393884	Pin	2
13	393662	Sealant, [Rtv], 03.35oz	-
13	393663	Sealant, [Rtv], 05.00oz	-
14	393886	Plug	1
15	393888	Plug	1
16	393889	Plug	-
17	393890	Plug	1
18	372464	Tube, Ds	1
19	372251	Dipstick	1
20	393872	Bolt	10
21	393887	Engine, Partial (Includes block, pistons, rods, crankshaft, bearings, rear seal gasket)	1

Fig. 4 - Oil Pump and Oil Pan Group

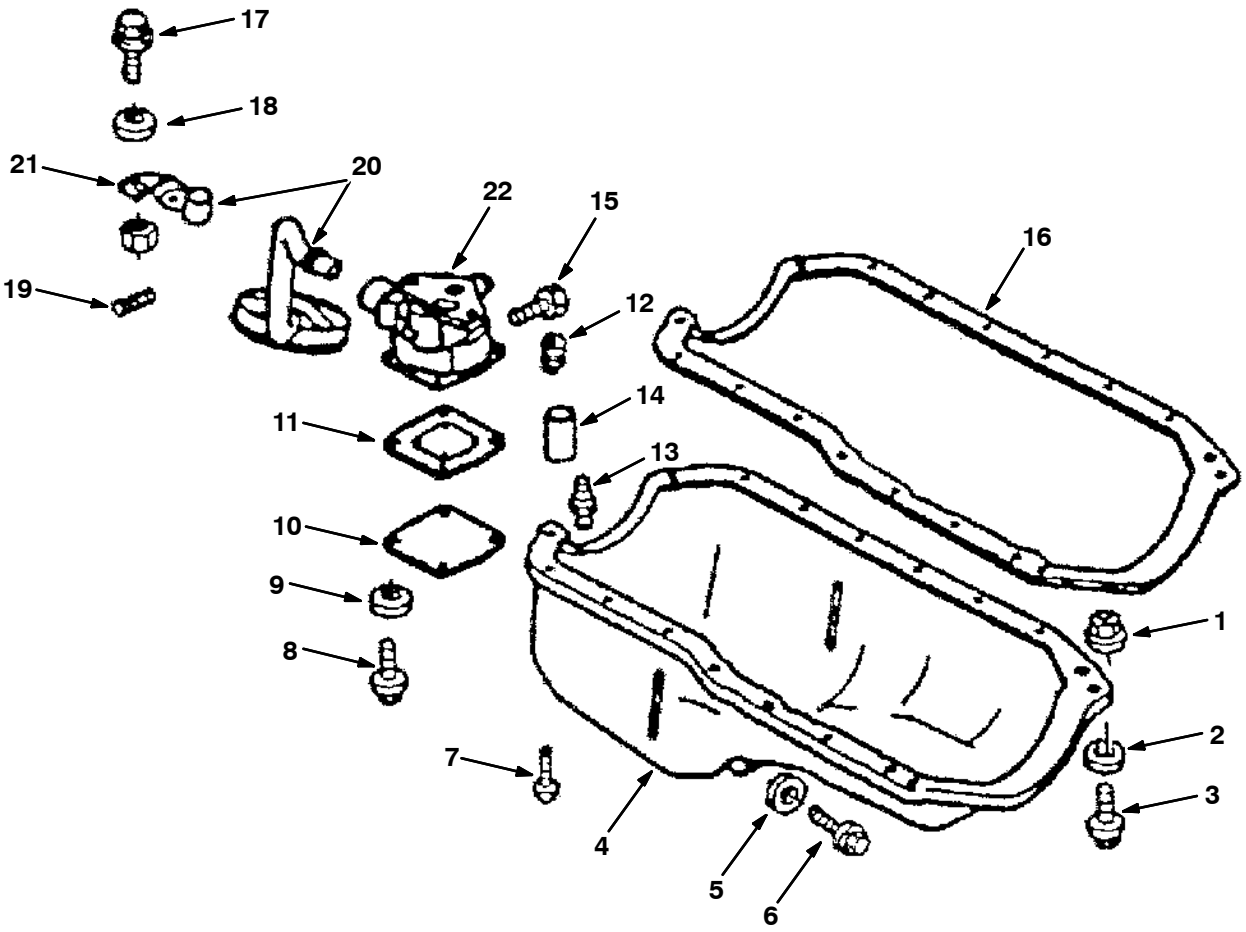

Fig. 4 - Oil Pump and Oil Pan Group

	Ref.	Part No.	Description	Qty.
	1	393848	Nut	-
	2	393849	Washer	-
	3	393850	Bolt	-
▽	4	393853	Oil Pan	1
▲	5	393852	Gasket	1
▲	6	393851	Plug	1
	7	393824	Bolt (1/4-20x1/2)	2
	7	393850	Bolt (1/4-20x.62)	2
	7	393854	Bolt (5/16-18x5/8)	12
	8	393855	Screw	4
	9	393849	Washer	4
	10	393856	Cover	1
	11	393857	Gasket	1
	12	393858	Spring	1
	13	393859	Plug	1
	14	393860	Valve	1
	15	393861	Bolt	3
	16	393862	Gasket	1
	17	393867	Bolt	-
	18	393868	Washer	-
	19	393869	Pin	1
	20	393871	Screen, w/Tube	1
▽	20	393870	Screen, w/Suction Pipe	1
▲	21	393865	Bracket	1
	22	393863	Pump	1

Fig. 5 - Crankshaft Group

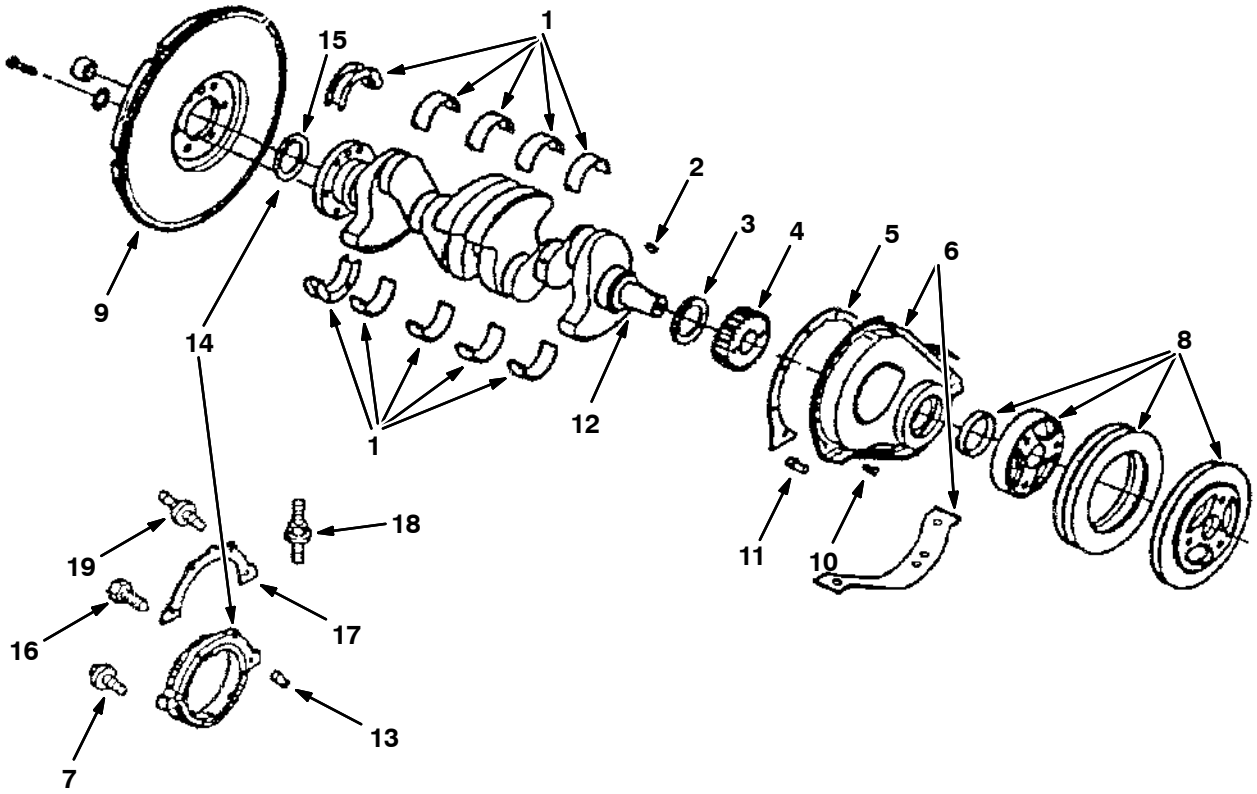

Fig. 5 - Crankshaft Group

	Ref.	Part No.	Description	Qty.
	1	393837	Bearing Kit, Std #1, 2, 3, 4	4
	1	393838	Bearing Kit, .001” #1, 2, 3, 4	4
	1	393839	Bearing Kit, .010” #1, 2, 3, 4	1
	1	393840	Bearing Kit, .020” #1, 2, 3, 4	1
	1	393841	Bearing Kit, .030” #1, 2, 3, 4	1
	1	393836	Bearing Kit, Std #5	4
	1	393834	Bearing Kit, .001” #5	4
	1	393835	Bearing Kit, .025” #5	4
	2	393826	Key	1
	3	393842	Seal	1
	4	393843	Gear	1
	5	393844	Gasket	1
	6	393845	Cover	1
	7	393875	Bolt	–
	8	393846	Balancer	1
	9	393881	Gear	1
	10	393824	Bolt	8
	11	393864	Nozzle	1
	12	393866	Crankshaft	1
	13	393873	Pin	1
▽	14	393874	Housing	1
▲	15	393880	Seal	1
	16	393876	Bolt	–
	17	393877	Gasket	1
	18	393878	Stud	1
	19	393879	Stud	2

Fig. 6 - Camshaft and Water Pump Group

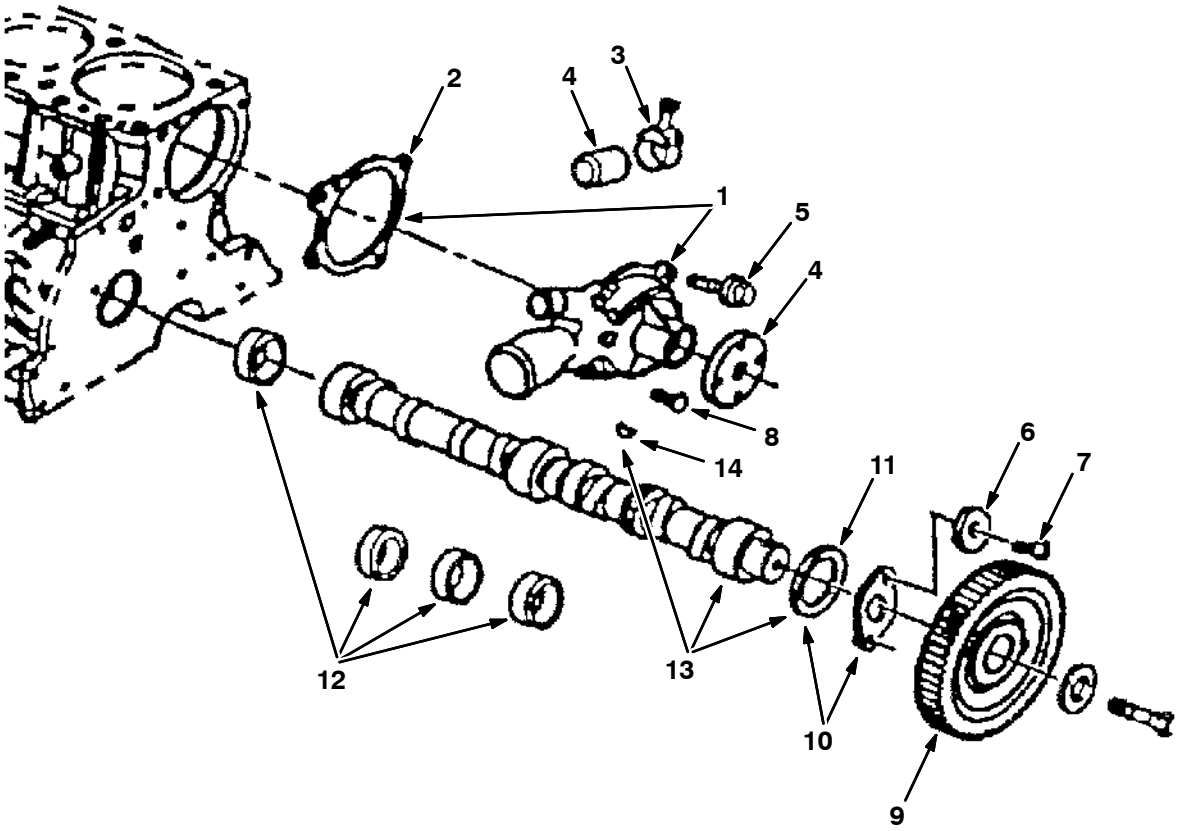

G, LP

	Ref.	Part No.	Description	Qty.
▽	1	393820	Water Pump	1
▲	2	393817	Gasket	1
	4	393818	Cap	1
	3	393819	Clamp	1
	5	393821	Bolt	1
	6	393822	Washer	1
	7	393823	Bolt (1/4-20x1/12 Hex)	1
	7	393824	Bolt (1/4-20x1/12)	3
	8	393825	Bolt (5/16-18x1.5 Hex)	2
	9	393827	Gear	1
▽	10	393828	Plate Kit	1
▲	11	393829	Ring	3
	12	393830	Bearing Kit	1
▽	13	393831	Camshaft	2
▲	14	393826	Key	1

SECTION 8

CONTENTS **PAGE**

PART NUMBER TO PAGE NUMBER CROSS REFERENCE LIST 8-2
PART DESCRIPTION TO PAGE NUMBER CROSS REFERENCE LIST 8-17

PART NUMBER TO PAGE NUMBER CROSS REFERENCE LIST

Part Number	Page Number
IB3614	4-12, 4-13, 4-14
MM390	3-44
MM390ES	3-44
MM390FR	3-44
MM392	3-44
00500-15	4-11, 4-15
00954	4-13
00960	4-12
00966	4-14
01314	2-13
01316	3-3
01493	2-13
01516	2-189
01683	2-135, 2-201
01684	2-4, 2-5, 2-9, 2-11, 2-169, 2-171, 2-193, 2-195, 2-201, 2-203, 2-211
01685	2-9, 2-11, 2-137, 2-139, 2-171, 2-173, 2-175, 2-177, 2-181, 2-183, 2-187, 2-191, 2-193, 2-195, 2-197, 2-203, 2-205
01686	2-9, 2-11, 2-173, 2-177, 2-181, 2-183, 2-185, 2-187
01714	2-137, 2-139
01760	2-171
01988	2-149, 2-153
02129	2-113, 2-115
02205	2-155
02247	2-69, 2-113, 2-115
02361	2-149, 2-153
02430	4-43
02506-6	3-27
02676	2-149, 2-153
02705	4-23, 4-25
02706	4-23, 4-25, 4-27
02709	4-23, 4-25
02712	2-25
02731	2-13
02740	2-79, 2-81
02741	2-79, 2-81
02850	2-33
02931	2-189
03026	2-79, 2-81, 2-83, 2-85
03192	2-127, 2-157, 2-159
03495	2-189
03922	2-213, 2-215, 2-217
04414	2-39, 2-41, 2-43
04706	2-219
04846	2-185
05036	2-5
05494	2-63
05624	2-171
05686	2-173, 2-177
05724	2-5
05725	2-4
05726	2-5
06279	2-177
06549	3-11, 3-13, 3-15, 3-17
06933	2-197, 2-199
06942	2-65, 2-93, 2-127, 3-11, 3-13
06943	2-65, 2-91, 2-93, 2-117, 2-119, 3-15, 3-17
06945	2-211
06948	2-59
06949	2-101
06958	2-119, 2-135
06959	2-187
06968	2-39, 2-41, 2-43
06972	2-39, 2-41, 2-43
06974	2-169
07259	2-19
07450	2-189
07471	2-203
07562	2-79, 2-81, 3-39
07565	3-39
07592	2-45, 2-47, 2-49
07597	2-67
07786	2-181, 2-183
07788	2-9, 2-11
07790	2-65, 3-11, 3-13
07791	2-39, 2-41, 2-43, 2-47, 2-49, 2-99, 2-101, 2-217, 3-19
07792	2-127
07805	2-169, 2-203
07819	2-187
08013N	2-5
08085	2-181
08143	2-31
08164	2-91, 2-93
08166	2-93
08175	2-167, 2-177
08228	2-111, 2-113, 2-115
08361	2-173, 2-177
08708	2-21, 2-99, 2-101, 2-119, 2-135, 2-193, 2-195, 3-11, 3-13, 3-15, 3-17
08709	2-85, 2-119, 2-125, 2-127, 2-135, 2-143, 2-157, 2-159
08711	2-21, 2-39, 2-41, 2-43, 2-137, 2-139, 2-169, 2-187
08712	2-9, 2-11
08713	2-31, 2-133, 2-137, 2-139, 2-171, 2-173, 2-175, 2-177, 2-183, 2-185, 2-187, 2-191, 2-193, 2-195
08714	2-173, 2-177, 2-181, 2-183, 2-185
08716	2-193, 2-195
08793	3-15, 3-17
09007	2-9, 2-11, 2-21, 2-171
09010	2-9, 2-11, 2-183, 2-187, 2-205
09011	2-171, 2-173, 2-175, 2-177, 2-181, 2-183
09023	2-133, 2-137, 2-139
09028	2-9, 2-11, 2-185
09088	2-133
09120	2-169
09198	2-5
09228	2-33
09244	3-11, 3-13, 3-15, 3-17
09252	2-203
09291	2-9, 2-11
09342	2-7
09570	2-193
09718	2-19
09738	2-135
09739	2-201
09740	2-171, 2-191, 2-193, 2-195
09806	2-13
09832	2-137, 2-139
09900-1	2-169
1001303	2-193, 2-195
1002789	2-207
1002898	2-205
1002899	2-205
1005086	2-207
1005255	2-205
1005302	2-207
1005304	2-207
1005416	2-17, 2-205
1005435	2-205
1005506	2-203
1005507	2-203
1005508	2-203
1005552	2-207
1006410	2-195
1006416	2-127
1006447	2-203
1007162	2-45
1008094	2-45, 2-47, 2-49
1008142	2-199
1008147	3-3
1008377	2-215
1008511	2-47
1008513	2-47
1008519	2-47
1008538	2-49
1010668	2-203
1010684	2-205
1010713	2-203
1010775	2-203

Part Number	Page Number
1010836	2-203, 2-205
1011011	2-278
1011015	2-278
1011017	2-278
1011107	2-99, 2-101
1011216	2-91, 2-93
1011400	2-91
1011780	2-83, 2-85
1011895	2-99, 2-101
1011899	2-83, 2-85
1011939	2-91
1012033	2-278
1012102	2-99
1012128	2-99
1012185	2-221
1012199	2-115
1012204	2-83, 2-85
1012206	2-83
1012248	2-99, 2-101
1012314	2-99
1012317	2-83, 2-85
1012468	2-99
1012677	2-99
1012719	2-41
1012720	2-41
1013030	2-99
1013086	2-99, 2-101
1013350	2-57
1013399	2-91, 2-93
1013438	2-125, 2-127
1013465	2-91
1013509	2-101
1013590	2-91, 2-93
1013677	2-83, 2-85
1013699	2-143
10137	2-129
1013846	2-217
1013851	2-217
1013902	2-205
1013941	2-115
1013944	2-15
1014082	2-205
1014136	2-15
1014143	2-91, 2-93
1014206	2-83
1014365	2-187
1014446	2-153
1014473	2-203
1014506	2-99, 2-101
1014532	2-203
1014575	2-205
1014595	2-99
1014659	2-99, 2-101
1014689	2-115
1014986	2-205
1014987	2-205
1015012	2-17, 2-205
1015032	2-195
1015036	2-143
1015048	2-195
1015096	2-211
1015136	2-199
1015486	2-207
1016322	2-51
10165	2-189
1017072	2-69
1017239	2-69
1017250	3-11, 3-13, 3-15, 3-17
1017270	4-45, 4-47
1017272	2-69
1017471	2-69
1017475	2-69
1017500	2-69
1017598	2-69
1017662	2-69
1017847	2-91, 2-93
1018063AM	2-111, 2-113, 2-115
1018097	2-205
1018098	2-203
1018467	2-203
1018495	2-203
1018499	2-207
1018533	2-203
1018644	2-125
1018780	2-205
1018883	2-203
1018884	2-203
1018919	2-117
1019351	2-117
1019481	2-11
1019886	2-205
1019939	2-101
1020195	2-211
1020250	2-205
1020530	2-9
1021095	2-197
1021210	3-5, 4-41
1021231	2-203
1021878	2-3, 2-205, 2-3
1022148	2-195
1022388	2-13
1022636	2-211
1022662	2-211
1023491	2-195
1024020	2-195, 2-203, 2-205, 2-207
1024237	2-195
1028419	2-93
1028455	2-93
1028492	2-131
1028558	2-93
1028559	2-93
1028580	2-211
1028582	2-203
1028924	2-101
1028925	2-93
1029257	2-85
1029293	2-101
1029295	2-101
1029334	2-43
1029477	2-159
1029649	2-49
1029737	2-127
1030143	2-127
1030220	2-43
1030224	2-127
1030256	2-101
1030272	2-43
1030485	2-101
1030635	2-49
1030863	2-203
1030864	2-203
1030878	2-203
1031405	2-211
1031699	2-199, 2-201, 3-7, 4-37, 4-39, 4-41
1031700	3-29, 3-30
1031967	2-153
1032036	2-157, 2-159
1032214	2-287
1032232	2-179, 4-35
1032254	2-85
1032292	2-93
1032382	2-51
1032804	2-59
1032805	2-75
1032812	2-101
1033423	2-155
103344	2-119
1033687	2-119
1033739	2-93
1033746	2-101
1033897	2-101
1033899	2-101
1034105	2-43
1036255	2-219
1037311	2-75
1037312	2-75
1037313	2-75
1038966	2-219
10539	2-137, 2-139
10542	2-187
10550	3-35
10552	4-45, 4-47, 4-49, 4-51
10557	3-35
10560	3-35
10561	3-35
10562	3-35
10573	3-5
10575	3-5
10581	3-23
10595	3-23
10606	2-129
10612	2-225
10618	2-161
10620	2-13
10632-1	2-23, 2-193, 2-195
10632-12	2-111
10632-14	2-111, 2-113, 2-115

Part Number	Page Number
10632-18	3-7, 3-11, 3-13, 3-15, 3-17, 3-19
10632-4	2-33
10632-5	2-221
10632-9	3-11, 3-13, 3-15, 3-17, 3-19
10642	2-13
10644	2-13
10652	2-103, 2-105, 2-107, 2-109
10653	2-103, 2-105, 2-107, 2-109
10654	2-103, 2-105, 2-107, 2-109
10661	2-103, 2-105, 2-107, 2-109
10664	2-121, 2-123, 2-125, 2-127
10672	3-3
10678	3-3
10679	2-201
10688	2-23
10693	2-31
10695	2-31
10723	5-3
10724	5-3, 6-3
10740	2-117, 2-119, 2-135
10754	2-103
10830	2-59, 2-75
11211	2-27
11329	2-203
11399	2-51, 2-55, 2-67, 2-69, 2-195
11442-1	2-63, 2-65, 2-103, 2-105, 2-107, 2-109
11635	2-205
11636	3-37
11893	2-21
11984	2-53, 2-79, 2-81, 2-83, 2-85
12267	2-163
12273	2-197, 2-205
12274	2-23
12275	2-199
12277	2-169
12316	2-201
12317	2-181, 2-183
12333	2-137, 2-139
12962	2-25
130041	2-69
13015	2-129
13048	2-53, 2-63
13115	2-149
13124	2-83, 2-85
13156	2-169
13248	2-13, 2-29, 2-31, 2-87, 2-89, 2-91, 2-93, 2-111, 2-113, 2-115, 2-117, 2-119, 2-135, 2-137, 2-139, 2-161, 2-213, 2-215, 2-217
13513	2-137, 2-139
13902	4-29, 4-31, 4-33, 4-35, 4-42
13904	4-29, 4-31, 4-33, 4-35, 4-42
13907	4-27, 4-33, 4-35
14131	2-95, 2-97
14242	2-133
14296	2-37
14432	2-79, 2-81, 2-83, 2-85
14601	2-137, 2-139
14838	2-4, 2-5
14864	2-201
14880	2-201
14983	3-37
150100	2-203
150516	2-69
150525	2-205
15128-1	2-183
15539	2-4, 2-5
15555-1	2-95, 2-97
15555-2	4-49, 4-51
15675	2-203
15678	2-201
16081	2-117, 2-119
16082	2-165
16213	2-137, 2-139
16376	2-157, 2-159
16387	2-57
16455	2-19
16462	2-149
16465	2-151, 2-155
16695	4-7, 4-9, 4-11, 4-15
16735	2-47, 2-49, 2-119
16738	2-53
16931	2-41, 2-43, 2-93, 2-99, 2-101, 2-125, 2-127, 2-143, 2-217, 3-15, 3-17, 3-19
17200	2-23
17414	2-35, 2-63, 2-65, 2-105, 2-107, 2-109
17521	2-65
17980	2-179
19066	2-119, 2-135, 2-203, 3-11, 3-13
19191	2-173, 2-175, 2-177
19311	2-39, 2-41, 2-43
19312	2-59, 2-75
19315	2-39, 2-41, 2-43, 2-59, 2-75
19317	2-59, 2-69, 2-75
19458	2-157
19583	2-131
19644	2-149, 2-153
19747	2-37, 2-51
19760	2-109
19774	2-35
20177	2-47, 2-49
20178	2-173, 2-175, 2-177
20634	2-25
20778	4-39
20806	2-191, 2-193, 2-195
20810	2-197
20811	2-197
20833	2-189
20838	2-113, 2-115
20866	3-5
20885	4-39
20891	3-5, 4-39
20892	4-39
20895	3-5
20922	2-199
20932	3-29, 3-30
20944	3-7
20950	3-7
20951	3-7
20952	3-7
20971	2-217
20988	4-39
20989	4-39
21194	7-5
21195	2-47, 2-49, 2-127
21197	2-39, 2-41, 2-43, 2-47, 2-49, 2-157, 2-159
21198	2-81, 2-143
21207	2-31
21211	2-21
21294	2-35
21586	2-189
21601	2-189
21602	2-189
21603	2-189
21606	2-189
21614	2-189
21657	4-43
21659	4-43
21732	2-99
21791	3-44
21792	5-15, 6-15
21793	5-15, 6-15
21794	5-15, 6-15
21916	4-14, 4-29, 4-31, 4-33, 4-35
21920	4-33, 4-35
21922	4-33
21923	4-33, 4-35
21931	4-33, 4-35
21977	4-33, 4-35
22140	2-111, 2-113, 2-115
222260	2-187
222290	2-211
222375	2-195
222460	2-173, 2-175, 2-177

Part Number	Page Number
222504	2-133, 2-135
22290	2-219
22297	2-125, 2-127
22308-3	2-63
22308-6	2-103, 2-105
22308	2-103, 2-105, 2-107, 2-109
22324	2-105, 2-107
22604	2-131, 4-5
22622	4-7, 4-9
22654	4-9
22727	2-135
22731	2-135
22746	2-13, 3-40
22758	4-31
22775	2-13
22786	3-7
22787	3-7
22790	4-37, 4-41
22911	3-21
22912	3-21
23001	2-187
23002	2-187
23004	2-187
23005	2-187
23006	2-187
23007	2-187
23087	2-199
23088	2-199
23089	2-199
23090	2-199
23156	2-63, 2-65, 2-105, 2-107, 2-109
23271	2-197
23274	3-33
23282	4-37, 4-39
23283	4-37, 4-39
23285	4-37, 4-39, 4-41
23456	3-29, 3-30
23498	2-199
23524-1	2-187
23524	2-27
23574	2-37
23786	2-171
23788	2-135, 2-185
24012	2-87, 2-89
24047	2-103, 2-105, 2-107, 2-109
24299	2-4, 2-5
24339	2-131
24358	2-199, 2-201, 3-7, 4-37, 4-39, 4-41
24555	2-189
24576-1	3-9, 3-19
24576	3-19
24899AM	2-169
24924	2-53
24928-1	2-103, 2-105, 2-107, 2-109
24976	2-65
25014	2-89, 2-91
25046	2-173, 2-175, 2-177
25047	2-59, 2-75
25049	2-137, 2-139
25312	3-25
25610	2-99
25611	2-173, 2-175, 2-177
25730	2-181, 2-183
25736AM	2-181, 2-183
26103	2-27
26395-2	2-95, 2-97, 2-99
26496	2-103, 2-105, 2-107, 2-109
27048	2-63, 2-103, 2-105, 2-107, 2-109
27767	2-63
27980	2-59, 2-75
27989	2-81, 2-143
27991	2-45, 2-47, 2-49
28854	4-11
29192	3-11, 3-13, 3-15, 3-17
29499	2-163
29558	2-163, 2-181
29570	2-69
30013	2-111, 2-113, 2-115
30241	2-5
30251	2-169
30252	2-169
30253	2-169
30255	2-169
30389	2-53, 2-63, 2-65
30407	2-35
30533	3-24
311828	2-69
31354	4-7, 4-9, 4-11, 4-15
31373	4-7, 4-9
31375	4-15
31377	4-7, 4-9
31381	4-15
31384	4-7, 4-9
31526	2-35
31568	2-149, 2-151, 2-153, 2-155
31599	2-117, 2-119
31602	2-149, 2-151, 2-153, 2-155
31613	2-3, 2-157, 2-159, 2-3
31646	2-163
31722	2-153
31755	2-111, 2-113
31922	3-9
32129	2-53, 2-205
32270	2-13
32376	2-35
32483	2-39, 2-41, 2-43, 2-65, 2-91, 2-93, 2-101, 2-117, 2-119, 2-127, 2-137, 2-139
32485	2-45, 2-47, 2-49, 2-127, 2-143
32486	2-143
32490	2-21, 2-23, 2-59, 2-75, 2-99, 2-101, 2-115, 2-127, 2-133, 2-157, 2-159
32491	2-39, 2-41, 2-43, 2-45, 2-51, 2-85, 2-93, 2-101, 2-119, 2-123, 2-125, 2-127, 2-133, 2-135, 2-143, 2-205, 2-217, 3-15, 3-17, 3-19
32492	2-39, 2-41, 2-43, 2-45, 2-47, 2-81, 2-83, 2-85, 2-93, 2-127, 2-137, 2-139, 2-143, 2-157, 2-159
32493	2-39, 2-41, 2-43, 2-187
32494	2-185
32495	2-171
32508	2-201
32613	2-201
32614	2-201
32662	2-185
32669	2-201
32716	2-173, 2-177
32731	2-185
32746	2-4, 2-5
32969	2-133
32978	2-99, 2-101
32980	2-49, 2-99, 2-101, 2-197
32981	2-31, 2-101, 2-137, 2-139, 2-217
32982	2-65
32983	2-51
32987	2-131
330710	3-44
33123	2-181
33295	3-3
33404	2-167, 2-173, 2-175, 2-177
33580	4-3, 4-5
33612	2-21
33817	2-135
33951	2-53, 2-61
34065	2-35
34096	2-27
34176	4-15
34178	4-3, 4-5
34179	4-3, 4-5
34312	2-15, 2-199
34323	2-31
34355	2-149, 2-153
34357	2-121, 2-123, 2-125, 2-127
34359	2-27, 2-29, 2-161, 2-163, 2-167, 2-175

Part Number	Page Number
34390	2-19, 2-29, 2-157, 2-159, 2-179
34725	2-27
34823	2-129
34848	3-9
34868	2-33
35002	2-121
35756	2-45, 2-47, 2-49
35843	3-33
35980	2-37
36014	5-23, 6-23
36048	5-15, 6-15
36050	2-3, 2-53, 2-3
361046	2-153
36164	5-21, 6-21
36165	2-35, 2-55, 2-67, 2-69
36192	3-20, 3-21, 3-28
36268	5-3, 5-6, 6-3, 6-6
363215	2-133, 2-135
36328	2-21, 2-169
363543	2-195
36438	3-19
36439	3-19
36466	2-183
365080	2-217
365164	2-193
36643	2-181
36658	2-25
36661	2-25, 2-97, 2-99, 2-101
36663	2-25
36665	2-25
36666	2-25
368132	2-115
369704	2-23
369719	2-63
369723	2-63
369745	2-83, 2-85
369746	2-83, 2-85
369747	2-83, 2-85
369781	2-133, 2-163, 2-167
369810	2-13
369811	3-5
369850	2-191, 2-193, 2-195, 4-39
370008	2-5
370009	2-5
370016	2-5
370076	2-5
370090	2-5
370092	2-5
370102	5-17, 6-17
370103	5-17
370829	5-9, 6-9
370847	6-3
370848	6-3
370850	6-3
370851	6-5
370852	6-11
370853	6-11
370854	6-11
370855	6-13
370873	6-3
370875	6-24
370876	5-21, 6-21
370888	6-22
370889	6-22
370890	6-22
370891	6-22
370892	6-22
37127	5-11
371500	2-51
371502	2-51
371503	2-51
371504	2-51
371505	2-51
371507	2-39
371508	2-39, 2-41, 2-43
371509	2-39, 2-41, 2-43, 2-45, 2-59, 2-75
371512	2-39, 2-41, 2-43
371516	2-39, 2-41, 2-43
371517	2-39
371518	2-39, 2-41, 2-43
371519	2-39, 2-41, 2-43
371520	2-39, 2-41, 2-43
371526	2-45, 2-47, 2-49
371527	2-45, 2-47, 2-49
371528	2-45
371529	2-45
371532	2-55
371538	2-55, 2-67
371553	2-59, 2-75
37157	5-5, 5-11
371572	2-39
371573	2-89, 2-91
371646	4-45, 4-47, 4-49
371647	4-45, 4-47
371649	4-49, 4-51
371651	4-45, 4-47, 4-49, 4-51
371653	4-45, 4-47, 4-49, 4-51
371654	4-45, 4-47, 4-49, 4-51
371658	4-45, 4-47, 4-49, 4-51
371660	4-45, 4-47, 4-49, 4-51
371661	2-97
371662	2-97
371665	4-45, 4-47
371666	4-45, 4-47
371669	4-45, 4-47
371713	4-45, 4-47
371714	4-45, 4-47, 4-49, 4-51
371715	4-45, 4-47, 4-49, 4-51
371716	4-49, 4-51
371718	4-45, 4-47, 4-49, 4-51
371749	2-67, 2-69
371750	2-67, 2-69
371754	2-67, 2-69
371755	2-67, 2-69
371757	2-67, 2-69
371758	2-67
371759	2-67, 2-69
371761	2-39, 2-41, 2-43
371762	2-39
371763	2-55
371764	2-55, 2-67, 2-69
371765	2-55
371766	2-55, 2-67, 2-69
371767	2-55, 2-67, 2-69
371768	2-67, 2-69
371770	2-45
371875	2-59, 2-75
371877	2-59, 2-75
371891	7-3
371894	2-67, 2-69, 4-45
371895	2-67, 2-69, 4-47
371896	2-55, 4-49
371897	2-55, 4-51
371898	4-49, 4-51
371899	4-49, 4-51
371901	4-49
371902	4-49, 4-51
371908	4-49, 4-51
371921	2-265
372235	2-278, 2-279
372236	2-278, 2-279
372237	2-278, 2-279
372251	7-7
372440	2-99, 2-101
372445	2-41, 2-43
372456	2-41, 2-43
372457	2-41
372458	2-41, 2-43
372464	7-7
372466	2-57, 2-59, 2-75
372470	2-59, 2-71, 2-75
372472	2-57, 2-59, 2-71, 2-75
372473	2-41, 2-43
372474	2-41, 2-43
372479	2-41, 2-43
372482	2-57
372483	2-57, 2-59, 2-71, 2-75
372484	2-57, 2-71
372488	2-57
372489	2-57, 2-71
372490	2-57, 2-71
372491	2-91
372492	2-57, 2-71
372493	2-57, 2-71
372495	2-71
372496	2-71
372497	2-71
372498	2-71
372500	2-71
372501	2-71
372503	2-71
372504	2-71
372505	2-71
372506	2-71
372507	2-71
372508	2-71

Part Number	Page Number
372510	2-71
372511	2-71
372512	2-71
372514	2-71
372515	2-71
372516	2-71
372517	2-71
372518	2-71
372523	2-71
372526	2-71
372527	2-71
372528	2-71, 2-75
372529	2-75
372531	2-71
372539	2-76
372545	2-59, 2-71, 2-75
372569	2-71
372577	2-71
372579	2-76
372581	2-71
372608	2-71
372610	2-71
372611	2-71
372612	2-71
372615	2-71
372859	2-71
372860	2-57
372891	2-57, 2-59, 2-71
372899	2-71
372937	2-69
372942	2-99
373317	4-27
373327	4-27
373336	4-27
373337	4-27
373340	2-165, 4-9
373346	4-27
373391	4-27
373393	4-27
373394	4-27
373395	4-27
373398	4-27
373402	4-27
373429	4-27
373434	4-27
373482	4-35
373485	2-143, 4-27
373486	2-143, 4-19
373493	4-27
373494	4-27
373499	4-27
373500	4-27
373501	4-27
373502	4-27
373503	4-27
373504	4-19
373505	4-19
373506	4-19
373507	4-19
373508	4-19
373509	4-19
373510	4-19
373511	4-19
373512	4-19
373513	4-19
373514	4-19
373515	4-19
373516	4-19
373517	4-19
373518	4-19
373519	4-19
373520	4-19
373521	4-19
373522	4-19
373523	4-19
373524	4-19
373525	4-19
373526	4-19
373527	4-19
373528	4-19
373529	4-19
373530	4-19
373531	4-19
373532	4-19
373533	4-19
373534	4-19
373535	4-19
373536	4-19
373537	4-19
373538	4-19
373539	4-19
373540	4-19
373590	4-35
373611	4-35
373622	4-35
373624	4-35
373682	4-35
374127	2-53, 2-61
374153	2-65
374155	2-65
374157	2-65
374274	6-24
374298	4-23
37448	4-21
374507	2-21
374532	2-63
37454	4-21
374560	2-131
374561	2-131
374563	2-131
374565	2-131
374568	3-31
374585	2-191
374586	2-179
374589	2-37
374590	2-53
374591	2-61
374592	2-53, 2-61
374599	2-87, 2-89
37460	4-21
374604	3-41
374605	3-41
374607	3-43
374608	3-43
374613	2-173, 2-175, 2-177
374615	2-63
37462	4-21
374625	2-53, 2-61
374628	2-165
374631	3-5
374648	2-63
374649	2-63
374688	3-42
374689	3-42
374690	2-103, 2-105, 2-107, 2-109
374700	2-193
374701	2-193
374704	2-193, 2-195
37471	4-21
374712	2-193
374724	2-193, 2-195
374725	2-179
375014	3-29, 3-30
375193	2-37
375205	2-37
375322	3-3
375323	2-37
375410	2-9, 2-11
37555	4-7, 4-9, 4-11, 4-15
375586	2-117, 2-119
375718	2-53, 2-61
37616	4-3, 4-5
37704	4-21
377084	2-211
377351	2-173, 2-175, 2-177
37756	4-3, 4-5
37766	4-3, 4-5
379001	4-37
379030	2-173, 2-175, 2-177
379120	2-19
380726	2-117
380748	2-127
382516	2-221
38255	4-3, 4-5
383014	2-65
383165	2-221
383170	2-65
384971	2-76
384973	2-76
384974	2-59, 2-75
384975	2-75
384977	2-75
384978	2-75
384979	2-76
384985	2-59, 2-75
384986	2-75
384996	2-75
384998	2-279
384999	2-279

Part Number	Page Number
385000	2-59, 2-75
385001	2-59, 2-75
385002	2-59, 2-75
385003	2-59, 2-75
385004	2-59, 2-75
385005	2-59, 2-75
385006	2-59, 2-75
385007	2-59, 2-75
385008	2-59, 2-75
385009	2-101
385010	2-279
385011	2-76
385012	2-75
385013	2-76
385014	2-75
385015	2-75
385016	2-75
385017	2-75
385018	2-279
385019	2-43
385411	2-35
385414	2-53
385417	2-35
385419	2-87
385420	2-87
385421	2-185
385423	2-185
385425	2-63
385426	2-37
385427	2-185
385428	2-213
385431	2-35
385433	2-37
385434	2-35, 2-213
385435	2-53
385436	2-61
385437	2-53, 2-61
385439	3-44
385665	2-197
388134	2-13
388555	6-13
38968	4-3, 4-5
391451	2-199, 2-205
391890	4-49
391891	4-45
391946	3-5
39210	2-117, 2-119, 2-167
392258	2-69
392561	2-39
392562	2-265, 2-278
392563	2-39
392565	2-39, 2-41, 2-43
392570	2-55, 2-67, 2-69
392574	2-39, 2-41
392575	2-39, 2-41, 2-43
392576	2-39, 2-41, 2-43
392577	2-81
392580	2-155
392581	2-97
392582	2-97
392583	2-123, 2-125
392584	2-123, 2-125
392585	2-89
392600	2-139
392604	2-143
392607	2-153
392608	2-153
392609	2-143
392611	2-45, 2-47, 2-49
392629	2-101
392636	2-97, 2-99
392638	2-123
392639	2-81
392641	2-81
392646	2-153
392647	2-123, 2-125, 2-127
392648	2-81
39272	2-129
39277	2-39, 2-41, 2-43, 2-83, 2-85, 2-119, 2-217
39278	2-127
39279	2-143, 2-157, 2-159
39284	2-93
39285	2-93, 2-137, 2-139
39309	2-35
39313	2-133
393203	2-115
393216	2-123
393223	3-44
393227	2-49
393255	2-195
393264	2-89
39349	2-133
39350	2-29, 2-117, 2-119, 2-131, 2-135
393662	7-7
393663	7-7
393806	7-7
393807	7-7
393808	7-7
393809	7-7
393810	7-7
393811	7-7
393812	7-7
393813	7-7
393814	7-7
393815	7-7
393816	7-7
393817	7-12
393818	7-12
393819	7-12
393820	7-12
393821	7-12
393822	7-12
393823	7-12
393824	7-3, 7-9, 7-11, 7-12
393825	7-12
393826	7-11, 7-12
393827	7-12
393828	7-12
393829	7-12
393830	7-12
393831	7-12
393832	7-7
393833	7-7
393834	7-11
393835	7-11
393836	7-11
393837	7-11
393838	7-11
393839	7-11
393840	7-11
393841	7-11
393842	7-11
393843	7-11
393844	7-11
393845	7-11
393846	7-11
393848	7-9
393849	7-9
393850	7-9
393851	7-9
393852	7-9
393853	7-9
393854	7-9
393855	7-9
393856	7-9
393857	7-9
393858	7-9
393859	7-9
393860	7-9
393861	7-9
393862	7-9
393863	7-9
393864	7-11
393865	7-9
393866	7-11
393867	7-9
393868	7-9
393869	7-9
393870	7-9
393871	7-9
393872	7-7
393873	7-11
393874	7-11
393875	7-11
393876	7-11
393877	7-11
393878	7-11
393879	7-11
393880	7-11
393881	7-11
393882	7-7
393883	7-7
393884	7-7
393886	7-7
393887	7-7
393888	7-7
393889	7-7
393890	7-7

Part Number	Page Number
393895	7-3
393896	7-3
393897	7-3
393898	2-55, 2-57, 2-69, 2-71, 7-3, 7-5
393899	7-3
393900	7-3
393901	7-3
393902	7-3
393903	7-3
393904	7-3
393905	2-55, 2-57, 2-69, 2-71
393906	2-55, 2-57, 2-69, 2-71
393907	2-55, 2-57, 2-69, 2-71
393908	2-55, 2-57, 2-69, 2-72
393909	2-55, 2-57, 2-69, 2-72
393910	2-55, 2-57, 2-69, 2-72
393911	2-55, 2-57, 2-69, 2-72
393912	2-55, 2-57, 2-69, 2-72
393913	2-55, 2-57, 2-69, 2-72
393914	2-55, 2-57, 2-69, 2-72
393915	2-55, 2-57, 2-69, 2-72
393916	2-55, 2-57, 2-69, 2-72
393917	7-3
393918	7-3
393919	7-5
393920	7-5
393921	7-5
393922	7-5
393923	7-5
393924	7-5
393925	7-5
393926	7-5
393927	7-5
393928	7-5
393929	7-5
393930	7-5
393931	7-5
393932	7-5
393933	7-3
393934	7-3
393935	7-3
393936	7-3
393937	7-3
393938	7-3
393939	7-5
393940	7-5
393941	7-5
393942	7-5
393943	7-5
393946	7-5
393947	7-5
393948	7-5
393949	7-5
393950	7-5
393951	7-3
393952	7-3
393953	7-3
393954	7-3
393955	7-3
393956	7-3
393957	7-3
393958	7-3
393959	7-3
393960	7-3
393961	7-3
393962	7-3
393963	7-3
393964	7-3
393965	7-5
393966	7-5
393967	7-5
393972	2-67, 2-69
393973	2-39
393975	2-39
393982	2-51
393984	2-39, 2-57, 2-59, 2-71, 2-75
393994	2-39, 2-41, 2-43, 2-45
393998	2-45, 2-47, 2-49
394916	2-278, 2-279
39527	4-15
39534	2-31, 2-217
396278	2-155
39703-2	2-3, 2-3, 5-3, 6-3
39780-1	2-33
397889	2-211
39810	2-143
398208	2-133
398279	2-83, 2-85
398346	2-3, 2-3
398468	2-203
398474	2-203
40362	2-157, 2-159
40585	2-97
40607	2-33, 2-63
40678	2-35, 3-9, 3-18
40814	2-185
41016	2-97, 2-99
41130	2-213, 2-215, 2-217
41140	2-95
41142	2-47, 2-49
41178	2-31, 2-91, 2-93, 2-117, 2-119
41185	2-121
41186	2-13, 2-47, 2-49, 2-111, 2-113, 2-115, 2-119, 2-187, 2-213, 2-215, 2-217
41187	2-37, 2-39, 2-41, 2-43, 2-137, 2-139, 2-141, 2-185
41305	2-181, 2-183, 2-187
41342	2-187
41421	2-201
41430	2-31, 2-87, 2-89, 2-91, 2-137, 2-139, 2-167
41440	3-3
41451	2-201
41454	2-201
41579	2-5, 2-205
41619	2-9, 2-11, 2-177, 2-181, 2-185
42011	2-45, 2-47, 2-49
42120-1	2-27
42213	2-141
42215	2-157
42223	2-131, 2-141, 2-143
42226	2-29, 2-141, 2-161
42368	2-99, 2-101
43290	2-167, 2-171
43611	2-113, 2-115
43844	2-53, 2-61, 2-95, 2-97, 2-99, 2-101, 2-113, 2-115, 2-127, 2-191, 2-193, 2-195, 3-7
43952	2-113, 2-115
44078	2-219
44681-1	3-13, 3-17
44681-2	3-13, 3-17
44681	3-13, 3-17
44868	2-31, 2-143, 2-157, 2-159, 2-173, 2-175, 2-177
44869	2-29, 2-117, 2-119, 2-135, 2-157, 2-159, 2-169, 2-179
44906	3-33
45261	3-35
45272	3-15, 3-17
45622	4-3, 4-5
45623	4-3, 4-5
45628	4-7, 4-9, 4-11, 4-15
45779	3-11, 3-13, 3-15, 3-17
45780	2-13
46236	2-19, 2-25, 2-33, 3-15, 3-17
46481	2-179
46563	2-135
46611	2-65
46785-1	2-185
47167	2-55, 2-57, 2-67, 2-69
47178-6	2-13
47313A	2-53
47501	2-165
47504	2-37
47512	2-119
47522	2-131
47585	2-219
47638	2-159
47701	3-3
47720	2-63, 2-105
47745	2-165
47752	2-157, 2-159
47801	2-27, 2-131
48079	2-173, 2-175, 2-177, 2-181
48126	2-95, 2-97, 2-99, 2-101
48267	2-95, 2-97, 2-99

Part Number	Page Number
48282	2-105
48570	3-9
48617	2-151, 2-155
48629	2-117, 2-119
48734	3-29, 3-30
48739	3-29, 3-30
48742	3-29
48743	3-30
48813	4-14
48988	3-3
49263	2-221
49266	2-63, 2-99, 2-101, 2-115, 2-137, 2-139, 2-177, 2-179, 2-191, 2-193, 2-197, 2-199, 3-7, 3-9, 3-11, 3-13, 3-19
49800	3-37
49826	2-185
49924	2-173, 2-175, 2-177
49934	2-51
50121	2-29, 2-31, 2-167, 2-171
50238	2-199, 3-3
50256	2-199, 3-3
50304	3-28
50335	2-39, 2-41, 2-43, 2-99, 2-101
50902	2-47, 2-49, 2-173, 2-175, 2-177
50960	2-141, 2-157
51109	2-135
51225	2-165, 3-35
51305	2-69, 2-111, 2-113, 2-115, 2-127
51317	2-27, 2-169
51322	2-113, 2-115
51338AM	2-131, 2-133, 3-41, 3-42, 3-43
51339	2-131, 2-133
51448	2-169
51449	2-169
51534	2-27
51538	2-165, 3-33, 3-35
51560-3	2-79, 2-81
51560-5	2-83, 2-85
51564	2-37, 2-169
51570	3-18
51787	2-15, 3-28
51839	2-63, 2-65, 2-81
52142	2-121, 2-123, 2-125, 2-127
52296	2-163, 2-167
52386	4-23, 4-25
52402	2-117, 2-119, 2-157, 2-159
52405	4-3, 4-5
52911	2-143
52929	2-117, 2-119
53029	2-61, 2-95
53076	2-141, 2-143
53077	2-111, 2-113, 2-115
53395-2	2-105
53400-1	2-103, 2-105, 2-107, 2-109
53400-4	2-103, 2-105, 2-107, 2-109
53435	4-7
53466	2-31, 2-125, 2-161, 2-165, 2-195, 2-205
53576	3-33
53610	3-33
53786	2-25
53845	3-22
53910	2-27
53915	2-27
53965	2-165
53984	2-165
53985	2-169
54013	2-3, 2-21, 2-3
54014	2-3, 2-21, 2-3
54050	2-165
54051	2-131
54052	2-131
54086	2-131
54087	2-131
54089	2-3, 2-21, 2-3
54093	2-111, 2-113
54096	2-27, 2-167, 2-171
54121	2-25
54140	2-99
54182	2-7
54184	2-7
54190	2-7
54192	2-7
54194	2-141
54197	2-7
54204	2-169
54274	2-29, 2-31, 2-87, 2-89, 2-111, 2-113, 2-115, 2-117, 2-119, 2-135, 2-137, 2-139, 2-161, 2-179, 2-213, 2-215, 2-217
54275A	2-31, 2-213, 2-215, 2-217
54333	2-99, 2-191, 2-193, 2-195, 2-203, 2-205, 2-207, 5-3, 6-3
54390	2-133
54396	2-39, 2-41, 2-43, 2-123, 2-125
54400	2-133, 2-163, 2-167
54437	2-133
54467	2-133
54567	2-133
54577	2-133
54607	2-135
54615	2-13
54618AM	2-185
54659	2-169
54660	2-165
54680	2-169
54848	2-163, 2-167
54878	2-169
54911-32	2-121, 2-123, 2-125, 2-127, 5-3, 6-3
54922	2-5
54923	2-5
54925	2-5
54927	2-5
55021	2-21
55035	2-201
55130	2-25
55248	3-11, 3-13, 3-19
55272	3-11, 3-13, 3-15, 3-17
55347	2-39, 2-41, 2-43
55433	2-9, 2-11
55586	2-19, 2-29, 2-131, 2-159, 2-161, 2-169, 2-173, 2-177, 2-217
55685	2-135, 2-219
55686	2-117, 2-119
55697	2-153
55700	2-149, 2-153
55779	2-169
55864	2-3, 2-21, 2-3
55879	2-21
55884	2-21
55889	2-21
55890	2-3, 2-21, 2-3
55892	2-21
55893	2-27
55914	2-27
55926	4-27
55930	4-23, 4-25
55932	4-23, 4-25, 4-27
55937	4-23, 4-25
55939	4-23, 4-25
55941	4-23, 4-25
56166	2-187
56185	2-219
56186	2-211, 2-225, 3-11, 3-13, 3-15, 3-17, 3-19
56346	2-221
56610	2-25
56624	2-133, 2-163, 2-167
56690	2-99, 2-157, 2-179, 2-219
56692	2-157, 2-159, 2-165, 2-213, 2-215, 2-217
56820	2-157
56820	2-117, 2-119, 2-131, 2-179
56821	2-143, 2-217
56835	2-141
56855	3-35
56872	2-7, 3-31
56890	2-7
56914	2-9, 2-11, 3-31

Part Number	Page Number
56976A	2-63, 2-103, 2-105, 2-107, 2-109
56992	2-13
57160	2-151, 2-155
57164	2-225
57167	2-225
57173	2-151, 2-155
57219	2-151, 2-155
57220	3-11, 3-13
57224	2-193
57297	2-103, 2-105, 2-107, 2-109
57411	2-175
57479	2-111, 2-113, 2-115, 2-157, 2-159
57487	2-155
57751	2-225, 3-7, 3-11, 3-13, 3-15, 3-17, 3-19
57772	2-211
57803	2-225, 3-7, 3-11, 3-13, 3-15, 3-17, 3-19
57804	2-278, 2-279
57807	2-191, 2-193, 2-195
57897	4-23, 4-25
57934	2-53
57944	2-149, 2-153
57949	2-149, 2-153
57963	2-151, 2-155
57966	2-151, 2-155
57971	2-149
57972	2-151, 2-155
57988	2-19, 2-135, 2-159
58078	2-27
58103	2-21
58114	2-213, 2-215, 2-217
58120	2-3, 2-79, 2-81, 2-3
58121	3-39
58366	2-37, 2-41, 2-43, 2-143, 2-225
58482	2-25
58483	2-25
58494	2-15, 2-23, 2-171, 3-20, 3-21, 3-28
58500	2-23
58518	3-11, 3-15
58519	3-11, 3-15
58520	3-11, 3-15
58524	2-23
58538	2-79, 2-81
58589	2-103, 2-105, 2-107, 2-109
58590	2-103, 2-105, 2-107, 2-109
58770	2-9, 2-11
58842	2-131
58846	2-53
58858	2-157, 2-159
59004	2-23
59009	2-135
59015	2-95
59105	2-21
59192	2-9, 2-11
59375	2-35
59378	4-14
59431	2-5
59432	2-5
59440	2-5
59442	2-23
59447	3-11, 3-13
59448	2-23
59514	2-9
59537	2-11
59538	2-9
59542	2-19
59545	2-25
59579	2-151, 2-155
59629	2-25
59656	2-31
59658	2-179
59668	2-137, 2-139
59672	2-137, 2-139
59680	2-3, 2-21, 2-3
59681	2-3, 2-21, 2-3
59685	2-3, 2-21, 2-3
59686	2-3, 2-21, 2-3
59687	2-3, 2-21, 2-3
59688	2-3, 2-21, 2-3
59692	2-9, 2-11
59735	2-31
59737	2-23
59738	2-23
59739	2-23
59849	2-19
59899	2-163
59949	2-13
59962	3-9
59965	2-19
59966	2-27
59967	2-31
59971	2-221
59976	2-221
59977	2-221
60284	3-9
60288	3-11, 3-13
60293	2-129
603012	2-205
60559	2-35
60751	3-9
60806	5-5, 5-6, 6-5, 6-6
60812	5-22
60813	5-22, 6-22
60814	5-22, 6-22
60817	5-6, 6-6
60833	5-5, 5-13, 5-19, 6-5, 6-13, 6-19
60834	6-5, 6-13
60836	5-21, 6-21
60846	5-24, 6-24
60846AM	2-3, 2-3
60938	2-35, 5-9, 6-9
61363	2-35, 2-45, 2-47, 2-49
61490	4-7, 4-11, 4-15
61529	2-35
61531	2-35
61683	2-111, 2-113, 2-115
61891	4-23, 4-25
61920	3-19
61931	2-35
62100	2-149, 2-153
62377	2-125
62378	2-123, 2-125
62389	2-141
62595-16	2-17
62595-6	2-23
630094	2-65
63248-1	2-5
63248-2	2-5
63248-3	2-5
63248-4	2-5
63292	2-137, 2-139
63310	2-35
63430	3-28
63448	3-28
63451	3-28
63516	2-169
63695	2-37, 2-39, 2-41, 2-43
63810	2-53, 2-63, 2-65, 2-71, 2-75, 2-81
63818	2-111, 2-113, 2-115
63923	4-43
63987-1	2-191, 2-193, 2-195
64038	5-17, 6-17
64173AM	2-181, 2-183
64425	2-181, 2-183, 2-189
64533	2-15
64535	2-23
64543	2-15
64545	2-15
64595	2-23
64651	2-219
64655	2-219
64740	2-69
64743	2-207
64778	2-207
64886	2-131
64887	2-131
64899	2-45, 2-47
65145-1	2-141, 4-27
65215	3-40
65221	2-3, 2-121, 2-123, 2-125, 2-127, 2-3
65224	2-151, 2-155
65441	2-137, 2-139
65587	2-191
65869-5	2-3, 2-3
66018	2-5
66019	2-5
66176	3-33
66177	3-33
66178	3-33

Part Number	Page Number
66179	3-33
66185	2-21
66211	2-133
66213	2-133
67004	3-28
67310	2-135, 2-141
67366	2-195
67683	2-157, 2-159
67767	2-99, 2-103, 2-105, 2-107, 2-109, 2-127, 2-191, 2-193, 2-195
68866	2-137, 2-139
68872	2-129
68873	2-129
69097	2-61
69173	2-31, 2-179
69234	2-129, 2-193
69582	2-181, 2-183
69784	2-197, 3-5
69904	2-7
69915	2-7
69931	2-9, 2-11
69963	2-5
69998	2-185
70006	2-157, 2-159
70094	4-23, 4-25
70095	4-23, 4-25
70096	4-27
70097	4-23, 4-25
70098	4-23, 4-25
70099	4-23, 4-25
70100	4-23, 4-25, 4-27
70101	4-23, 4-25
70103	4-23, 4-25
70157	2-127
70158	2-133
70160	2-35
70161	2-133
70173	2-95, 2-97, 2-99
70178	2-23
70182	2-23
70185	2-23
70219	2-219
70222	3-31
70223	3-31
70224	3-31
70226	3-31
70227	3-31
70228	3-31
70229	3-31
70230	3-31
70275	2-9
70276	2-11
70622	2-219
70623	2-219
70628	2-15
70636	2-121
70709	2-219
70717	2-219
70767	2-95
70832	2-87, 2-89
70876	2-53, 2-61
71167	3-5
71168	3-5
71199	2-189
71425	2-191
71427	2-55
71477	3-22
71540	2-165
71543	3-15, 3-17
71544	3-19
71557	2-149, 2-153
71607	2-181, 2-183
71608	2-181, 2-183
71665	2-191, 2-193, 2-195
71719	2-119
71743	2-153
72065	2-23
72067	2-3, 2-3
72068	2-3, 2-3
72069	2-9, 2-11
72071	2-21
72086	3-33
72087	3-33
72114	3-11, 3-13
72120	2-9, 2-11
72159	2-21
72178	3-9
72458	2-169
72560	2-99
72599	2-171
72635	2-213, 2-215, 2-217
72663	2-173, 2-175, 2-177
72688	2-111, 2-113, 2-115
72699	2-37
72715	2-185
72735	2-133
72740	2-163
72741	2-163
72743	2-163
72763	2-171, 2-185
72768	2-171
72773	2-173, 2-175, 2-177
72775	2-173, 2-175, 2-177
72776	2-171
72777	2-173, 2-175, 2-177
72805	2-19
72814	2-13
72824	2-17
72832	2-173, 2-175, 2-177
72833	2-171
72836	2-171
72837	2-183
72838	2-183
72839	2-173, 2-175, 2-177
72842	2-173, 2-177
72847	2-167
72848	2-167
72849	2-167
72858	2-167
72859	2-177
72860	2-173
72864	2-183
72884	2-11
72887	2-11
72888	2-9
72895	2-19
72897	2-19
72898	2-19
72899	2-19
72910	2-187
72919	2-185
72926	2-131
72934	2-181, 2-183
72945	2-177
72946	2-177, 3-35
72968	2-7, 2-9, 2-11, 2-21, 3-31
72969	2-23
72970	2-13, 2-211, 2-225
72971	2-23
72977	2-129
72978	2-81
72980	2-21
72981	2-21
72989	3-7
72990	3-7
72991	3-7
73017	2-61
73020	2-63
73027	2-219
73028	2-87
73034	2-197
73061	2-219
73068	2-19
73072	2-37
73077	2-19
73089	2-163, 2-187
73090	2-173, 2-175, 2-177, 4-11
73093	2-219, 4-17
73098	2-117, 4-12
73101	2-141, 4-21
73102	4-23
73106	2-111
73107	2-149
73108	2-117, 2-119, 2-135
73109	2-141
73111	2-141
73112	2-213, 2-215, 2-217, 4-13
73113	2-121
73142	2-197
73145	2-199, 3-3
73147	2-199, 3-3
73149	2-201
73205	2-223
73230	2-223
73234	2-223
73235	2-223

Part Number	Page Number
73239	2-223
73258	2-169
73260	3-7, 4-43
73261	2-167
73266	2-121
73270	2-213, 2-215, 2-217
73281	2-131
73289	2-37
73302	2-19
73320	2-25
73321	2-25
73322	2-25
73323	2-25
73342	2-197, 4-37, 4-39, 4-41
73370	2-185
73372	2-185
73375	2-185
73377	2-21
73397	2-31
73399	2-29
73403	3-18
73404	3-20
73405	3-15, 3-17
73408	3-20
73411	2-137, 2-139
73412	3-20, 3-21
73421	3-19
73423	2-137
73425	3-9
73430	2-141, 2-143, 4-42
73433	3-3
73440	3-9
73446	2-37
73455	3-9
73457	3-11, 3-13
73461	3-15
73463	3-17
73468	2-197, 3-3
73470	3-18
73478	3-3
73817	2-61
73917	5-3, 5-15, 6-3, 6-15
73920	5-3, 6-3
73921	5-3, 6-3
73927	5-6, 6-6
73936	5-6, 6-6
73937	5-19, 6-19
73950	5-3, 6-3
73954	5-19, 6-19
73958	5-3, 6-3
73967	5-19, 6-19
73970	5-19, 6-19
73975	5-3
73977	5-22
73978	5-22
73979	5-22
73980	5-22
73981	5-22
73982	5-22
73995	2-3, 2-3, 5-21, 6-5, 6-21
73996	5-23, 6-23
74058	2-121
74068	2-217
74094	4-7, 4-9, 4-11, 4-15
74095	4-11, 4-15
74098	4-3, 4-5, 4-9, 4-11, 4-15, 4-29, 4-31, 4-33, 4-35
74099	4-11, 4-15, 4-19
74100	4-7, 4-9, 4-11, 4-15
74101	4-7, 4-9
74122	4-3, 4-5
74123	4-3, 4-5
74125	4-3, 4-5
74137	4-3, 4-5
74145	4-31
74162	2-131, 4-3
74165	4-3, 4-5
74166	4-3, 4-5
74167	4-3, 4-5
74168	4-3, 4-5
74171	4-3, 4-5
74174	4-15
74175	4-11
74177	4-11
74178	4-11
74180	4-25, 4-27
74183	4-17
74185	4-17
74192	4-17
74193	4-17
74196	4-17
74198	4-21
74199	4-21
74200	4-21
74201	4-21
74202	4-21
74203	4-21
74204	4-21
74205	4-21
74206	4-21
74207	4-21
74208	4-21
74209	4-21
74210	4-21
74211	4-21
74212	4-21
74213	4-21
74221	4-23, 4-25
74222	4-17
74225	4-23, 4-25, 4-27
74226	4-23, 4-25, 4-27
74227	4-23, 4-25
74229	4-23, 4-25
74230	4-23, 4-25
74231	4-17
74232	4-17
74233	4-12, 4-13, 4-14
74234	4-17
74235	4-23, 4-25
74236	4-17
74237	4-23, 4-25, 4-27
74238	4-23, 4-25, 4-27
74239	4-23, 4-25
74240	4-21
74241	4-17
74242	4-17
74243	4-17
74244	4-17
74245	4-17
74247	4-21
74248	4-23, 4-25
74249	4-3, 4-5
74250	4-7, 4-9, 4-11, 4-15
74375	3-33
74379	3-33
74380	3-33
74381	3-33
74382	3-33
74383	3-33
74402	2-61
74409	2-23
74443	2-53, 2-61
74468	2-169, 4-15
74469	4-23, 4-25
74509	5-15, 6-15
74516	5-3, 6-3
74527	5-15, 6-15
74536	5-7, 6-7
74538	5-5, 5-23, 6-5, 6-23
74545	5-19, 6-19
74548	5-19, 6-19
74552	5-19, 6-19
74561	5-11, 6-11
74944	2-121, 2-123, 2-125, 2-127
75050	2-189
75272	2-13
75375	2-117, 2-119
75456-3	2-213, 2-215, 2-217
75456-4	2-213, 2-215, 2-217
75520	2-167
75611	2-197, 2-199
75635AM	3-29, 3-30
75934	2-137, 2-139
75968	2-219
76099	2-9, 2-11
762521	2-13
76315	2-141
76570	2-85, 2-93
76736	2-95
76762	2-51, 2-149, 2-153
76943	2-189
76955	2-47, 2-49, 2-115
76956	2-45, 2-51

Part Number	Page Number
76957	4-27
769806	2-67, 2-69
769808	2-55, 2-67
77097	2-19, 2-27, 2-29, 2-31, 2-161, 2-165, 2-167, 2-171, 2-173, 2-177, 2-179, 2-187, 2-213, 2-215
77098	2-161
77211	2-13
77221	2-288
77222	2-213, 2-215, 2-217
77224	2-185
77227	2-189
77228	2-189
77234	2-201
77235	2-13
77237	3-5
77239	2-141
77260	2-179
77272	2-189
77273	2-185
77275	2-185
77276	2-185
77277	2-185
77287	2-87
77289	2-121
77297	2-7
77298	2-7
77302	2-151, 2-155
77303	2-149, 2-153
77304	2-149, 2-153
77305	2-149, 2-153
77306	2-149, 2-153
77307	2-149, 2-153
77308	2-149
77309	2-149
77311	2-151, 2-155
77312	2-149
77314	2-149
77315	2-149, 2-153
77316	2-149
77320	2-213, 2-215, 2-217
77322	3-28
77331	2-181
77333	2-181
77334	2-191, 2-193
77335	2-163
77336	2-163
77337	2-151, 2-155
77338	2-149
77343	2-197, 2-199
77345	2-131
77347	2-181, 2-183
77352	2-288
77359	2-151, 2-155
77362	2-121, 2-123
77375	2-23
78122	2-103, 2-105, 2-107, 2-109
78143	2-121, 2-141
78398	3-3, 4-37, 4-41
78730	2-3, 2-157, 2-159, 2-3
78732	3-11, 3-13
78740	2-197
78750	2-123, 2-125
78775	2-151, 2-155
78776	2-149, 2-153
78777	2-149, 2-153
78779	2-151, 2-155
78780	2-151, 2-155
78781	2-151, 2-155
78785	2-137, 2-139
78787	2-27
78808	3-28
78810	2-151, 2-155
78811	2-149, 2-153
78820	2-151, 2-155
78821	2-151, 2-155
78829	4-37, 4-39, 4-41
78830	4-37, 4-41
78833	4-37, 4-39, 4-41
78836	4-37, 4-39, 4-41
78838	4-37, 4-41
78839	4-37, 4-39, 4-41
78840	2-197, 4-37, 4-39, 4-41
78841	4-37, 4-39, 4-41
78842	4-37, 4-39, 4-41
78843	4-37, 4-39, 4-41
78845	2-79, 2-81
78855	2-13
78875	4-43
78886	2-31
78887	2-31
78897	2-53
78898	2-157, 2-159
78904	3-33
78906	2-19
78907	2-19
78928	2-111
78935	3-9
78936	2-19
78937	2-95, 2-97
78942	3-38
78944	2-167
78979	2-189
78981	3-22
78983	3-38
78985	3-24
78987	3-25
79217	2-189
79219	2-189
79273-1	2-207
79320	2-201
79376	2-171
79380	2-213, 2-215, 2-217
79381	2-121, 2-123, 2-125, 2-127
79397	3-18
79399	2-35
79425	2-25
79447	2-187
79497	3-3
79628	5-9, 6-9
79629	5-9, 6-9
79630	5-9, 6-9
79631	5-9, 6-9
79632	5-9, 6-9
79633	5-9, 6-9
79634	5-9, 6-9
79635	5-9, 6-9
79636	5-9, 6-9
79638	5-9, 6-9
79640	5-9, 6-9
79710	4-42
79711	4-29, 4-31, 4-33, 4-35
79713	4-42
79714	4-42
79715	4-42
79716	4-29, 4-31, 4-33, 4-35
79718	4-31, 4-33, 4-35
79719	4-29, 4-31
79721	4-31
79722	4-31, 4-33, 4-35
79723	4-31, 4-33, 4-35
79724	4-31
79725	4-31
79726	4-31, 4-33, 4-35
79727	4-31, 4-33, 4-35
79728	4-29, 4-31, 4-33, 4-35
79731	4-29, 4-33, 4-35
79732	4-29
79733	4-29
79735	4-33, 4-35
79736	4-33
79737	4-33, 4-35
79738	4-31, 4-33, 4-35
79740	4-29, 4-31, 4-33, 4-35
79770	2-141, 4-25
79828	4-3, 4-5
79956	5-9, 6-9
79957	5-9, 6-9
79960	5-9, 6-9
79961	5-9, 6-9
79962	5-9, 6-9
79963	5-9, 6-9
79964	5-9, 6-9
79965	5-9, 6-9
79966	5-9, 6-9
79967	5-9, 6-9
79969	5-9, 6-9
79970	5-9, 6-9
79972	5-15, 6-15
79973	5-15, 6-15
79974	5-15, 6-15
79975	5-23, 6-23
79976	5-15, 6-15
80950	2-115
81952	2-189

Part Number	Page Number
82063	3-11, 3-15
82196	3-37
82200	3-13, 3-17
82229	2-29
82475	2-25
82483	2-21
82544	2-97
82731	2-35
82739	2-33
82802	2-175
82814	2-151, 2-155
82817	2-149, 2-153
82825	2-161, 2-173, 2-177, 2-179, 2-187
82826	2-151
82832	2-131, 2-169
82833	2-177
82839	2-7, 2-137, 2-139
82844	2-149, 2-153
83563	2-87, 2-89
83564	2-181, 2-183
83565	2-181, 2-183
83568	2-181
83569	2-183
83572	2-35
83575	2-113
83578	2-53, 2-63, 2-65
83580	2-53, 2-63, 2-65
83581	2-35, 2-45, 2-47
83587	2-61
83630	2-191, 2-193
83639	2-53
83640	2-61
83649	2-35
83662	2-37
83664	2-35
83669	5-17, 6-17
83670	2-37
83673	2-37
83676	5-24
83677	5-24, 6-24
83682	2-53, 2-61
83683	2-53, 2-61
83684	2-53, 2-61
83685	2-53, 2-61
83686	2-53, 2-61
83689	2-37
83690	2-121
83692	2-3, 2-35, 2-3
83703	2-137, 2-139
83707	5-24
83721	2-257, 2-265, 2-278
83723	2-257
83724	2-199
83725	2-7
83729	2-35
83731	2-35
83732	5-24, 6-24
83733	2-187
83740	2-111
83746	2-121
83749	2-187
83750	2-35
83753	2-111
83756	2-187
83768	2-35
83772	2-13
83775	2-17
83778	2-17
83780	2-187
83781	2-187
83784	2-111, 2-113, 2-115
83794	2-189
83798	3-3
83799	3-3
83800	2-189
83801	2-189
83804	2-189
83806	3-3
83807	3-3
83809	2-189
83810	2-189
83811	2-199
83812	2-199
83816	2-15
83822	2-13, 3-40
83827	2-15
83839	2-15
83841	2-95, 2-97, 2-99, 2-101
83842	2-13
83843	2-15
83844	2-111, 2-113, 2-115
83845	2-111
83847	2-199
83853	2-35
83856	2-15
83870	2-167
83872	2-197
83873	2-15
83874	2-189
83879	2-137, 2-139
83887	2-137, 2-139
83892	2-137, 2-139
83894	2-137, 2-139
83897	2-137, 2-139
83898	3-20
83979	2-17
83987	2-213, 2-215
83989	2-137, 2-139
83992	2-189
84006	2-63
84007	3-26
84008	4-14
84009	2-31, 4-14
84010	2-179, 4-33
84011	2-29, 4-29
84012	2-161, 4-31
84018	2-15, 3-20, 3-21, 3-28
84021	2-171
84027	2-288
84029	2-173
84030	2-111, 2-113, 2-115
84035	2-15
84036	2-137, 2-139
84037	2-17
84038	2-17
84039	2-13
84040	2-13
84041	2-13
84042	2-31
84048	2-13
84049	2-13
84050	2-13
84052	2-221
84053	2-223
84054	2-95, 2-97
84055	2-95
84056	2-191
84057	2-191
84061	2-221
84062	2-223
84065	2-15
84067	2-171
84071	3-28
84073	3-19
84076	3-21
84078	3-44
84079	2-3, 2-3
84080	2-3, 2-3
84084	3-7
84086	2-17
84087	2-79
84092	2-183
84093	2-181
84095	2-191, 2-193, 2-195
84097	2-157, 2-159
84098	2-13
84100	2-17
84101	2-95, 2-97
84102	2-137, 2-139
84103	2-137, 2-139
84110	2-191, 2-193
84112	3-40
84116	2-183
84118	2-181
84119	2-191
84121	2-191, 2-193
84122	2-149
84123	2-121
84127	2-113, 2-115
84128	2-113
84129	2-115
84132	2-113, 2-115
84134	2-113, 2-115
84136	2-113, 2-115
84140	2-191
84141	2-221
84145	2-149
84146	2-149

Part Number	Page Number
84147	2-149, 2-153
84148	2-151
84169	2-121, 2-123, 2-125, 2-127
84170	2-137, 2-139
84581	2-165
84593	2-189
84596	2-131
84597	2-131
84659	5-17, 6-17
84875	5-3
84876	5-3
84877	5-3
84878	5-3, 6-3
84879	5-3, 6-3
84880	5-3, 6-3
84882	5-3, 5-24, 6-3, 6-24
84883	5-3, 6-3
84884	5-3, 6-3
84885	5-5
84886	5-5
84887	5-5, 6-5
84888	5-5
84889	5-5, 5-11, 6-5, 6-11
84891	5-5, 6-5
84892	5-5
84893	5-5
84894	5-5
84895	5-7, 6-7
84896	5-7, 6-5, 6-7
84897	5-7, 6-7
84898	5-7, 6-7
84899	5-7, 6-7
84900	5-7, 6-7
84901	5-7, 6-7
84902	5-7, 6-7
84903	5-7, 6-7
84904	5-7, 6-7
84905	5-7, 6-7
84906	5-7, 6-7
84907	5-6, 6-6
84910	5-6, 6-6
84911	5-22
84912	5-22
84913	5-22
84914	5-22
84915	5-19, 6-19
84916	5-19, 6-19
84917	5-19, 6-19
84919	5-19, 6-19
84921	5-19, 6-19
84923	5-13
84924	5-13, 6-13
84925	5-13, 6-13
84926	5-13, 6-13
84927	5-13, 6-13
84928	5-13
84929	5-13
84930	5-13
84931	5-13
84932	5-13
84933	5-13
84934	5-13
84935	5-13
84936	2-3, 2-3, 5-19, 6-19
84937	5-13
84938	5-13
84940	5-13
84941	5-13
84942	5-13
84943	5-13
84944	5-13
84946	5-13
84947	5-13
84950	5-21, 6-21
84951	5-21, 6-21
84952	5-21, 6-21
84953	5-21, 6-21
84954	5-21, 6-21
84955	5-21, 6-21
84956	5-21, 6-21
84957	5-21, 6-21
84958	5-21, 6-5, 6-21
84961	5-21, 6-21
84962	5-3, 6-3
84963	5-11, 6-11
84964	5-11, 6-11
84965	5-11, 6-11
84966	5-11, 6-11
84967	5-11, 6-11
84968	5-11
84969	5-11, 6-11
84970	5-11, 6-11
84971	5-11, 6-11
84972	5-11
84973	5-11, 6-11
84974	5-11, 6-11
84975	5-11, 6-11
84976	5-11, 6-11
84977	5-11, 6-11
84978	5-11, 5-19, 6-11, 6-19
84979	5-11, 6-11
84980	5-11
84981	5-11, 6-11
84982	5-23, 6-23
84983	5-5, 5-23, 6-5, 6-23
84984	5-23, 6-23
84985	5-15, 6-15
84987	5-23, 6-23
84988	5-23, 6-23
84989	5-23, 6-23
84990	5-15, 6-15
84991	5-15, 6-5, 6-15
84992	5-15, 6-15
84993	5-23, 6-23
84994	5-23, 6-23
84995	5-15, 6-15
84996	5-15, 6-15
84997	5-15, 6-15
84998	5-23, 6-23
84999	5-9, 6-9
85390	3-44
86041	2-35
86240	2-133, 2-187
86328	2-29, 2-97, 2-157, 2-159
86330	3-11, 3-13
86332	3-9
86508	3-3
86591	2-197, 2-199
86636	2-199, 3-7
86755	2-197
86759	2-181, 2-183
86824	2-55, 2-57, 2-191, 2-193, 2-195, 3-3
86860	2-181, 2-183, 3-35
86865	2-183
86866	2-181, 2-183, 2-187
86952	2-173, 2-175, 2-177
87299	2-31
87396	2-95, 2-97, 2-99, 2-101
87536AM	2-221
87631	2-169
87651	2-151, 2-155
87652	2-151, 2-155
87677	2-173, 2-177
87681	2-149, 2-153
87816	2-181, 2-183
87833	2-69
87866	2-221
87948	3-9
9000355	2-101
9000595	2-13
9000596	2-125
9000610	2-99
9000681	2-157, 2-159
9000823	4-45
9000845	3-15, 3-17
9000846	3-11, 3-13
9000879	3-11, 3-13, 3-15, 3-17
9001064	2-117, 2-119
9001245	2-9
9001246	2-11
9002675	2-157
9002708	4-41
9002709	4-41
9003054	2-199
9003609	2-101
97031	2-135
97163	2-137, 2-139

PART DESCRIPTION TO PAGE NUMBER CROSS REFERENCE LIST

A

Actuator, 2-53, 2-61
Adapter, Carburetor, Ford 2.3, 2-61
Adapter, Fuelline, 2-99
Adapter, Throttle Body, 2-71
Adapter, Valve, 400mm [Bosch], 2-75
Adaptor, Carburetor, 2-53
Adaptor, Elbow, Carburetor, 2-53
Adaptor, Filter, Remote, 2-51
Adaptor, Intake, Lpg [3.0l], 2-71
Adaptor, Valve, Fuel Trim, 2-71
Adaptor, Water Pump Machined, 2-35
Air Cleaner, 2-79, 2-81
Alarm Kit, Backup, 3-19
Alternator, 12vdc, 075a [Valeo], 2-45, 2-47, 2-49
Alternator, 2-35
Angle Wldt, Panel, 2-15
Angle, Battery, 2-129
Angle, Cable Keeper, 2-163, 2-167
Angle, Filler Plate, 3-31
Angle, Heat, Shield, 2-47
Angle, Hopper, 2-21
Angle, Retainer, Spring, 2-163, 2-173, 2-175, 2-177
Angle, Stiffener, Tray, Filter, 2-25
Angle, Stop, LP Strap, 2-103, 2-105
Angle, Stop, Lp Strap, 2-107, 2-109
Angle, Stop, 3-33
Angle, 2-63
Arm Assy, Lift, Lh W/Label, 2-19
Arm Assy, Lift, Rh W/Label, 2-19
Arm Assy, Safety W/Label, 2-19
Arm Kit, 7-3
Arm Wldt, Bottom, 2-185
Arm Wldt, Brush, Drive, 2-169
Arm Wldt, Idlerr, W/Brush, 2-169
Arm Wldt, Propel 8410, 2-137, 2-139
Arm Wldt, Support, Sqge,Lh, 2-173
Arm Wldt, Support, Squeegee,Rh, 2-177
Arm Wldt, Top, Lh, 2-185
Arm Wldt, Top, Rh, 2-185
Arm Wldt, 3-35
Arm.Thr.Ball, 5-9, 6-9
Arm, Adjmt, Alternator, 2-49
Arm, Alternator, 2-45, 2-47
Arm, Lift, 2-165
Arm, Propel, Lower 8410, 2-137, 2-139
Arm, Squeegee Lift Front, 2-181, 2-183
Arm, Squeegee Lift Rear, 2-181, 2-183
Arm, 2-35, 2-185
Armature, 5-9, 6-9
Armrest Assy, Rh, 3-22
Armrest, Molded, 2-13

B

Backflush,Cover Lid, 4-39
Backplate Assy, 4-23, 4-25
Backplate S/A Ce, 4-21
Baffle, 5-3, 6-3
Balancer, 7-11
Ball Cl, 4-17
Ball Joint, 250-28, 2-137, 2-139
Ball, .313 Dia. Cp, 4-31, 4-33, 4-35
Ball, 4-3, 4-5, 7-3
Balljoint, Rod End 5/8-18, 2-185
Balljoint, Rod End, 2-131
Bar, Adjustment, Pivot, 2-171
Bar, Link, 2-27
Bar, Rnd Plstc .375D 14.62L, 2-199
Bar, Rnd Plstc .375D 14.62, 2-199
Bar,Shaker Spring, 2-25
Bar,Shaker, 2-25
Bar-Flt .06T 1.00W 4.00L,Rbr, 2-25
Bar-Flt .06T 4.00W 5.00L,Rbr, 2-25
Battery, 12V, Cc Amps:475 Wet, 2-129
Bearing Assy, 4-19
Bearing Cam,, 5-6, 6-6
Bearing Cam, 4-23, 4-25
Bearing Ce, 4-21
Bearing Cl, 4-17
Bearing Kit, .001 U.S., 7-7
Bearing Kit, .001" #1, 2, 3, 4, 7-11
Bearing Kit, .001" #5, 7-11
Bearing Kit, .010" #1, 2, 3, 4, 7-11
Bearing Kit, .020" #1, 2, 3, 4, 7-11
Bearing Kit, .025" #5, 7-11
Bearing Kit, .030" #1, 2, 3, 4, 7-11
Bearing Kit, Cshft [Fd], 6-13
Bearing Kit, Std #1, 2, 3, 4, 7-11
Bearing Kit, Std #5, 7-11
Bearing Kit, Std, 7-7
Bearing Kit, 7-7, 7-12
Bearing Race, 4-21
Bearing Thrust, 4-7, 4-9
Bearing, .016 Camshaft, 5-6, 6-6
Bearing, .625B X .38, 2-181, 2-183
Bearing, 1.00 Dia X .38 L, 2-187
Bearing, Ball, 2-35
Bearing, Brake, 2-135
Bearing, Cone, 1.38b 0.71w, 2-133
Bearing, Cone, Pump, Hyd, 4-27
Bearing, Cup, 2.56d 0.55w, 2-133
Bearing, Cup, 2.56Dia 0.55W, 3-41, 3-42, 3-43
Bearing, Cup, 4-27
Bearing, Flange .500B, 2-219
Bearing, Flange .625B X .50, 2-181, 2-183
Bearing, Flange, .750 Bore, 2-171, 2-185
Bearing, Flange, 1.00 Bore, 2-185
Bearing, Flange, 2-187
Bearing, Pillowblock, 1.02b [Solid Pye], 2-133
Bearing, Self Align, Sealed, 2-19
Bearing, Thrust .500, 2-181, 2-183, 3-35
Bearing, Thrust, Pump, Hyd, 4-27
Bearing, Thrust, 2-189, 4-23, 4-25
Bearing&Clr ,1.25B 2.44D 1.41W, 2-169
Bearing-Ball,1.38B 2.83D 0.67W, 2-169
Bearing-Cone, 1.38Bore 0.71Wth, 2-131
Bearing-Cup , 2.56Dia 0.55Wth, 2-131
Bearing-Flange,2 Hole .625Bore, 2-27
Bearing-Flange,2 Hole 0.50Bore, 2-219
Bearing-Self Align 1.250 Bore, 2-27
Bearing, 4-21, 5-9, 5-22, 6-9, 6-22
Bellcrank Kit, Lower, 2-187
Bellcrank Kit, Upper, 2-187
Bellows Kit Gr, 4-43
Bellows, .75 Id 10.3L, 2-199, 3-3
Belt, Timing, Cam Fd, 2-3, 2-3
Belt, V, [3v] 39.6l [Hc41], 2-49
Belt, V, [3v] 40.0l, 1only [Hc38], 2-45, 2-47
Belt, V, 46.4l, Cogged [Hc38], 2-3, 2-3
Belt, V, 2-35
Blade Assy, Squeegee, Side, Rh, 2-181, 2-183
Blade, Deflector, 2-7
Blade, Squeegee, 2-189
Block Assy, 5-3, 6-3
Block, Mtg, Spacer, Plstc, 2-179
Bolt (1/4-20x.62), 7-9
Bolt (5/16-18x5/8), 7-9
Bolt (1/4-20x1/12 Hex), 7-12
Bolt (1/4-20x1/12), 7-12
Bolt (1/4-20x1/2), 7-9
Bolt (5/16-18x1.5 Hex), 7-12
Bolt Cl, 4-3
Bolt M12, 5-3, 5-6, 6-3, 6-6
Bolt M12X45, 5-19, 6-19
Bolt, Carrm 8X1.25, 2-7
Bolt, Clutch, 2-39, 2-41, 2-43
Bolt, Eye, Lift, 2-41
Bolt, M6X16.5mm, 5-3, 6-3
Bolt, M8 X 17 Schd, 5-7, 6-7
Bolt, M8X12.0mm, 5-23, 6-23
Bolt, Starter, 2-39, 2-41, 2-43
Bolt,Hold Down,Battery, 7.5 Lg, 2-129
Bolt,M10X40.0mm, 5-11, 6-11
Bolt,M10X55.0M, 5-15, 6-15
Bolt,M10X58.0mm, 6-17
Bolt,M14X55.0M, 5-13, 6-13
Bolt,M5X20.0M, 5-11, 6-11
Bolt,M6X27.5mm, 5-11, 6-11
Bolt,M6X37.5mm, 5-7, 6-7
Bolt,M6X47.5mm, 5-11, 6-11
Bolt,M6X52.5mm, 5-11, 6-11
Bolt,M8X18.0M, 5-23, 6-23
Bolt,M8X20.0mm, 5-11, 6-11
Bolt,M8X25.0mm, 5-15, 6-15
Bolt,M8X53.0mm, 5-23, 6-23
Bolt,Tens.Sprn, 5-19, 6-19
Bolt-Conrod-4, 5-22, 6-22
Bolt-Eye, .25-20Th .25B 1.4L, 2-173, 2-175, 2-177, 2-181
Bolt-Eye, .25-20Zinc.56D 2.00L, 2-21
Bolt-Eye, .31-18Th.18B 2.75L, 2-167
Bolt-Eye, M 8X1.25 .328 1.18L, 2-185
Bolt-Thru, 5-9, 6-9
Bolt, 2-55, 2-57, 2-69, 2-71, 2-72, 2-189, 4-3, 4-5, 4-19, 5-17, 5-19, 6-19, 7-3, 7-5, 7-7, 7-9, 7-11, 7-12

Boot, Circuit Breaker, 3-19
Boot, Dome, .72id .72l, Clear, 3-11, 3-13, 3-15, 3-17
Boot, Str 0.42id .12h 0.25l, 2-45, 2-47, 2-49
Boot, Switch, Ignition, 2-221
Boot, Switch, 2-221
Boot,Batt.Term. 1-2Ga. Red, 2-129
Boot,Batt.Term.1-2Ga. Black, 2-129
Boot,Circuit Breaker, 2-225, 3-7
Boot, 2-35
Bracket [Epr], 2-75
Bracket Assy, Lpg Tank W/Label, 2-103, 2-105, 3-38
Bracket Assy, Tank, W/ Label, Lpg, 2-107, 2-109
Bracket Kit, Door Hinge, Ci, Lh, 2-9
Bracket Kit, Door Hinge, Ci, Rh, 2-11
Bracket Kit, Spring, Replmt, 2-23
Bracket Tie Down, 3-37
Bracket Wldt, Air Filter 2.5, 2-35
Bracket Wldt, Eng/Alt Mount, 2-37
Bracket Wldt, Fltr, Hyd, 2-125, 2-127
Bracket Wldt, Mtg, Eng, Rear, 2-39, 2-41, 2-43
Bracket Wldt, Mtg, Fltr, Air, [Gm3.0], 2-81
Bracket Wldt, Mtg, Valve, 2-161
Bracket Wldt, Pump [8400 Fast], 2-205
Bracket Wldt, Spring, Gas, Hppr Cover, 2-23
Bracket Wldt, Steering, Tilt, 2-219
Bracket Wldt, 2-121, 2-123
Bracket, Bottom, 7-5
Bracket, Retainer, 2-137, 2-139
Bracket, Adjustment, Sidebrush, 2-163
Bracket, Alarm Backup, 3-19
Bracket, Alternator Mounting, 2-35
Bracket, Alternator, 2-45, 2-47, 2-49
Bracket, Angle, Keeper, Cable, 2-133
Bracket, Angle, 3-3
Bracket, Box, Relay, 2-59, 2-75
Bracket, Brush Lift Adj M10, 2-167
Bracket, Cable Clip, 2-187
Bracket, Clamp, 3-3
Bracket, Detergent Tank, 3-7
Bracket, Eng/Alt Mount, 2-37
Bracket, Fan, 2-213, 2-215, 2-217
Bracket, Filter, Fuel, 2-97
Bracket, Filter, 2-25
Bracket, Flap, Recirculation, 2-7
Bracket, Flasher, 3-9, 3-19
Bracket, Fltr, Fuel [8410 2007], 2-101
Bracket, Fltr, Fuel, 2-99
Bracket, Fltr, Lpg [8410], 2-69
Bracket, Guard, Alternator, Hd [Gm3.0l], 2-49
Bracket, Gusset, Corner, Lh, 2-23
Bracket, Gusset, Corner, Rh, 2-23
Bracket, Gusset, Rear, 2-187
Bracket, Hose, Clamp Down, 2-7
Bracket, Hose, 2-169
Bracket, L, 2-223
Bracket, Light, Sbdc, 3-9
Bracket, Metering Pump, 3-7
Bracket, Motor, 2-165, 2-173, 2-175, 2-177
Bracket, Mounting Motor, 2-213, 2-215, 2-217
Bracket, Mounting, Flow Switch, 2-141
Bracket, Mounting, Manifold Wa, 2-191
Bracket, Mounting, Seat Kit, 3-23
Bracket, Mounting, Seat, 3-23
Bracket, Mounting, 3-18
Bracket, Mtg, Eng, Front, Rh, 2-39, 2-41
Bracket, Mtg, Eng, Lh, 2-39, 2-41, 2-43
Bracket, Mtg, Eng, Rear, Lh, 2-39, 2-41, 2-43
Bracket, Mtg, Eng, Rh [8410], 2-43
Bracket, Mtg, Engine Front Rh, 2-37
Bracket, Mtg, Fan, 2-217
Bracket, Mtg, Gas Spring, 2-15
Bracket, Mtg, Hinge, Lh, 2-9
Bracket, Mtg, Hinge, Rh, 2-11
Bracket, Mtg, Hyd Valve, 2-143
Bracket, Mtg, Light, Ohg, 3-11, 3-13
Bracket, Mtg, Manifold, Soltn, 2-193
Bracket, Mtg, Manifold, Water, 2-193, 2-195
Bracket, Mtg, Motor, 2-31
Bracket, MTG, Radiator Tube, 2-121
Bracket, Mtg, Radiator, Tube, Upper, 2-123
Bracket, Mtg, Regulator/Lockoff, 2-65
Bracket, Mtg, Sol Valve [8400], 2-203
Bracket, Mtg, Tank, Lpg, 2-107, 2-109
Bracket, Mtg, Vac Fan 2.5 Ford, 2-213
Bracket, Mtg, Vacfan, 2-215
Bracket, Mtg, Valve, Soltn, 2-193, 2-195
Bracket, Pivot, Sq Lift Lh, 2-183
Bracket, Pivot, Sq Lift Rh, 2-181
Bracket, Plt, Hyd Valve, Adj, 2-159
Bracket, Propel Adj. Guide, 2-137, 2-139
Bracket, Retainer, Spring, 2-4, 2-5
Bracket, Safety Clip, 2-137, 2-139
Bracket, Sbdc, 3-33
Bracket, Shock, 2-137, 2-139
Bracket, Side Brush, 2-163
Bracket, Solenoid Valve, 4-39
Bracket, Spring, 2-187
Bracket, Starter, 2-39, 2-41, 2-43
Bracket, Support, Cable, 2-183
Bracket, Support, Cylinder, 2-163
Bracket, Support, Pulley, 2-163
Bracket, Support, 2-111, 2-117, 2-119, 2-135
Bracket, Switch, 3-9
Bracket, Top, 7-5
Bracket, Tray, Drip, 2-51
Bracket, Wldt, Light, Rotating, 3-15, 3-17
Bracket, Wldt, Propel Adj., 2-137, 2-139
Bracket,Rear Tiedown, 3-37
Bracket, 2-25, 2-35, 2-37, 2-53, 2-61, 2-103, 2-105, 2-121, 2-201, 3-9, 7-3, 7-9
Brake Assy, Drum, Mech, 07.9d [6600]], 2-133
Brake Kit, Repair, 2-133
Breaker-Circuit 10 Resetable, 2-225
Breaker-Circuit, 15A Resetable, 2-225, 3-7, 3-19
Breather Cap, 5-21, 6-21
Breather, Hyd Cap 40Mic 8.5Ds, 2-157, 2-159
Brg-Conn.Rod, 5-22
Brush Assy, Disk, Scb, 16.0 D, Bassine 500, 2-5
Brush Assy, Disk, Scb, 16.0 D, H.D. Polypropylene, 2-4
Brush Assy, Disk, Scb, 16.0 D, Soft Nylon, 2-5
Brush Assy, Disk, Scb, 16.0d, Polypropylene, 2-5
Brush Assy, Disk, Scb, 16.0d, Super Abrasive, 2-5
Brush Holder, 5-9, 6-9
Brush Kit, 4-37
Brush, Disk, Swp, Flat Wire, 2-5
Brush, Disk, Swp, Nylon, 2-5
Brush, Disk, Swp, Polypropylene, 2-5
Brush, Swp, 45l, Wedge, Polypropylene, 2-5
Brush, Swp, 45l, Wndw, Polypropylene, 2-5
Brush, Swp, Nylon, 2-5
Brush, Swp, Patrol, Nylon, 2-5
Brush, Swp, Polypropylene & Wire, 2-5
Brush, Swp, Polypropylene, 2-5
Brush, Swp, Union mix Wire, 2-5
Brush, Swp, Wire, 2-5
Bshg,Flange,0.50Bx0.62Odx0.40L, 3-33
Bshg,Sleeve,0.37Bx0.50Odx0.50L, 2-135
Bulb GE, 3-18
Bulb, 12V .1A 01Cp #53, 3-9
Bulb, 12V .27A 2Cp #194, 3-9
Bulb, 12V .9A 15, 3-19
Bulb, 12V .5A, 2-13
Bumper Wldt, Front, 2-23
Bumper, Rubber, 2-15, 3-28
Bumper, Squeegee, 2-189
Bumper,Rbr,W.Knurled Stud, 3-35
Bushing, Flanged, .625 Id, 2-173, 2-175, 2-177
Bushing, Flng, 0.32b 0.50d 0.24l, Bnz, 2-115
Bushing, Sleeve, 0.50b 0.59d 0.38l, St, 2-183
Bushing, Sleeve, 0.50b 0.59d 0.38l, Stl, 2-181
Bushing, Spanner, 2-189
Button, Pivot Ce, 4-21
Button, Plug, 2.00h .04-.19 [Chm Stl], 2-13
Button, Plug, Switch, 1.45 X 0.83 Hole, 2-211

C

Cable, Adj, Main Brush, 2-167
Cable, Batt. Term. 1-2Ga. Red, 2-129
Cable, Brushlift, 2-167
Cable, Choke, 2-53

Cable, Lift, Side Brush, 2-163
Cable, Push/Pull, 2-183
Cable, Ss .19d 082.1l .4clevis /.4clevis, 2-133
Cable, 2-171, 2-187
Cabletie Mount, Adhesive, 3-19
Cam, 2-189
Camplate Ce, 4-21
Camplate, 4-23, 4-25
Camsft.Sensor, 5-11
Camshaft, 5-19, 6-19, 7-12
Camshft Sprckt, 5-19, 6-19
Canoe Clip, 2-13
Cap Assy, Pos Drain, 3-29, 3-30
Cap Assy, Tank, Drain, 4-41
Cap Assy, Tank, 4-37
Cap Drain, 2-201
Cap Radiator, 2-111, 2-113
Cap Tank, 2-199, 2-201, 3-7
Cap, Breather, Hyd, 8.5 Ds, 2-3, 2-3
Cap, Distributor, 7-5
Cap, Drain Hose, 2-201
Cap, Drain, 3-29, 3-30
Cap, End Cl, 4-17
Cap, Fill, Oil, 7-3
Cap, Fuel, Tank, 2-101
Cap, Fuel, 2-95, 2-97
Cap, Hub, Dust 2.57d 0.77l, 2-133
Cap, Neoprene, Black, 2-191, 2-193, 2-195
Cap, Plate, 2-197
Cap, Radiator, 15psi, [Stant #a02502], 2-115
Cap, Screw Cl, 4-15
Cap, Screw, 4-11, 4-15
Cap, Tank, Fuel, 2.3neck 2.6d, 2-99
Cap, Tank, Overlfow, 2-111, 2-113, 2-115
Cap, Tank, 4-39
Cap, Valve Spring, 7-3
Cap, Wheel, Steering, 2-219
Cap, 7-12
Carburetor, Gas [F/ LRG-423, Vent, Ze], 2-53
Carburetor, Gas [F/ LRG-425, Vent, Ze], 2-53
Carburetor, Lpg, With Gasket, 2-61
Cart.Psi Ct Cp, 4-33, 4-35
Cart, Check Vlv Cp, 4-31
Cart, Check Vlv, 4-42
Cart, Psi Control, 4-33, 4-35
Cart,Logic Cntl Cp, 4-31, 4-33, 4-35
Cart,Pilot Cntr Cp, 4-31
Cartridge, Solenoid Valve, 4-14
Case, Replmt Kit, 2-221
Chain, Link#2/0, 5 Links Plain, 2-7
Channel Wldt, 3-35
Channel, Mounting, Radiator, 2-111, 2-113, 2-115
Channel, Mounting, Steering La, 2-219
Channel, Mtg, Fan Motor, 2-117, 2-119
Channel, Retainer, Seal, Rear, 2-7
Check Valve Kit, 4-37, 4-39
Circuit Board Rplt Kit F/83716, 2-223
Circuit Board Rpmt Kit F/83709, 2-221
Circuitbreaker, 15.0a [Resetable], 3-11, 3-13, 3-15, 3-17
Clamp Assy, 2-79, 2-81
Clamp Wormdrive, 1.25-2.00, 2-121, 2-123, 2-125, 2-127
Clamp Wormdrive, 3.75-4.62, 2-213, 2-215, 2-217
Clamp, Angle, Hose, 2-31
Clamp, Cable .44D .62Wide, 3-18
Clamp, Cable 1.5 Dia, 2-157, 2-159
Clamp, Cable, Ss, 2.50d X 1.00w, 1hole, 2-127
Clamp, Cable, Stl, 0.25d X 0.56w, 1h, 3-15, 3-17
Clamp, Cable, Stl, 0.38d X 0.38w, 1h, 2-99
Clamp, Cable, Stl, 0.69d X 0.62w, 1h, 2-99, 2-107, 2-109
Clamp, Cable, Stl, 0.69d X 0.62w, 1hole, 2-127
Clamp, Cable, Stl, 0.75d X 0.75w, 1h, 2-203
Clamp, Cable, Stl, 0.9x1.8x0.62w, 1h, 2-193
Clamp, Cable, Stl, 1.00d X 0.62w, 1h, 2-193
Clamp, Cable, Stl, 1.0x2.0x0.62w, 1h, 2-195
Clamp, Cable, Stl, 1.25d X 1.00w, 1h, 2-41, 2-43, 2-143
Clamp, Cable, Stl, 1.50d X 0.75w, 1h, 2-97
Clamp, Cable, Stl, 1.50d X 1.00w, 1h, 2-31, 2-125, 2-195, 2-205
Clamp, Cable, Stl, 2.00d X 0.75w, 1h, 2-99
Clamp, Cable, Stl, 2.00d X 0.75w, 1hole, 2-101
Clamp, Cable, Stl, 2.25d X 1.00w, 1h, 2-97, 2-99
Clamp, Cable, 2-35, 2-37
Clamp, Hose, 1.0, 2-76
Clamp, Hose, Plstc .351-.394 Id, 2-205
Clamp, Hose, Spring Stl, 0.86d X 0.38w, 2-83, 2-85
Clamp, Hose, Spring, 0.62d, 2-76
Clamp, Hose, Wormdrive, 0.25-0.62d, .31w, 2-101, 2-127
Clamp, Hose, Wormdrive, 0.25-0.62d, 2-99
Clamp, Hose, Wormdrive, 0.31-0.88d, .31w, 2-203, 2-205, 2-207
Clamp, Hose, Wormdrive, 0.31-0.88d, 2-99
Clamp, Hose, Wormdrive, 0.50-1.06d, 2-55, 2-57
Clamp, Hose, Wormdrive, 0.56-1.06d, .56w, 2-75
Clamp, Hose, Wormdrive, 0.56-1.06d, 2-65, 2-71, 2-81
Clamp, Hose, Wormdrive, 0.81-1.50d, .56w, 2-195
Clamp, Hose, Wormdrive, 0.81-1.50d, 2-51, 2-55, 2-67, 2-69
Clamp, Hose, Wormdrive, 1.56-2.50d, .50w, 2-125, 2-127
Clamp, Hose, Wormdrive, 1.81-2.75d, 2-83, 2-85
Clamp, Hose, Wormdrive, 5-3, 6-3
Clamp, Hose, 2-161, 2-165, 2-201, 3-5
Clamp, Loop, 3.0 I.D., 2-15
Clamp, Mtg, Filter, Air, 2-83, 2-85
Clamp, Mtg, Tank, 2-197
Clamp, Wormdrive, 2-53
Clamp,Cable .44D .62Wide, 3-9
Clamp,Cable 1.25Dia 1.00W Neo, 2-225
Clamp,Mounting,Cyclopac Aircl., 2-79, 2-81
Clamp-Cable 1.50D 1.00W STL, 2-29
Clamp-Cable 3.00D 1.00W Stl (Diesel only), 2-199
Clamp-Cable, 0.25D 0.56W Stl, 2-25
Clamp-Cable, 0.25Dia 0.56Wth, 2-33
Clamp-Cable, 0.38Dia 0.38Wth, 2-95, 2-97
Clamp-Cable, 0.38Dia 0.62Wth, 2-95
Clamp-Cable, 1.00Dia. .62Wth, 2-129
Clamp-Cable,.69Dia. 62Wth, 2-103, 2-105, 2-191, 2-193, 2-195
Clamp-Cable, 2-19
Clamp-Conduit, 1 Hole 0.50Dia, 2-183
Clamp-Muffler,For 1.62 Od Tube, 2-87, 2-89
Clamp-Tube 2 Hole, 2-121, 2-123, 2-125, 2-127
Clamp-Wormdrive 0.50-1.06D, 2-191, 2-193, 2-195, 3-3
Clamp-Wormdrive, 0.25- 0.62D, 2-61, 2-95, 2-97, 2-191, 2-193, 2-195, 3-7
Clamp-Wormdrive, 0.25-0.62D, 2-113, 2-115
Clamp-Wormdrive, 0.31- 0.88D, 2-191, 2-193, 2-195
Clamp-Wormdrive, 0.56- 1.06D, 2-63
Clamp-Wormdrive, 1.81- 2.75D, 2-79, 2-81
Clamp-Wormdrive, 3.56-4.50D, 2-199
Clamp, 2-55, 2-57, 2-67, 2-69, 2-72, 7-5, 7-12
Clevis, Adj, 0.38pin, M12x1.75, 2-133
Clip, Christmas Tree, 2-17
Clip, Safety, Gasspring, 2-23
Clip-Finger Grip, 3-28
Clip, 2-35
Coil, 12V, 4-29, 4-31, 4-33, 4-35
Coil, 4-14, 7-5
Collar, Locking, Plated, 2-27
Collar, Spring Ce, 4-21
Column, Pump, Water, 4-41
Column, Pump, 4-37
Column, Steering #2 10Lg Wire, 2-219
Column, 4-39
Compensator Ce, 4-21
Compensator, Psi And Flow, 4-19
Conn Rod, 7-7
Connecting Rd, 5-22, 6-22
Connector, Fuel, E90, Qf, 2-101
Connector, Fuel, Qf, 2-99, 2-101

Control Unit, Gov (Replaced by 374127), 2-53, 2-61
Control, Electonic, Gas, 4-49
Control, Gov. 1475,2000,2600 E (Replaced by 374127), 2-53, 2-61
Controller, Lpg, 12vdc, 2-65
Converter, Lpg, 2-71
Cooler, Hyd 25Gpm 400Btu 0500, 2-111
Cooler, Hydraulic, 2-113, 2-115
Cord, Sponge, 2-3, 2-21, 2-3
Coupler, Female X Hose Shank, 3-29, 3-30
Coupler, 2-141
Coupling, Flywheel, 2-37
Coupling, Hose, 2-121
Coupling, 4-19
Couplng, Quick Disc. Shwd, 2-103, 2-105
Cover Assy, End, 4-27
Cover Assy, Hppr, 2-23
Cover Ce, 4-21
Cover Lid, 2-199, 3-7
Cover Wldt, Battery W/Tread, 2-13
Cover Wldt, Engine, Top, 2-15
Cover, Brush Press Linkage, 3-40
Cover, Cleanout, 2-201
Cover, End, 4-19
Cover, Hose, 2-76
Cover, Insert, 2-201
Cover, Instr, Panel [8400], 2-205
Cover, Linkage, Brush Pressure, Ce, 2-13
Cover, Lintel 8410 W/Fasteners, 2-17
Cover, Motor, 3-5
Cover, O-Ring, 4-23, 4-25
Cover, Oil Pump, 2-35
Cover, Rocker Switch Seal, 2-191, 2-193, 2-195
Cover, Sbdc, 3-33
Cover, Tank, Recovery Es, 2-199
Cover, Tank, Recovery W/Label, 2-199
Cover, Trunion, 4-23, 4-25
Cover, 2-35, 4-19, 4-21, 4-23, 4-25, 7-3, 7-7, 7-9, 7-11
Crank Replmt.Kit,Pump F/79323, 4-43
Crankshaft Asy, 5-13, 6-13
Crankshaft, 7-11
Crnksft Seal-Rear, 5-13, 6-13
Crnksft Sprckt, 5-13, 6-13
Crnkshaft Key, 5-13, 6-13
Cup Assy, 2-79, 2-81
Cushion, Piston, 4-42
Cyl Block Assy (Short Block Assy), 5-3, 6-3
Cylinder, Hyd 1.5B 02.8S .2500, 2-187
Cylinder, Hyd 1.5B 02.8S.2500, 2-163
Cylinder, Hyd 2.0B 12.0S 2500, 2-19
Cylinder, Hyd, 2.0b 15.0l 08.00strk 1500, 2-131
Cylinder, Hyd, 2-173, 2-175, 2-177
Cylinder-Hyd2.0X4.0Da2500Psi, 2-27, 2-167, 2-171

D

Detergent Pkg, 4 Liter, Sgl [Tco 665], 2-3, 2-205, 2-3
Diode, Ele, Plug, 2-211
Disk Assy, Pad Drive, 16d Rep.By397916, 2-5
Disk, Pad Drive,W/Face,16d Rep.By397976, 2-5
Distributor, 7-5
Door Wldt, Brush, Lh, 2-9
Door Wldt, Brush, Rh, 2-11
Door, Dump, 2-21
Door, Dust, 2-27
Door, Eng, Side, 2-15
Door, Rear, Lpg, Rh, 2-13
Door, Rear, Rh, 2-13
Dowel,Frnt Cover, 5-3, 6-3
Dowel, 5-3, 6-3
Drain Cock,.25Npt Wh#120 Angl, 2-111, 2-113, 2-115
Draincock,End.Block, 5-3, 6-3
Drive Assy, 5-9, 6-9
Drive Cl, 4-11, 4-17
Drive Shaft, 4-19
Drive, 4-3, 4-5, 4-7, 4-9, 4-15
Duct Assy, Vacfan, W/ Seal, 2-31
Duct, Vinyl .40X.75X26.0 .25D, 3-9
Duct, Vyl, 0.40 X 0.75 .25d 06.0l, 3-11, 3-13
Duct, Vyl, 0.40 X 0.75 .25d 10.0l, 3-11, 3-13
Duct, Vyl, 0.40 X 0.75 .25d 19.0l, 3-11, 3-13
Duct, Vyl, 0.40 X 0.75 .25d 24.0l, 2-23
Dust Cont Kit S Br 8400, 3-33

E

Elbow,90 deg, 5-15, 6-15
Element, Filter, 2-3, 2-121, 2-123, 2-125, 2-127, 2-3
Element, Fltr, Air, [Dn#P822858] Safety, 2-83, 2-85
Element, Fltr, Air, [Dn#P831424], 2-83, 2-85
Element, Fltr, Fuel Lpg [Coalescent, 2-69
Element, Fltr, Oil, Eng, Spin-On[Gm], 2-51
Element, Safety, 3-39
End Cap Cl, 4-11
End Cap, 4-7, 4-9
End, Cap, 4-15
Engine Assy, Gas, Clsd Loop [Gm, 3.0l] (See GM Engine Breakdown), 2-41
Engine Assy, Lpg, Clsd Loop [Gm, 3.0l] (See GM Engine Breakdown), 2-41
Engine Purch Kit, Lrg425 (See 2.5L Engine Breakdown), 2-35
Engine, Block, Long [Gm3.0l] (See GM Engine Breakdown), 2-43
Engine, Gm, Gas, Open Loop, (See GM Engine Breakdown), 2-39
Engine, Gm, Lpg, Open Loop, (See GM Engine Breakdown), 2-39
Engine, Partial (Includes block, pistons, rods, crankshaft, bearings, rear seal gasket), 7-7
Exh.Manifold, 5-15, 6-15
Extinguisher Kit Fire 8400/8410, 3-25
Extinguisher, Fire, 3-25
Extrusion,.062 Matl10.10Lg, 2-35

F

Fan, Radiator, 2-117, 2-119
Fan, Repair Kit, Reassembly, 2-213, 2-215, 2-217
Fastener, Southco #62-10-102-30, 2-113, 2-115
Fastener, Velcro 2.0W 2L T400, 2-17
Filter Assy, Air, Molded Ure, 2-205
Filter Assy, Spin-On, 2-121, 2-123, 2-125, 2-127
Filter Element, Air, 2-3, 2-79, 2-81, 2-3
Filter Element, Oil, 5-3, 6-3
Filter Element,Oil, 2-3, 2-3
Filter Kit, Lpg Lockoff, 2-71
Filter, Assy, Air, 2-83, 2-85
Filter, Backflush 35 Mesh, 3-5
Filter, Foam, 2-207
Filter, Fuel [Gm 1.6l/3.0l], 2-101
Filter, Fuel, Lpg [Coalescent], 2-69
Filter, Fuel, 2-3, 2-53, 2-97, 2-3
Filter, Fuelock, [Ballwin#4-2384b], 2-105
Filter, Fuelockoff, Lpg, 2-63
Filter, Inline, Pf06/Pf06, 80 Mesh, 2-207
Filter, PKG, Panel, 94 Pleats, 2-25
Fitting , Elbow Gr, 4-37
Fitting Assy, Cap, 0.070b, Pf04/Bm08 (Repl. by 9002438), 2-203
Fitting Assy, Cap, 0.093b, Pf04/Bm08 (Repl. by 9002439), 2-203
Fitting Assy, Orifice, 0.070b, Pf04/Pf04, 2-203
Fitting Assy, Orifice, 0.093b, Pf04/Pf04, 2-203
Fitting Brass Str, 2-63
Fitting Kit [Epr], 2-75
Fitting, Hyd, E45, Jm06 /Om04, 2-143
Fitting, Hyd, E45, Jm20 /Om24, 2-143
Fitting, 90 Deg, 2-51
Fitting, Brass Drain Cock, 2-53, 2-63, 2-121, 2-123, 2-125, 2-127
Fitting, Brass E90, 2-63
Fitting, Brass, Elbow, 2-61
Fitting, Brs, Adapter, 2-71
Fitting, Brs, Drain Cock, 2-65
Fitting, Brs, E45, Pm02/Pf02, 2-65
Fitting, Brs, E90, Em10/Pm06, 2-81
Fitting, Brs, E90, If05/Pm04, 4-49, 4-51
Fitting, Brs, E90, Pm06/Em10, 2-65
Fitting, Brs, E90, Cf03/Pf02, 2-205
Fitting, Brs, E90, Em05/Pm04, 2-101
Fitting, Brs, E90, If06/Pm04, 2-99
Fitting, Brs, E90, Pm04/Bm08, 2-203, 2-205

Fitting, Brs, E90, Pm04/Pf04, 2-107, 2-109
Fitting, Brs, Flng, Bm08, 2-203
Fitting, Brs, Qdc, Pf04 Lpg Fem, 2-107, 2-109
Fitting, Brs, Rst, Pf04/.69-16f, .063, 2-69
Fitting, Brs, Str, Bm05/Pm02, 2-97
Fitting, Brs, Str, If05/Pm02, 2-97
Fitting, Brs, Str, Pm08/Pf06, 2-55, 2-67, 2-69
Fitting, Brs, Str, Bm05/Pm04, 2-101
Fitting, Brs, Str, If05/If05, 2-99
Fitting, Brs, Str, Pf02/Pm04, 2-203
Fitting, Brs, Str, Pf04/Pf04, Bkhd, 2-107, 2-109
Fitting, Brs, Str, Pf06/Pm08, 2-57
Fitting, Brs, Str, Pm02, Service, 2-83, 2-85
Fitting, Brs, Str, Pm02/Bm04, 2-205
Fitting, Brs, Str, Pm04/Bm06, T, 2-69
Fitting, Brs, Str, Pm04/Pm04, 2-203
Fitting, Brs, Str, Pm08/Pf04, 2-69
Fitting, Brs, Tee, Pf04/Pf04/Pf04, 2-203
Fitting, Bshg, 2-59, 2-75
Fitting, Bulkhead Fem,, 3-3
Fitting, Cap, 2-71
Fitting, Coolant Plug, 4-45, 4-47, 4-49, 4-51
Fitting, Draincock, .25npt 90, 2-69
Fitting, Draincock, E90, .25npt, 2-127
Fitting, E, Gr, 4-41
Fitting, E70, 2-71
Fitting, E90, 2-59, 2-71, 2-75, 2-76
Fitting, El 90Npt/Npt 04Pf-, 2-103, 2-105
Fitting, Elbow Gr, 4-37
Fitting, Elbow, 2-53, 2-55, 2-67, 2-69, 2-103, 2-105
Fitting, Fuel Inlet, Lpg, 4-45, 4-47
Fitting, Fuel, Str, 0.38-24 [07 Eng], 2-101
Fitting, Fuel, Str, 0.56-18 [07 Eng], 2-101
Fitting, Hose, 10hose/Pm06, 2-71
Fitting, Hose, Vacuum, .25, 2-71
Fitting, Hose, 2-55
Fitting, Hyd, E45, Pm04/Pf04, 2-105
Fitting, Hyd, E90 Jf06/Jm06, 2-37
Fitting, Hyd, E90, Jm04/Om04, 2-31
Fitting, Hyd, E90, Jm04/Om06, 2-159
Fitting, Hyd, E90, Jm04om04l, 2-161
Fitting, Hyd, E90, Jm06/Om08, 2-119
Fitting, Hyd, E90, Jm08/Om08, L, 2-31
Fitting, Hyd, E90, Jm08/Om08, 2-31, 2-143
Fitting, Hyd, E90, Jm08/Om10, 2-143, 2-217
Fitting, Hyd, E90, Jm08/Pm04, 2-69
Fitting, Hyd, E90, Jm10/Om12, 2-143
Fitting, Hyd, E90, Jm12/Om16, 2-143
Fitting, Hyd, E90, Pm06/Jm06, 2-51
Fitting, Hyd, E90, Pm08/Jm10, 2-65
Fitting, Hyd, E90, Swivel Pf04/Pm04, 2-65
Fitting, Hyd, Elbow, 2-35, 2-61
Fitting, Hyd, Plug, Jm06, 2-51
Fitting, Hyd, Plug, M18x1.5 Metric, 2-89
Fitting, Hyd, Plug, 2-37
Fitting, Hyd, Str, Jm04/Om04, 2-159, 2-217
Fitting, Hyd, Str, Jm05/Om06, 2-99
Fitting, Hyd, Str, Jm06/Om06, 2-99
Fitting, Hyd, Str, Jm06/Om08, 2-119
Fitting, Hyd, Str, Jm08/Om08, 2-117, 2-119, 2-157, 2-159
Fitting, Hyd, Str, Jm10/Om12, 2-143
Fitting, Hyd, Str, Metric, 2-37
Fitting, Hyd, Str, Pm04/Jm08, 2-69
Fitting, Hyd, Str, Pm04/Pf02, 2-65
Fitting, Hyd, Str, 2-35
Fitting, Hyd, Tee, Jf04/Jm04/Jm04, Run, 2-159
Fitting, Hyd, Tee, Pm04/Pf04/Pf04, 2-107, 2-109
Fitting, Nipple, .25mal, 2-75
Fitting, Nipple, .25npt, Brs, 2-71
Fitting, Pipe, E90, Pm02/Pf02, 2-83, 2-85
Fitting, Pipe, E90, Sf04/Pm04, 2-107, 2-109
Fitting, Pipe, Plug, Pm02 Soc Head, 4-45, 4-47, 4-49, 4-51
Fitting, Pipe, Plug, Pm02 Sq Head, 2-99, 2-101
Fitting, Pipe, Plug, Pm04 Hex Soc, 2-69
Fitting, Pipe, Str, Pm04/Pf02, 2-105, 2-107, 2-109
Fitting, Pipe, Tee, Pm06/Pf06/Pf06, 2-71
Fitting, Plastic Str 12Pf/16Pm, 2-197
Fitting, Plastic, Str,Ba.31Id-, 2-191
Fitting, Plastic, Str,Ba.31Id, 2-193, 2-195
Fitting, Plastic, 3-5
Fitting, Plstc, Pipe, Cap, Pf04, 2-205
Fitting, Plstc, Body, Spray, Pf04, 2-203
Fitting, Plstc, Cap, Spray, Pf04, 2-203
Fitting, Plstc, E90, Bm08/Pm04 Nyl, 2-203
Fitting, Plstc, E90, Bm08/Pm06, 2-207
Fitting, Plstc, E90, Bm08/Pm12, Nyl, 2-207
Fitting, Plstc, E90, Pf Bm [Es Pump], 4-41
Fitting, Plstc, E90, Swivel, Bm08/Pf08s, 2-207
Fitting, Plstc, Str, Bm04, Cplg, Fem, 2-205
Fitting, Plstc, Str, Bm06/Bm08, 2-195
Fitting, Plstc, Str, Bm08/Pm04 Nyl, 2-203
Fitting, Plstc, Str, Bm08/Pm06, 2-207
Fitting, Plstc, Str, Bm08/Pm12, 2-207
Fitting, Plstc, Str, Bm10/Bm10, 2-193, 2-195
Fitting, Plstc, Str, Bm12/Pm08, Nyl, 4-41
Fitting, Plstc, Str, Pm04, Cplg, Mal, 2-205
Fitting, Plstc, Str, Pm08/Pm08, 3-3
Fitting, Plstc, Str, Swivel, Pf08s/Bm08, 2-203
Fitting, Plstc, Str, 4-37
Fitting, Plstc, Tee, Bm08/Bm04/Bm08, 2-205
Fitting, Plstc, Tee, Bm10/Bm08/Bm10, 2-207
Fitting, Plstc, Tee, Bm12/Pf08/Bm12, 2-69
Fitting, Plstc, Y, Bm08/Bm08/Bm08 Nyl, 2-203
Fitting, Plstc, 3-5
Fitting, Plug, O-Ring [Eaton], 4-27
Fitting, Plug, Pm08 Sq Head, 2-65
Fitting, Plug, 2-113, 2-115
Fitting, Special, 2-61
Fitting, Str, E90, .25npt, 2-71
Fitting, Str, 2-71
Fitting-Barb, Strt 3/8 Id Hose, 3-7
Fitting-Barb,90Deg,3/8 Id Hose, 3-7
Fitting-Hyd Str, 2-135, 2-141
Fitting-Hyd Tee, 2-121
Fitting-Hyd, 2-141
Fitting-Plastic Str Blkhd 12Pf, 2-197, 2-199
Fitting-Plastic Str., 2-197
Fitting-Pls E90, 2-197, 3-3
Fitting, 2-51, 2-55, 2-57, 2-67, 2-69, 2-72, 4-39
Fittting, Plstc, Str, Bm06/M.69-16, 2-69
Flange Mounting, 4-11, 4-15
Flange, Mounting, 4-7, 4-9
Flange,Brg,3 Hole, 2-169
Flap, Containment, 2-117, 2-119
Flap, Protector, 2-199
Flapper, Valve, Pump, Water, 4-41
Flapper, Valve, 4-37, 4-39
Flasher Heavy Duty, 3-9
Flasher,12V.Ideal, 3-19
Float Bottle, 2-199, 3-3
Flywheel Ring Gear, 5-17
Flywheel, 5-17, 6-17
Foam, Sbdc, Lh, 3-33
Foam, Sbdc, Rh, 3-33
Frame Wldt, Mtg, Brush, 2-171
Frame Wldt, Mtg, Radiator, 2-111
Frame Wldt, Squeegee Lh, 2-183
Frame Wldt, Squeegee Rh, 2-181
Frame Wldt, 2-7
Frame, Air Duct, 2-113
Frame, Squeegee, 2-189
Frame&Mag.As, 5-9, 6-9
Ftg Qkdisc, Male, 3-3
Ftg. Brass, Elb, 0.4Npt-.04 Brb, 2-111, 2-113, 2-115
Ftg, Brass,St Bm03/Pm02, 2-33
Ftg, Breather, 2-33
Ftg, El90 Npt/02Pf-02Pm, 2-79, 2-81
Ftg, Grease.25-28Th 90 .75L, 2-19
Ftg, Grease.25-28Th Strt .47L, 2-19
Ftg, Grease.25-28Th Strt .63L, 2-27, 2-131
Ftg, Plastic,Str, 3-3
Ftg,Brass,St Bm03/Pm02, 2-63
Ftg,Bulkhead .25Npt Wh W21204, 2-103, 2-105
Ftg,Plstc,Elb,Barb.50Hs-.50Hse, 2-191, 2-193, 2-195
Ftg,Plstc,Elb,Barb.50Pt-.62Hse, 3-3
Ftg,Plstc,Nip. 0.75Ptx 1.68Lg, 2-197
Ftg,Plstc,Str,Barb.50Pt-.75Hse, 3-3
Ftg,Plstc,Tee.50-.50-.50Pipe, 3-3
Ftg-Brs E90 Bm05/Pm02, 2-95
Ftg-Brs E90 If05/Pm02, 2-95, 2-97
Ftg-Brs E90 Bm10/Pm06, 2-63
Ftg-El90 Npt/Npt S04Pf-04Pm, 2-63
Ftg-Hyd Crs Jm04/Om04, 2-175

Ftg-Hyd E45 Jm04/Om04, 2-27, 2-161, 2-163, 2-167, 2-175
Ftg-Hyd E45 Jm04/om04, 2-29
Ftg-Hyd E45 Jm06/Om06, 2-131
Ftg-Hyd E45 Jm08/Om08, 2-141, 2-161
Ftg-Hyd E45 Jm08/om08, 2-29
Ftg-Hyd E45 Jm12/Om12, 2-117, 2-119
Ftg-Hyd E45, 2-63, 2-111, 2-113, 2-115, 2-157, 2-159
Ftg-Hyd E90 Jm04/Jf04, 2-117, 2-119, 2-167
Ftg-Hyd E90 Jm04/Om04, 2-19, 2-27, 2-161, 2-165, 2-167, 2-171, 2-173, 2-177, 2-179, 2-187
Ftg-Hyd E90 Jm04/om04, 2-29
Ftg-Hyd E90 Jm06/Om04, 2-161
Ftg-Hyd E90 Jm06/Om06, 2-117, 2-119, 2-131, 2-179
Ftg-hyd E90 Jm06/Om06, 2-157
Ftg-Hyd E90 Jm08/Jf08, 2-179
Ftg-Hyd E90 Jm08/Om06, 2-141
Ftg-Hyd E90 Jm08/Om08, 2-157, 2-159, 2-173, 2-175, 2-177, 2-179
Ftg-Hyd E90 Jm10/Jf10, 2-141
Ftg-Hyd E90 Jm10/Om12, 2-141
Ftg-Hyd E90 Jm12/Om12, 2-179
Ftg-Hyd E90 Jm16/Om12, 2-121, 2-123, 2-125, 2-127
Ftg-Hyd E90 Jm16/Om16, 2-111, 2-113, 2-115
Ftg-Hyd E90 Pm08/Jm12, 2-63
Ftg-Hyd Plg Jm08, 2-157, 2-159
Ftg-Hyd Plg Om10, 2-157, 2-159
Ftg-Hyd Plg Om12, 2-135
Ftg-Hyd Rst Jm04/.047, 2-19
Ftg-Hyd Str Jm08/Om10, 2-213, 2-215, 2-217
Ftg-Hyd Str Jm04/Jf06, 2-157, 2-159
Ftg-Hyd Str Jm04/Om04, 2-19, 2-131, 2-161, 2-169, 2-173, 2-177
Ftg-Hyd Str Jm04/om04, 2-29
Ftg-Hyd Str Jm04/Om06, 2-135, 2-219
Ftg-Hyd Str Jm04/Om08, 2-117, 2-119
Ftg-Hyd Str Jm06/Om04, 2-141, 2-157
Ftg-Hyd Str Jm06/Om06, 2-157, 2-179, 2-219
Ftg-Hyd Str Jm06/Om08, 2-117, 2-157, 2-159
Ftg-Hyd Str Jm08/Jf12, 2-121, 2-141
Ftg-Hyd Str Jm08/Om06, 2-141
Ftg-Hyd Str Jm08/Om08, 2-135, 2-169, 2-179
Ftg-Hyd Str Jm08/om08, 2-29
Ftg-Hyd Str Jm08/Om10, 2-157, 2-159, 2-165
Ftg-Hyd Str Jm10/Om12, 2-131, 2-141
Ftg-Hyd Str Jm16/Om12, 2-121, 2-123, 2-125, 2-127
Ftg-Hyd Str Jm16/Om16, 2-117, 2-119
Ftg-Hyd Str Pm04/Pf02, 2-63
Ftg-Hyd Str See60054 Jm12/Jf16, 2-121
Ftg-Hyd Str, 2-157, 2-159
Ftg-Hyd Tee Jm04Jfjm, 2-175
Ftg-Hyd Tee Jm04Jmjf, 2-19, 2-135
Ftg-Hyd Tee Jm04Jmom, 2-19, 2-29, 2-157, 2-159, 2-179
Ftg-Hyd Tee Jm04Omjm, 2-117, 2-119
Ftg-Hyd Tee Jm06Jmjf, 2-157
Ftg-Hyd Tee Jm06Omjm, 2-157, 2-159
Ftg-Hyd Tee Jm08Jfjm, 2-141
Ftg-Hyd Tee Jm12Jfjm, 2-141
Ftg-Hyd, E90, 2-213, 2-215
Ftg-Hyd, 2-187
Ftg-Plstc E90 12Pf/12Pf, 2-197
Ftg-Plug Npt 02Pm Sq Hd, 2-95, 2-97
Ftg-Plug Npt 12Pm Rd Hd Plstc., 2-197, 2-199
Ftg-Tee Npt 04Pm- 04Pf- 04Pf, 2-63, 2-103, 2-105
Fuel, Fltr [Gm 1.6l/3.0l], 2-99
Fuelline, .31d Str/Str, Plstc, 2-99
Fuelline, .312 Od, 2-95
Fuelline, .31d 05if/05if Stl, 2-97
Fuelline, .31d 05if/05jf Stl, 2-99
Fuelline, .31d Bea/Bea Stl, 2-97
Fuelline, .31d E90/Str, Plstc, 2-99
Fuelline, .31d 05if/Qm Stl, 2-99
Fuelline, .31d E90, 05/06, Plstc, 2-101
Fuelline, .31d Str/Str, Plstc [8200], 2-101
Fuelline, .31d Str/Str, Plstc, 2-101
Fuelline, .38d .06if/Bea Stl, 2-99
Fuse, 10 Amp, 2-279
Fuse, 15 Amp, [Min-15], 2-278, 2-279
Fuse, 20 Amp, [Min-20], 2-278, 2-279
Fuse, 5 Amp, [Min-5], 2-278, 2-279
Fuse, 60 Amp, 2-279

G

Gage Kit, Hyd Tank, 3-40
Gas Cap, Protectoseal, 3-27
Gasket Cap, 2-201
Gasket Lid, 2-201
Gasket Oil, 5-5, 5-11
Gasket Water Outlet Connection, 5-23, 6-23
Gasket, .19, 4.05id 5.29od [Buna], 3-7
Gasket, .25 1.88d 1.0id [Poron], 4-41
Gasket, 2.00id 5.38od .19 [Buna], 3-29, 3-30
Gasket, 2.7D 1.5B.12T 5/ 2.1Bc, 2-95, 2-97
Gasket, 4.05id 5.29od .19 [Buna], 2-199, 2-201, 4-37, 4-39, 4-41
Gasket, Body, Throttle [1.6l], 2-59, 2-71, 2-75
Gasket, Carb To Engine, 2-61
Gasket, Carb, 2-57, 2-71
Gasket, Check Valve, 2-197, 4-37
Gasket, De-Mister, 2-199
Gasket, Drain Cap, 2-201
Gasket, Exh. Flange, 5-15, 6-15
Gasket, Exhaust, 2 Hole, 3.4bc, 2-91
Gasket, Exhaust, 2hole, 3.4bc, 2-93
Gasket, Flng, Exhaust, 2-93
Gasket, Head, 5-5, 5-6, 6-5, 6-6
Gasket, Hyd Cap, 2-157, 2-159
Gasket, Lpg, Adapter [Gm 2007], 2-75
Gasket, Lpg, Mixer [Gm 2007], 2-75
Gasket, Manifold, Intake, 2-59, 2-75
Gasket, Sender, Fuel, 2-99, 2-101
Gasket, Tank, 2-197
Gasket,Oil Pan, 5-5, 5-11, 6-5, 6-11
Gasket,Rocker Cover, 5-21, 6-21
Gasket, 2-3, 2-53, 2-55, 2-57, 2-61, 2-69, 2-71, 2-72, 2-89, 2-91, 2-189, 2-197, 2-199, 2-3, 4-39, 7-3, 7-5, 7-9, 7-11, 7-12
Gasspring, 120lb, 7.1strk, 2-23
Gauge, Sight Lh, 3-40
Gear Assy, 5-9, 6-9
Gear Motor Assy, 4-43
Gear, Ring [Fd], 6-17
Gear, 7-5, 7-11, 7-12
Geroler, 4-3, 4-5
Geroter & Coupler, 4-23, 4-25
Gerotor Assy Cl, 4-11
Gerotor S/A Cl, 4-17
Gerotor Set, 4-7, 4-9, 4-15
Gerotor, 4-27
Governor Assy, 8410 Lpg, 2-61
Governor Assy, 8410Gas 2.3, 2-53
Governor Assy, Ford 2.5 Gas, 2-53
Governor Assy, Ford 2.5 Lpg, 2-61
Governor, Gas, 2-53
Governor, Lpg, 2-61
Grill Wldt, Rear, 2-113, 2-115
Grill, Rear, 2-115
Grill, 2-111
Grip, Console Adjust Lever, 2-65
Grommet Rbr 0.25Id For .09Matl, 2-221
Grommet, Detergent Tank, 3-7
Grommet, Rbr, 0.63id, F/0.8h, .12 Matl, 3-11, 3-13, 3-15, 3-17, 3-19
Grommet, Rbr, 0.69id, F/0.1h, .25 Matl, 3-11, 3-13, 3-15, 3-17
Grommet, Rbr, 0.69Id, 3-7
Grommet, Rbr, 1.06id, F/ 1.4h, .19matl, 2-193, 2-195
Grommet, Rbr, 1.06id, F/1.4h, .19 Matl, 2-23
Grommet, Rbr,0.62Id,For .06Matl, 2-33
Grommet,Rbr,0.38Id,For .12Matl, 2-111
Grommet,Rbr,0.69Id,For.25Matl, 3-19
Grommet,Rbr,1.00Id,For .12Matl, 2-111, 2-113, 2-115
Grommet, 2-39, 2-57, 2-71
Gskt Kit,Lower, 5-5, 6-5
Gskt Kit,Upper, 5-5, 6-5
Gskt,Exh.Mnfld, 5-15, 6-15
Gskt,Frnt Cvr, 5-5, 6-5
Gskt,Front Cvr, 5-7, 6-7
Gskt,In.Manfld, 5-5, 6-5
Gskt,Int.Mnfld, 5-15, 6-15
Gskt,Oilpmp/Blk, 5-11, 6-11
Gskt,Pmp/Putube, 5-5, 6-5
Gskt,Pu Tube, 5-11, 6-11
Gskt,Rockr Cvr, 5-5, 6-5
Gskt,Water Pump, 5-5, 5-23, 6-5, 6-23

Gskt-Waterout, 5-5, 6-5
Guard Kit, Ohg, 3-20
Guard Kit, Overhead, 87 Height, 3-21
Guard Wldt, Fan W/Label, 2-117
Guard Wldt, Light, Revl/Flsh, 3-15, 3-17
Guard Wldt, Oh, Top, 3-20, 3-21
Guard, Alternator F/60559, 2-35
Guard, Belt, Alternator, 2-45, 2-47
Guard, Brush, 2-165
Guard, Scrub, Edge, 2-177
Guard, String, Brush Motor, 2-165
Guard, String, Scrub Brush, 2-173, 2-175, 2-177
Guide, Side Squeegee, 2-181, 2-183

H

Handle Lift Brush, 2-219
Handle, Arm, Safety, 2-19
Harness [7400/8410 Fast Update], 2-211
Harness, Adapter, Eng, Gas/Lpg [Gm3.0l], 2-287
Harness, Adaptor [800/8410], 2-278
Harness, Alarm, Backup, 3-19
Harness, Back, Fast, [8410], 2-211
Harness, Eng [3.0l, Gm, E-cntrl], 2-278
Harness, Eng, Gas [3.0l 2007], 2-279
Harness, Eng, Lpg [3.0l 2007], 2-279
Harness, Eng, 2-101
Harness, Engine, Gas/Lpg Gm 3.0L, 2-265
Harness, Front, Fast, [8410], 2-211
Harness, Hopper 8410, 2-257, 2-265, 2-278
Harness, Injector, Gas[3.0l Gm,E-Cntrl], 2-278
Harness, Jumper, Pump [7400/8410], 3-5
Harness, Light, Flsh, Revl, [355l], 3-15, 3-17
Harness, Light, Revl, Ohg [355l], 3-11, 3-13
Harness, Lpg Injector [3.0l, Gm,E-Cont], 2-278
Harness, Main, 8410 Gas/Lpg, 2-257, 2-265, 2-278
Harness, Switch, Oil Press, Ground Wire, 2-41, 2-43
Harness, Turn Signal, 3-9
Harness, Wire, Eng, 6-24
Head-W/O Valves, 5-6, 6-6
Head, 7-3
Headlight Assy,210G, 3-19
Headlight, 12vdc, 50watt [#70744], 2-23
High Alt Vaporizer Spring, 2-63
Hinge Wldt, W/Pin Engine Cover, 2-15
Hinge, .25pin .13 2.7w 03.0l 4/H&S, 2-23
Hinge, Door, Brush, 2-9, 2-11
Hinge, Seat, 2-13
Hinge, W/Pin, 2-15
Hinge, 2-15
Hook, Lift [Gm3.0l 2007], 2-43
Hopper Wldt, 2-21
Horn, 12vdc, Dba [Wolo], 2-23
Horn, Back-Up Alarm, 3-19
Hose Assy, Drain, 2-201
Hose Assy, W/1cuff, 1.5d 120l 1.5/, 3-29, 3-30
Hose Kit, Vacuum, Replmt [8410], 2-199
Hose, .50, 2-51
Hose, [Pcv], 2-39
Hose, 0050, 04, Im05str /If05str , 10.0, 2-99
Hose, 9.5mm X 450mm [Pcv], 2-57, 2-71
Hose, Afmkt, Pvc, Brd 0.75id 1ft, 2-195
Hose, Afmkt, Pvc, Brd 0.75id 3ft, 2-195
Hose, Afmkt, Pvc, Clr 0.25id 1ft, 2-205
Hose, Afmkt, Pvc, Clr 0.25id 2ft, 2-205
Hose, Afmkt, Pvc, Clr, 0.38id, 03ft, 2-127
Hose, Afmkt, Pvc, Wir, 0.50 Id 1ft, 2-195, 2-203, 2-205, 2-207
Hose, Air Intake, Molded, Gas, 2-79
Hose, Air Intake, Molded, 2-79, 2-81
Hose, Air, G/Lp [Gm 3.0], Mold, 2-81
Hose, Air, Rework, G/Lp [Gm 3.0], Mold, 2-81
Hose, Balancing, Press, 45mm, 2-71
Hose, Balancing, Press, 680mm, 2-71
Hose, Conv, 2-67, 2-69
Hose, Coolant, 1.50id To 1.75id, Mold, 2-123, 2-125, 2-127
Hose, Elbow, Molded 45 1.50Id, 2-121
Hose, Flex, Vacuum, 4.0d 30.0l, 2-217
Hose, Fuel, 0.31id [Evap Emission 07], 2-101
Hose, Fuel, .38d, Rbr, 2-59, 2-75
Hose, Fuel, 0.31id 31.0l, 2-99
Hose, Fuel, 0.50id 34.0l, 2-55
Hose, Fuel, 0.50id 52.0l, 2-57
Hose, Fuel, 165mm, 2-71
Hose, Fuel, Jf06e90, 20.3l, 2-99
Hose, Fuelline, 10.0L, 2-95, 2-97
Hose, Heater, 0.38id x 18.0l, 2-55
Hose, Heater, 0.38id x 18, 2-67
Hose, Heater, 0.38id x 21.0id, 2-67, 2-69
Hose, Heater, 0.38id, 2-55
Hose, Heater, 0.62id 13.0l, 2-81
Hose, Heater, 0.62id 18.0l, 2-83, 2-85
Hose, Heater, 0.62id 53.0l (Cut in 2), 2-65
Hose, Heater, 0.62id 48.0L, 2-65
Hose, Heater, 2-53
Hose, Hi Press, Lp, 2-67
Hose, Hyd Med08, 2-151, 2-155
Hose, Hyd, Hi 12, Jf Str/E90, 2-149, 2-153
Hose, Hyd, Low04, Jf04str/Jf04str, 015.0, 2-153
Hose, Hyd, Low04, Jf04str/Jf04str, 028.0, 2-155
Hose, Hyd, Low06, 24.0, 2-37
Hose, Hyd,Low04, Jf04str /Jf04e90 , 32.0, 2-155
Hose, Hyd,Low06, Jf06str /Jf06str , 26.0, 2-51
Hose, Hyd,Med08, Jf08str /Jf08e90 , 68.0, 2-155
Hose, Hyd,Tc 08, Jf08str /Jf08e90 , 19.0, 2-153
Hose, Hyd,Tc 08, Jf08str /Jf08e90 , 20.0, 2-155
Hose, Hyd, 2-149, 2-153
Hose, Intake, Gas, 2.00id [Epdm 8410], 2-85
Hose, Intake, Lpg, 2.00id [Epdm 8410], 2-85
Hose, Intake, Mold, 2.00id 2.00id [Epdm], 2-83, 2-85
Hose, Intake, Mold, 2.00id 2.00id, 2-83
Hose, Intake, Mold, E90 2.00id 2.00id, 2-83, 2-85
Hose, Lpg, 4Lpg X 35.0 Lg, 2-103, 2-105
Hose, Lpg, 52 L, 2-65
Hose, Lpg, Med05, 24.0l, 2-103
Hose, Lpg, Med05, Pm04str/Sm04str, 055.0, 2-109
Hose, Lpg, Med05, Pm04str/Sm04str, 27.0l, 2-107, 2-109
Hose, Lpg, Med05, Pm04str/Sm04str, 31.0l, 2-105, 2-107
Hose, Lpg, Med08, Jf08str/Jf08str , 10.5, 2-69
Hose, Lpg, Med08, Jf08str/Jf08str , 8.5, 2-69
Hose, LPG, 2-63
Hose, Lpg, 2-103, 2-105
Hose, Mold [Epr To Mixer], 2-76
Hose, Mold, .62 To .75, 2-71, 2-75
Hose, Mold, .62 X 37.0, 2-71
Hose, Molded, Es, 3-5
Hose, Molded, 2-53, 2-61
Hose, Pvc, .50Idx.73Od 34.0Lg, 2-191
Hose, Pvc, Brd, 0.62id 0.88od 09.00l, 3-5
Hose, Pvc, Brd, 0.62id, 2-193, 2-195
Hose, Pvc, Clr, 0.38id 0.56od 13.00l, 2-69
Hose, Pvc, Wir, 0.50id, 2-193, 2-195
Hose, Radiator, Lower, 2-121
Hose, Radiator, Upper, 2-121
Hose, Rbr, 1.25id 1.62od 03.0l, 2-123, 2-125
Hose, Rbr, 1.50id 1.88od 03.0l, 2-125
Hose, Rbr, 1.50id 1.88od 06.0l, 2-125
Hose, Rbr, 1.50id 1.88od 04.0l, 2-123, 2-125, 2-127
Hose, Rbr, 1.50id 1.88od 06.0l, 2-123
Hose, Rbr, E90, 1.50id 1.50id 06.3 04.5, 2-127
Hose, Rubber, 2-53, 2-61, 3-5
Hose, Sleeve, Fire, 2-143
Hose, Supply, Gas, .25id, 2-76
Hose, Vacuum,.16Id X 28.0Lg, 2-33
Hose, Vacuum, 2-35, 2-63, 2-213, 2-215, 2-217, 3-28
Hose, Valve, Fuel Trim, 325mm, 2-71
Hose, Valve, Press Trim, 405mm, 2-71
Hose, Vin Clr .5Id .70D .5L, 2-191, 2-193, 2-195
Hose, Vin Wir .5Id .7Od 47.0L, 2-191
Hose, Vin Wire .51D .70D 30.0L, 2-191
Hose, Vinyl .62Id .88Od 2.0L, 3-3
Hose, Vinyl .62Id .88Od 5.3L, 3-3
Hose, Vinyl Clr.38Id X 80.0Lg, 3-7

Hose, Vinyl Clr, .75Idx 65.0Lg, 3-3
Hose, Vinyl, Cl Nyre .38Idx21L, 3-7
Hose, Vinyl, Cl Nyre .38Idx28L, 3-7
Hose, Vinyl, Clear, 4-39
Hose, Vinyl, 2-191
Hose,.62 Idx60.00 Lng Heater, 2-191
Hose,Heater .62Idx31.0Lg, 2-63
Hose,Heater .62Idx53.0Lg, 2-63
Hose-Fuel, .31Id 23.0L, 2-95, 2-97
Hose-Hyd Hi 12 Jf/J9, 2-151
Hose-Hyd Low04 Jf/J9, 2-151, 2-155
Hose-Hyd Low04 Jf/Jf (Gas only), 2-155
Hose-Hyd Low04 Jf/Jf, 2-151, 2-155
Hose-Hyd Low06, 2-151, 2-155
Hose-Hyd Med 04 Jf/J9, 2-151, 2-155
Hose-Hyd Med 06, 2-151, 2-155
Hose-Hyd Med04 Jf/J4, 2-151, 2-155
Hose-Hyd Med04 Jf/J9, 2-151, 2-155
Hose-Hyd Med04 Jf/Jf, 2-151, 2-155
Hose-Hyd Med04, 2-151, 2-155
Hose-Hyd Med06 Jf/J9, 2-151, 2-155
Hose-Hyd Med08 Jf/J4, 2-151, 2-155
Hose-Hyd Med08 Jf/J9, 2-151, 2-155
Hose-Hyd Med08 Jf/Jf, 2-151, 2-155
Hose-Hyd Med08, 2-151, 2-155
Hose-Hyd Med16 Jf/J9, 2-151, 2-155
Hose-Lpg Med12 Spcl S12Jf/10J9, 2-63
Hose, 2-55, 2-111, 2-113, 2-115, 5-3, 6-3
Housing Assy Ce, 4-21
Housing Assy, Pump, 4-23, 4-25
Housing Assy, Throttle, Gas, [With Ecu] (See Breakdowns), 2-55
Housing Assy, Throttle, Gas, [With Ecu], 4-49
Housing Assy, Throttle, Gas, [Without Ecu] (See Breakdowns), 2-55
Housing Assy, Throttle, Gas, [Without Ecu], 4-51
Housing Assy, Throttle, Gas, 2-57
Housing Assy, Throttle, Lpg [Gm 3.0l], 2-71
Housing Assy, Throttle, Lpg, [With Ecu] (See Breakdowns), 2-67, 2-69
Housing Assy, Throttle, Lpg, [With Ecu], 4-45
Housing Assy, Throttle, Lpg, [Without Ecu] (See Bkdns), 2-69
Housing Assy, Throttle, Lpg, [Without Ecu] (See Breakdowns), 2-67
Housing Assy, Throttle, Lpg, [Without Ecu], 4-47
Housing Assy,, 4-5
Housing Assy, 4-27
Housing Cl, 4-11, 4-15
Housing Kit, Pump, Water, 4-41
Housing Wldt, Rear, 2-213, 2-215, 2-217
Housing Wldt, Vacfan, 9.0d Impeller, 2-31
Housing, Assy Cl, 4-3
Housing, Brg Cl, 4-3
Housing, Brg, 4-5
Housing, Flywheel [3.0l], 2-41, 2-43
Housing, Flywheel, Mach, Lr, 2-37
Housing, Flywheel, 2-37
Housing, Headlight, Hppr, 2-23
Housing, Rear Drive Support, 2-131
Housing, Thermostat [Gm3.0l 2007], 2-43
Housing, Throttle, 40mm [Bosch], 2-57, 2-59, 2-75
Housing, Throttle, Gas, 4-49, 4-51
Housing, Throttle, Lpg, 4-45, 4-47
Housing, Vac Fan W/Label, 2-213, 2-215, 2-217
Housing, 2-39, 4-7, 4-9, 4-19, 7-3, 7-5, 7-11
Hsg W/Brg, 5-9, 6-9
Hub & Stud, 2-131
Hub Assy, Brush Arm, 2-169
Hub, Brush Adaptor, 1.00B, 2-165
Hub, Drive, Brush, Disk, 1.00b 6t, 2-173, 2-175, 2-177
Hub, Drive, Brush, Disk, 3hole 5.8bc[6t], 2-4, 2-5
Hub, Pivot, 2-27

I

Ignition Coil, 5-24, 6-24
Ignition Module Kit, 6-24
Ignition Module, 5-24
Impeller 9.5 Dia. 18 Blade Mac, 2-213, 2-215, 2-217
Impeller, 9.00d X 0.376b, 2-31
Indicator Service Air Filter, 2-79, 2-81
Indicator, Filter, Air, 2-83, 2-85
Indicator,Oil, 5-3, 6-3
Injector, Fuel, Lpg [3.0l Gm] 8410, 4-45, 4-47
Injector, Gas, W/ Top And Bottom Org, 4-49, 4-51
Inner Cover, 5-7, 6-7
Insert, Cap, Mount, Es Pump, 4-41
Insert, Cap, 4-37
Insert, Plate, Cam, Pump, Hyd, 4-27
Insert-Oilfilt, 5-3, 6-3
Instr. Repair Info, Motor, 4-5
Instr, Pump Repair, 4-19
Instr, Repair, Pump, 4-27
Insulation Acoustic, 2-13
Insulation, 0.5, Ntch [Durablanket], 2-91, 2-93
Insulation, Acoustic .75Thk Ec, 2-13
Insulation, Acoustic, Hopper,, 2-21
Insulation, Acoustic, 2-13, 2-17, 2-25
Insulation, Acstc, 0.3, 13.0 X 6.5, 2-31
Insulation, Acstc, 0.5, 19.5 X 11.5 Ntch, 2-31
Insulation, Acstc, 0.8 27.6w 40.7l, 2-15
Insulation, S/Foam, 2-15
Insulation,Acoustic,Hopper,Upp, 2-21
Int.Manifold, 5-15, 6-15
Isolator [Epr], 2-75
Isolator Kit, Mtg, Vaporizer, Rbr, 2-71
Isolator, Box, Relay, 2-71
Isolator, Mtg, 2-37
Isolator, Rubber .25X1.50X6.00, 2-7
Isolator, Valve, 2-157, 2-159
Isolator, Vib, Bshg, 1.1d 0.6l .4b 0.78h, 2-31, 2-91, 2-93
Isolator, Vib, Flng, 1.3l .5b 2/.39h, 2-39, 2-41, 2-43
Isolator-Vibration .31-18, 2-113, 2-115
Isolator-Vibration, 125Lb. Ratng, 2-29
Isolator-Vibration,125Lb.Ratng, 2-87, 2-89, 2-111, 2-113, 2-115, 2-117, 2-119, 2-135, 2-137, 2-139, 2-161, 2-179, 2-213, 2-215, 2-217

J

Jose, Hyd, 2-153

K

Key Set,Switch, 2-221
Key Square 0.12 0.12 00.50 Lg, 4-12
Key Square 0.12 0.12 01.00 Lg, 4-13
Key, Shaft, Pump, Hyd, 4-27
Key-Wdruff 0.25 1.00 Asa#0808, 4-11, 4-15
Key, 4-3, 4-5, 4-14, 4-23, 4-25, 7-3, 7-11, 7-12
Kit, Adaptor, Manifold, 4-45, 4-47, 4-49, 4-51
Kit, Air Filter, Engine, 3-39
Kit, Backflush, W/Harness Replaces 379001 (See Breakdowns), 3-5
Kit, Bearing Crankshaft, 5-13
Kit, Brush, Motor, Ele, 4-41
Kit, Brush, 2-35, 4-39
Kit, Bumper, Squeegee, 2-189
Kit, Caster, Squeegee, 2-189
Kit, Connector, Coolant Sensor, 4-45, 4-47, 4-49, 4-51
Kit, Connector, Gas Injector, 4-49, 4-51
Kit, Connector, Govnr, 4-45, 4-47, 4-49, 4-51
Kit, Connector, Sensor, [Iat], 4-45, 4-47, 4-49, 4-51
Kit, Connector, Sensor, [Map], 4-45, 4-47
Kit, Engine (See 2.3L Engine Breakdown), 2-35
Kit, Fitting, Garden Hose, 3-3
Kit, Ftg, Coolant, 4-49, 4-51
Kit, Gasket, Manifold, 4-45, 4-47, 4-49, 4-51
Kit, Org, Injector And Reg, Gas, 4-49, 4-51
Kit, Org, Injector, Top And Bottom, Lpg, 4-45, 4-47
Kit, Reg, Gas Press, 4-49, 4-51
Kit, Repair, Fuelock, Mv 310-6, 2-105
Kit, Repair, Vaporizer, F/383170, 2-65
Kit, Replacement, Armrest, 2-13
Kit, Replm, Brackets F/83986/78733, 2-213
Kit, Replmt Brackets F/83986, 2-35
Kit, Replmt, Control, Govnr, [All Purps], 2-53, 2-61
Kit, Replmt, Controller, 4-45

Kit, Replmt, Pivot, Squeegee, 2-185
Kit, Rotating Group, 4-19
Kit, Rotating, Pump, Hyd [Cessna], 4-27
Kit, Seal, Hyd, Pump, 4-27
Kit, Seal, Pump, 4-19
Kit, Shim, Brg, 4-19
Kit, Shim, 4-27
Kit, Spacer, Brg, 4-19
Kit, Valve Handle, 3-29, 3-30
Kit, Valve, Check, Pump, Water, 4-41
Kit-Attaching, 5-9, 6-9
Knob, Adj, 2-189
Knob, Adjusting, 2-163, 2-167
Knob, Jam, 2-189
Knob, Rnd, 19d, Plstic, M6x12 Stud -Zn, 2-205

L

Label [Fast], 2-205
Label [Nfsi Certification], 2-17, 2-205
Label Set, Info & HZD 8400/8410, 2-288
Label Set, Operational 8400/8410, 2-288
Label Set, Opertnl, 2-211
Label, Attention Fast Users 5400s, 2-199, 2-205
Label, Fast, 2-17
Label, Instr, Filter Drain, 2-69
Label, Logo, Tennant, Oval, 254l,Blu/Grn, 2-23
Label, Numerals 8410, 2-288
Label, Tennant Logo-10.5 Blue, 2-13
Lamp Replmt Kit (5) F/59972, 2-223
Lamp Strobe, Amb [12-48 Vdc], 3-11, 3-13, 3-15, 3-17
Lamp, 12vdc, 2.1a, 32cp [#1156], 3-11, 3-13, 3-15, 3-17
Lamp, Bulb, Lamp, Flsh, 3-15, 3-17
Lamp, Bulb, Lamp, Strobe, 3-11, 3-13
Lamp, Replmt Kit (8) F/56330, 2-221
Lamp, Replmt Kit (8) F/59972, 2-221
Lanyard Assy, 3-20, 3-21, 3-28
Latch Assy, Lpg Tank Mtg,W/Nut, 2-103, 2-105
Latch Assy, Mtg, Tank, Lpg, W/Nut, 2-107, 2-109
Latch, Bolt, 2-9, 2-11
Latch, Draw, Flexible, 3-37
Latch, Elastic, 3-37
Latch, Hook, 2-11
Latch, Trigger, 2-15
Latch, 2-9, 2-169
Lens, Amb, Flsh Light [Fr207], 3-11, 3-15
Lens, Blu, Flsh Light [Fr207], 3-11, 3-15
Lens, Lamp, Amb, Strobe/Flasher, 3-11, 3-13, 3-15, 3-17
Lens, Light, Revl, Amb, 3-13, 3-17
Lens, Light, Revl, Blu, 3-13, 3-17
Lens, Light, Revl, Red, 3-13, 3-17
Lens, Red, Flsh Light [Fr207], 3-11, 3-15
Level Sensing Assy, 2-199, 3-3
Lever Wldt, Edge Scrubbing, 2-171
Lever, 5-9, 6-9
Lifter, 7-3
Lifting Eye, 5-15, 6-15
Light Assy Mark/Yel 12V- . A, 3-9
Light Assy Work/Clr 12V- . A, 3-18
Light Kit Signal, 3-9
Light Kit, Flsh, Ped, Ci [8400/10], 3-17
Light Kit, Side Brush, 3-18
Light Kit, Strobe, Ohg, Ci [8400/10], 3-11, 3-13
Light Kit, Strobe, Ped, Ci [8400/10], 3-15
Light, Check Eng, Amb, 14vdc, 2-221
Light, Flsh, 12vdc, Amb, Rwk 82198, 3-11, 3-15
Light, Flsh, 12vdc, Amb, Rwk, 3-13, 3-17
Link Wldt, Edge Scrubbing, 2-171
Link Wldt, Squeegee, Lh, 2-185
Link Wldt, Squeegee, Rh, 2-185
Link Wldt, Upper, 2-173, 2-175, 2-177
Link, Lower, 2-173, 2-175, 2-177
Linkage Kit, 2-53, 2-61
Locknut, 5-23, 6-23
Lower Cover, 5-7, 6-7

M

Main Brg,.002 Lower, 5-13
Main Brg,.002 Upper, 5-13
Main Brg,.010 Lower, 5-13
Main Brg,.010 Upper, 5-13
Main Brg,.030 Lower, 5-13
Main Brg,.030 Upper, 5-13
Main Brg,Stdblu, 5-13
Main Brg,Stdred, 5-13
Maint Kit, 400hr [8410 Gas, Ford], 2-3, 2-3
Maint Kit, 400hr [8410 Lpg, Ford], 2-3, 2-3
Maint Kit, 800hr [8410 Gas/Lpg/Dsl], 2-3, 2-3
Maint. Kit, Seals 355 Line, 2-3, 2-3
Maint. Kit, Skirts, 355 Line, 2-3, 2-3
Manifold, Exhaust [2007], 2-59, 2-75
Manifold, Exhaust, 2-55, 2-57, 2-69, 2-72
Manifold, Gas, Relief, Valve, 2-101
Manifold, Hyd Collector, 2-117, 2-119, 2-135
Manifold, Intake [2007], 2-59, 2-75
Manifold, Intake, 2-55, 2-57, 2-69, 2-72
Manifold, Soltn Cntrl, 2-193, 2-195
Manifold, Water Distribution, 2-191, 2-193, 2-195
Manual Pkg 8410, 3-44
Manual, CD-Rom, Oprts&Parts, All (NA), 3-44
Manual, Eng Service, Gm 3.0 L, 3-44
Manual-Fiche Pkg 8410, 3-44
Module, Ecu, Gas [Gm 3.0l], 2-57
Module, Ecu, Gas [Gm3.0l 2007], 2-59
Module, Ecu, Lpg [Gm 3.0l], 2-71
Module, Ecu, Lpg [Gm3.0l 2007], 2-75
Module, 7-5
Molding, Trim 11-14Ga 8.50, 2-17
Molding, Trim, Pvc, .08-.11 07.5l, 2-23
Molding, Trim, Pvc,.18-.31 02.8l, 2-217
Molding, Trim, Pvc,.18-.31 09.5l, 2-217
Motor 12V Dc, 4-37, 4-39
Motor, Ele, 12vdc, Pump, Water, 4-41
Motor, Hyd Gear Ex 0.13 L 3000, 4-13
Motor, Hyd Gear Ex 0.13L 3000 (See Breakdown), 2-213
Motor, Hyd Gear Ex 0.13L 3000, 2-215, 2-217
Motor, Hyd Gear Ex 0.26 R 3000, 4-12
Motor, Hyd Gear Ex 0.26 R3000, 2-117
Motor, Hyd Gear In 02.8 B 1500 (See Breakdowns), 2-169
Motor, Hyd Gear In 02.8 B 1500, 4-15
Motor, Hyd Gear In 07.3 B 1500 (See Breakdowns), 2-173, 2-175, 2-177
Motor, Hyd Gear in 07.3 B 1500, 4-11
Motor, Hyd Gear In 19.0 (See Breakdowns), 2-131
Motor, Hyd Gear In 19.0, 4-3
Motor, Hyd Gear, 4-5
Motor, Hyd, Gear, Ext 0.19 Lh 1800, 2-31
Motor, Hyd, Gear, Ext 0.29 Rh 3000, 2-119
Motor, Hydraulic, 4-7, 4-9, 4-14
Motor, Starting, Perm Mag, 12V, 5-9, 6-9
Motor,Elec Shaker 12V, 2-25
Motor-Hyd Gear In 14.13 B1500 (See Breakdowns), 2-165
Mount, Cable Tie, 3-11, 3-13
Mount, Filter, Remote, 2-51
Muffler, Catalytic [Gm3.0l, 8410 2007], 2-93
Muffler, Catalytic, [Gm3.0l 8410], 2-91
Muffler, Exhaust, 2-87, 2-89
Muffler, Spark Arresting, 3-26

N

Nozzle, Plastic Wand 14.OLG, 3-28
Nozzle, 7-11
Nut Hx Ss M 8X1.25, 2-181, 2-183
Nut M8-1.25, 5-15, 6-15
Nut Wheel .50-20 60 Angle, 2-131
Nut, Adj, Mtg, Tank, Lpg, 2-107, 2-109
Nut, Adjustable, Lpg Tank Mtg, 2-103, 2-105
Nut, Cart., Lng Cp, 4-29, 4-33, 4-35
Nut, Cart., Sht Cp, 4-29, 4-31, 4-33, 4-35
Nut, Conn Rod, 7-7
Nut, Conrod-8, 5-22, 6-22
Nut, Flanged, .38-24, 2-45
Nut, Flng, M8, 2-75
Nut, Hex, Flexlock, .31-24, Thin, 2-31
Nut, Hex, Flng, .38-16, 2-59, 2-75
Nut, Hex, Flng, M06 X 1.0, 2-65
Nut, Hex, Flng, M08 X 1.25, 2-39, 2-41, 2-43
Nut, Hex, Flng, M10 X 1.50, 2-127
Nut, Hex, Flng, M6 X 1.0, 3-11, 3-13
Nut, Hex, Flng, M8 X 1.25, 2-47, 2-49, 2-99, 2-101, 2-217, 3-19
Nut, Hex, Jam, M10 X 1.5, Ss, 2-173, 2-177
Nut, Hex, Lock, .25-20, Nl, 2-31, 2-101, 2-137, 2-139, 2-217

Nut, Hex, Lock, .25-28, Nl, 2-137, 2-139
Nut, Hex, Lock, .31-18, Nl, 2-51
Nut, Hex, Lock, .38-16, Nl, 2-47, 2-49, 2-173, 2-175, 2-177
Nut, Hex, Lock, .50-13, Nl, Ss, 2-189
Nut, Hex, Lock, .75-10, Nl, 2-131
Nut, Hex, Lock, M 6 X 1.0, Nl, 2-193
Nut, Hex, Lock, M08 X 1.25,Nl, 2-143
Nut, Hex, Lock, M10 X 1.5, Nl, Ss, 2-173, 2-177
Nut, Hex, Lock, M10 X 1.5, Nl, 2-31, 2-91, 2-137, 2-139, 2-167
Nut, Hex, Lock, M12 X 1.75,Nl, 2-21, 2-39, 2-41, 2-43, 2-137, 2-139, 2-169, 2-187
Nut, Hex, Lock, M4 X 0.7, Nl, 2-33
Nut, Hex, Lock, M5 X 0.8, Nl, 3-11, 3-13, 3-15, 3-17
Nut, Hex, Lock, M6 X 1.0, Nl, 2-21, 2-99, 2-135, 2-195, 3-11, 3-13, 3-15, 3-17
Nut, Hex, Lock, M6 X 1.0, Ss, Nl, 2-9, 2-11
Nut, Hex, Lock, M6 X 1.00, Nl, 2-101, 2-119
Nut, Hex, Lock, M8 X 1.25, Nl, Ss, 2-31, 2-133, 2-173, 2-175, 2-177, 2-187
Nut, Hex, Lock, M8 X 1.25, Nl, 2-85, 2-119, 2-125, 2-127, 2-135, 2-157, 2-159
Nut, Hex, M10 X 1.50 [Stover], 2-93
Nut, Hex, Sltd, 1.00-20, 2-133
Nut, Hex, Std, .25-20, 2-59, 2-75
Nut, Hex, Std, .25-28, 2-137, 2-139
Nut, Hex, Std, .38-16, 2-89, 2-91
Nut, Hex, Std, #10-24, 2-39, 2-41, 2-43
Nut, Hex, Std, M05 X 0.8, 2-39, 2-41, 2-43
Nut, Hex, Std, M10 X 1.25, 2-21
Nut, Hex, Std, M12 X 1.75, Ss, 2-9, 2-11
Nut, Hex, Std, M12 X 1.75, 2-133
Nut, Hex, Std, M4 X 0.7, 8, 2-99
Nut, Hex, Std, M4 X 0.70, 8, 2-101
Nut, Hex, Std, M5 X 0.8, 8, 2-99
Nut, Hex, Std, M5 X 0.80, 8, 2-101
Nut, Hex, Stover, M6 X 1.0, 2-91, 2-93
Nut, M6, 5-7, 6-7
Nut, Retainer R/.312 Dia, 2-19
Nut,M10, 5-11, 6-11
Nut,Wing .44-20 Special, 2-79, 2-81
Nut&Washer,M8, 5-9, 6-9
Nut-Hex Slot 1.12-18, 2-131
Nut-Hx Jam 1.00-14 Pltd, 3-3
Nut-Hx Jam .62-18, 2-185
Nut-Hx Jam .62-18Left Ss18-8, 2-185
Nut-Hxlocnyln .31-18 Thin Pltd, 2-171
Nut-Hxlocnyln .38-16 Thin Pltd, 2-181
Nut-Hxlocnyln .62-18 Thin Pltd, 2-185
Nut-Hxlocnyln M 5X0.8 Reg 18-8, 2-201
Nut-Hxlocnyln M 8X1.25 Reg Ss, 2-137, 2-139, 2-171, 2-183, 2-185, 2-191, 2-193, 2-195
Nut-Hxlocnyln M10X1.5 Reg 18-8, 2-181, 2-183, 2-185
Nut-Hxlocnyln M10X1.5, 2-87, 2-89
Nut-Hxslot .75-16 Pltd, 4-15
Nut-Low Crown .50-20 Pltd, 2-213, 2-215, 2-217
Nut-Wing .31-18 Pltd, 2-129
Nut, 2-55, 2-57, 2-69, 2-71, 2-219, 4-3, 4-5, 7-3, 7-9

O

O-Ring Gland, 2-141
O-Ring, Water Pump Adaptor, 5-23, 6-23
O-Ring,2.375, 5-11, 6-11
O-Ring-2.250, 5-11, 6-11
Oil Pan Assy, 5-11, 6-11
Oil Pan Spacer, 5-11, 6-11
Oil Pan, 7-9
Oil Pickup Tube, 5-11, 6-11
Oil Plug, 5-11, 6-11
Oil Pmp Sprkt, 5-11, 6-11
Oil Pump, 5-11, 6-11
Oil Seal, Front, 5-5, 5-13, 5-19, 6-5, 6-13, 6-19
Oil, Hydr. 15/40, 2-3, 2-3
Operator Manual, Es, 3-44
Operator manual, Fr, 3-44
Outer Cover, 5-7, 6-7
Outlet For engine serial numbers (013228-014999), 7-3
Output Shaft, 4-7, 4-9

P

Pad, Buff, 16.0d, Red, 2-5
Pad, Polish, 16.0d, White [1pad=1pc], 2-5
Pad, Scb, 16.0d, Blu [1pad=1pc], 2-5
Pad, Stripping, 16.0d [Hi Prod 1pad=1pc], 2-5
Pad, Stripping, 16.0d, Brown [1pad=1pc], 2-5
Pad, Tread, 2-7, 2-137, 2-139
Pad, 2-135, 2-167
Pane, Acrylic, 3-40
Pane, Plstc, 2-13
Panel Wldt, Corner, 2-111
Panel Wldt, Cradle, Tank, Lpg, 2-107, 2-109
Panel Wldt, 2-103, 2-105
Panel, Instmt, Upper, [8410], 2-13
Panel, Instrument,Replmt Kit, 2-223
Panel, Lh, 2-17
Panel, MTG, Hose, 3-28
Panel, Perma-Filter, 2-21
Panel, Rh, 2-17
Panel, Shield, Heat, Muffler, 2-91, 2-93
Panel, Touch,Replmt Kitf/73214, 2-223
Pcv Vlv Asy, 5-3, 6-3
Pedal, Propel, Lower W/Tread, 2-137, 2-139
Pedal, Brake Lock, 2-135
Pedal, Propel, Upper W/Tread, 2-137, 2-139
Pin Assy, Side Brush W/Clip, 2-165
Pin Cl, 4-17
Pin Clevis .375 Dia X 1.13 Lg, 2-187
Pin Clevis 0.37 Dia X 0.75 Lg, 2-181, 2-183, 2-187
Pin Hair Cotter .056Dx1.1L, 2-181
Pin Wldt, Scrub Head, 2-171
Pin Wldt, 2-187
Pin, 1/4X.32, 5-19, 6-19
Pin, Clevis .31 Dia X 4.50 Lg, 2-137, 2-139
Pin, Clevis .50 Dia X 2.25 Lg, 2-27
Pin, Clevis .50 Dia X 4.50 Lg, 2-137, 2-139
Pin, Clevis .75 Diax5.5Lg, 2-165
Pin, Clevis, 0.37 Dia 2.25Lg, 2-187
Pin, Clevis, 0.37d X 1.00l, 2-133
Pin, Clevis, 0.38d X 1.13l, 2-133
Pin, Clevis, Grooved, 2-19
Pin, Clevis, Upper, 2-19
Pin, Cotter .125X1.25, 2-167
Pin, Cotter, .125 X 1.25, 2-177
Pin, Cotter, .250 X 1.25, 2-173, 2-177
Pin, Dowel, Pump, Hyd, 4-27
Pin, Dowel, 4-23, 4-25
Pin, Hair Cotter .375D .072Wir, 2-181, 2-183, 2-187
Pin, Hair Cotter 13D 3 Wire, 2-137, 2-139
Pin, Hitch, 2-189
Pin, Lift Arm, 2-19
Pin, Retainer, 2-71
Pin, Roll Ce, 4-21
Pin, Roll, 2-37, 4-19
Pin, Scrub Brush, .625D 5.00L, 2-173, 2-175, 2-177
Pin, Scrub Head, .75D X 6.812L, 2-171
Pin, Support, Wheel, Rear, 2-131
Pin,Clevis, .50 Diax 1.25 Lg, 2-27
Pin,Clevis,0.25 Dia.X 0.75 Lg, 2-171
Pin,Clevis,0.31 Dia X 1.00 Lg, 2-181, 2-183
Pin,Clevis,0.37 Dia.X 1.50 Lg, 2-163, 2-181
Pin,Clevis,0.37 Dia.X 6.12 Lg, 2-173, 2-175, 2-177
Pin,Clevis,0.50 Dia.X 1.50 Lg, 2-167
Pin,Clevis,0.50 Dia.X 1.75 Lg, 2-167, 2-171
Pin,Clevis,0.50 Dia.X 2.00 Lg, 2-27
Pin,Clevis,0.50 Dia.X 2.50 Lg, 2-177
Pin,Clevis,0.50 Dia.X 5.00 Lg, 2-165, 3-33, 3-35
Pin,Clevis,0.50 Dia.X 5.50 Lg, 2-165, 3-35
Pin,Hair Cotter #Lhcot-2,Leitk, 3-33
Pin,Roll,.18Odx1.25L,.187/.192, 2-27
Pin,Roll,.38Odx2.00L,.375/.382, 2-27, 2-169
Pin, 2-37, 2-189, 4-19, 7-5, 7-7, 7-9, 7-11
Pipe, Exhaust, Ford 2.3, 2-87
Pipe, Exhaust, Gas/Lpg, 2-87
Pipe, Exhaust, 2-87
Pipe, 2-67, 2-69
Piston Pin, 5-22, 6-22
Piston, .020" O.S., 7-7
Piston, Control Ce, 4-21
Piston, Hi-limit, 7-7
Piston, Std., 5-22, 6-22

Piston, STD, 7-7
Piston, 4-19
Pivot Assy, S Br, 2-165
Pivot Wldt, 2-185
Pivot, 2-189
Planet Bearing, 5-9, 6-9
Plate & Brg, 5-9, 6-9
Plate - Hose Support, 2-131
Plate Kit, Valve, Replmt, 4-23
Plate Kit, 7-12
Plate Seal, 2-169
Plate Wldt, Backing, 2-23
Plate Wldt, Floor, 2-13
Plate, Backup, 3-3
Plate, Cam, 4-27
Plate, Circuit Breaker, 2-225
Plate, Cover, 4-23, 4-25, 4-27
Plate, Drive, 2-39, 2-41, 2-43
Plate, Injector Mtg, W/ Screw, 4-45, 4-47, 4-49, 4-51
Plate, Mounting, Latch, 2-169
Plate, Mounting, Shaker Filter, 2-25
Plate, Mounting, Valve, 2-179
Plate, Mounting, Vaporizer, 2-63
Plate, Mtg, Air-Clnr, 2-83, 2-85
Plate, Mtg, Channel, 2-113, 2-115
Plate, Mtg, De-Mister, 2-199
Plate, Mtg, Light, 3-11, 3-13
Plate, Mtg, Main Brush Shaft, 2-169
Plate, Mtg, Radiator, 2-113, 2-115
Plate, Mtg, Steering Boot, 2-219
Plate, Mtg, W/ Screw, [Ecu], Gas, 4-49
Plate, Mtg, W/ Screw, [Ecu], Lpg, 4-45
Plate, Mtg, 2-35
Plate, Orifice, 0.070id, 2-203
Plate, Orifice, 0.093id, 2-203
Plate, Pin, Clevis, Upper, 2-19
Plate, Reainer, Front, Sbdc, 3-33
Plate, Retainer, Cover, Sbdc, 3-33
Plate, Retainer, Front,Lh Sbdc, 3-33
Plate, Retainer, Front, 2-3, 2-21, 2-3
Plate, Retainer, Sbdc, Rh, 3-33
Plate, Retainer, Wheel Pocket, 3-33
Plate, Retainer, 2-3, 2-21, 2-3
Plate, Seat, 2-13
Plate, Shield, Heat, w/Label, 2-123
Plate, Shield, Heat, 2-47
Plate, Shield, Muffler, 2-87, 2-89
Plate, Spacer, Mtg, Eng 2.3Fd, 2-37
Plate, Stiffener, Tray, Filter, 2-25
Plate, Swash, 4-19
Plate, Valve, Pump, Hyd, 4-27
Plate, Valve, 4-3, 4-5, 4-19, 4-25
Plate, Wear Cl, 4-17
Plate, 2-25, 2-55, 2-67, 2-69, 5-19, 6-19
Plug .06 O/S, 5-3, 6-3
Plug #2, 4-29, 4-31, 4-33, 4-35, 4-42
Plug #4, 4-5, 4-29, 4-31, 4-33, 4-35
Plug #6, 4-29, 4-31, 4-33, 4-35
Plug #8, 4-33, 4-35
Plug 1/4 Npt, 5-3, 5-6, 6-3, 6-6
Plug 3/8 NPT, 5-15, 6-15
Plug 3/8 Npt, 5-3, 6-3
Plug Assembly Cl, 4-3
Plug Assembly Ph, 4-3, 4-11, 4-15
Plug Assembly, 4-5
Plug Assy Cl, 4-17
Plug Gage #6, 4-42
Plug S/A, 4-23, 4-25
Plug Thread 1/2-13, 2-169
Plug Tube, 2-169
Plug Weld, Brush Drive, Sweep, 2-169
Plug Wldt, Idler, 2-169
Plug, 1.50 Cup, 5-3
Plug, 1/2Npt, 5-15, 6-15
Plug, Cap, Check Valve, 2-197
Plug, Control Box, 2-53, 2-61
Plug, Float, 2-199, 3-3
Plug, Hole, Injector, 2-76
Plug, Hole, Rnd, 1.00h .00-.17, Blk Nyl, 2-201
Plug, O-Ring, Motor, Hyd, 4-19
Plug, Orifice [Cp], 4-35
Plug, Orifice Cp, 4-29, 4-31, 4-33, 4-35
Plug, Panl, Switch, 2-13
Plug,1.50 Cup, 5-6, 6-6
Plug-Std 2.078, 5-3, 6-3
Plug, 4-9, 4-19, 5-7, 5-19, 6-7, 6-19, 7-3, 7-7, 7-9
Plugbtn .38H .03-.12 Blacknyl, 2-13
Plugbtn .50H .03-.12 Blacknyl, 2-13
Plugbtn .62H .03-.12 Blacknyl, 2-225
Plugbtn 1.00H .03-.12 Blacknyl, 2-13
Pole Piece, 7-5
Poppet, Valve, Check, 4-19
Pos Sol Control Drain Sys Kits, 3-29
Pos Sol Ctrl Drain Sys Kit Es, 3-30
Pulley, Cable, 1.5d, Nyl, 2-163, 2-167
Pulley, Cable, 1.5d Nyl, 2-133
Pulley, Fan, 2-45, 2-47, 2-49
Pulley, 2-35
Pump Adaptor Assy, 4-23, 4-25
Pump Assy, Charging, 4-27
Pump Assy, Column, Es (See Breakdowns), 3-5
Pump Assy, Column, Es, 4-41
Pump Body Kit, 4-37, 4-39
Pump Shaft, 4-37
Pump, Air, Ele, 12vdc, 2-205
Pump, Column, Es, 4-37
Pump, Detergent Metering (See Breakdowns), 3-7
Pump, Detergent Metering, 4-43
Pump, Detgt, 12vdc [560s], 2-205
Pump, Fuel, Gas, 2-97
Pump, Fuel, Hi Press [Gm 1.6l/3.0l], 2-101
Pump, Fuel, Hi-press [Gm 1.6l/3.0l], 2-99
Pump, Fuel, 2-95
Pump, Hyd Piston L 2.77 R 2500 (See Breakdowns), 2-141
Pump, Hyd Piston L 2.77 R 2500, 4-21
Pump, Hyd Piston V 1.24 R 4000 (See Breakdowns), 2-141
Pump, Hyd Piston V 1.24 R 4000, 4-25
Pump, Hyd Piston V 1.24, 4-23
Pump, Hyd, Piston [L] 2.75 [R] 2500 (See Breakdown), 2-143
Pump, Hyd, Piston [L] 2.75 [R] 2500, 4-19
Pump, Hyd, Piston [V] 1.24 [R] 4000 (See Breakdown), 2-143
Pump, Hyd, Piston [V] 1.24 [R] 4000, 4-27
Pump, Soltn, Ele, 12vdc [W/O Chk Valve], 2-203
Pump, Water (See Breakdowns), 3-5
Pump, Water, 4-39
Pump, 7-9

R

Race Thrust, 4-11, 4-15
Race, Bearing Ce, 4-21
Race, Bearing Cl, 4-17
Race, Bearing, Pump, Hyd, 4-27
Race, Bearing, 4-23, 4-25
Race, Inner Bearing, 4-23, 4-25
Race, Thrust, 4-7, 4-9
Radiator, F/1018063 Afmkt, 2-111, 2-113, 2-115
Rear Plate, 5-17, 6-17
Rectifier, 2-35
Regulator [Ep], 2-75
Regulator, 2-35, 2-67, 2-69
Reinforcement, 7-3
Relay, 12vdc, 20a, Spdt, 2-278, 2-279
Relay, 12vdc, 40a, Spdt N/O [Potter], 2-211
Relay, 12vdc, 40a, Spdt N/O, 3-11, 3-13, 3-15, 3-17
Relay, 12vdc, 40a, Spdt, 2-278, 2-279
Relay, Shrouded, 12 VDC, 3-19
Relay, Shrouded, 12 Vdc, 2-225
Relief Valve, 4-23, 4-25
Repair Info Cl, 4-17
Repair Info. Ce, 4-21
Repair Info. Cl, 4-3, 4-11, 4-15
Repair Info., 4-7, 4-9, 4-12, 4-13, 4-14
Repair Info, Pmp CE, 4-23, 4-25
Replacement Kit, Motor Hyd. F/53435 (See Breakdowns), 2-165
Replm Kit, Flywheel, 5-17
Replm Kit, Instr Panel F/83719, 2-221
Replm Kit, Instr Panel F/83720, 2-223
Replm Kit, Propel Cable, 2-137, 2-139
Replm. Kit, Rear Drive Housing, 2-131
Reservoir, 10.0 Gal, W/Label [8410], 2-157, 2-159
Resistor Assy W / 5 Pin Plug, 2-211
Restrictor, Jet, Coolant, 2-71
Retainer, Centering, Pad Rep.By370095, 2-5
Retainer, Frt Cl, 4-3
Retainer, Frt, 4-5
Retainer, Shield, 2-91, 2-93
Retainer, Skirt, Hppr, Rear, 2-3, 2-3
Retainer, Skirt, Hppr, Side, Front, 2-3, 2-3
Retainer, Skirt, Hppr, Side, Rear, 2-3, 2-3
Retainer, Skirt, 2-99, 2-101
Retainer, Squeegee, 2-181, 2-183

Retainer, 2-189, 5-9, 6-9, 7-5
Retaining Ring, 5-9, 6-9
Retnr.Gear, 5-9, 6-9
Ring Kit, .030" O.S., 7-7
Ring Kit, Std, 7-7
Ring Retain Ex, 0.75D, 2-201
Ring Set,Std., 5-22, 6-22
Ring, Retain, Ex0.50Od,Heavydt, 2-219
Ring, Retaining Cl, 4-17
Ring, Retaining, Ext, .88 Dia, 2-19
Ring, Retaining, External, 2-189
Ring, Retaining, Intl 2.00Dia, 2-19
Ring, Retaining, Pump, Hyd, 4-27
Ring, Retaining, 2-189, 4-19, 4-27
Ring,Retain,Ex,0.37Od,Selflock, 2-187
Ring,Retain,Ex,0.50Od,Selflock, 2-27
Ring,Retain,Ex,0.98Od,E-Ring, 2-135, 2-185
Ring-Drv.Stop, 5-9, 6-9
Ring, 4-3, 4-5, 7-12
Rivet, Plastic .250Dx.898, 2-13, 2-225
Rivet, Plastic .250X.898, 2-7, 2-9, 2-11, 2-21
Rivet, Plastic .250x.898, 3-31
Rivet, Plstc, .181d X 0.720, 2-23
Rivet, Plstc, .250d X 0.898, 2-211
Rivet, Plstc, .325d X 0.787, 2-23
Rod End .250-28 .25Dia, 2-137, 2-139
Rod End .312-24 W/Stud, 2-183
Rod End M10 X1.5 W/Stud, 2-173, 2-177
Rod Wldt, Pivot, 2-21
Rod, Hinge, 2-13
Rod, Latch, Steering, Tilt, 2-219
Rod, Piston, 4-19
Rod, Seat, 2-13
Rod, Thrd, 2 End, M08 X 1.3 02.7l, 2-31
Rod, Threaded, Brush Lift, 2-167
Rod, Tie, Squeegee, 2-183
Rod, 2-27, 2-133, 2-189, 5-19, 6-19, 7-3
Roller 1.75, 2-177, 3-35
Roller Bearing, 4-23, 4-25
Roller, Side Squeegee, 2-181
Roller, Thimble, 2-187
Roller, 3-35
Rollpin, 4-21
Rotating Kit Ce, 4-21
Rotating Kit, 4-23, 4-25
Rotator, 7-3
Rotor, 7-5

S

Scr Hex .38-16X1.00, 2-157, 2-159
Scr Hex M6X1.0, 2-117, 2-119
Scr Hex Ssm M8X55, 2-135
Scr Hexssm 10X1.5 25, 2-185
Scr Hexssm 5X0.8 25, 2-201
Scr Hexssm 6X1.0 25, 2-171
Scr Hexssm 8X1.25 30, 2-171, 2-181, 2-183
Scr Hexssm 8X1.25 25, 2-183
Scr Hexssm 8X1.25 X 20, 2-193, 2-195
Scr Hexssm 8X1.25, 2-171, 2-191
Scr Hexssm10X1.5 30, 2-181, 2-183
Scr Hexssm10X1.5, 2-185
Scr Pan M5X0.8 16, 2-199
Scr Soc .50-13X1.50, 2-131
Scr&Wash M6, 5-19, 6-19
Scr&Wsh,M6X15.0M, 5-21, 6-21
Scr&Wsh,M6X22.5, 5-7, 6-7
Scr-Hex M12X1.75 110 Full Thd, 2-137, 2-139
Scr-Hex .31-24X0.75 Nylon Loc, 2-137, 2-139
Scr-Hex M8X1.5 50, 2-29
Scr-Hexssm 8X1.25 16 Nylon Loc, 2-185
Scr-Hexssm 8X1.25 20 Nylnloc, 2-197, 2-199
Scr-Hexssm 8X1.25 25 Nylnloc, 2-137, 2-139
Scr-Set 10-24X0.25 Nylon Loc, 2-25
Scr-Shld .312Dx1.00L .25-20, 2-137, 2-139
Scr-Shld .375Dx0.38L .31-18, 2-113, 2-115
Scr-Shld .50Odx0.75L .38-16, 2-181
Scr-Soc M16X2.0 50 12.9Pltd, 2-131
Screen, 50 Mesh, Ss, 2-203
Screen, Fltr, 80 Mesh, 2-207
Screen, Muffler, 2-87, 2-89
Screen, Pump, Detergent, 3-7
Screen, Sol, Dbl Cylindrical, 3-5
Screen, w/Suction Pipe, 7-9
Screen, w/Tube, 7-9
Screw Cap Cp, 4-33, 4-35
Screw Cap Cl, 4-11
Screw Flat M8X1.25 50, 2-61
Screw Hexssm 6X1.0, 2-201
Screw Hexssm10X1.5 35, 2-181, 2-183
Screw Soc M 6X1.0, 2-61
Screw, .31-18X3.75, 4-23, 4-25
Screw, .38-16 X 1.00, 2-59, 2-75
Screw, .38-24 X 4.0, 2-45
Screw, Cap Ce, 4-21
Screw, Cap Cl, 4-3, 4-17
Screw, Cap, Pump, Hyd, 4-27
Screw, Cap, Valve, Hyd, 4-31
Screw, Cap, 4-5, 4-7, 4-9, 4-19, 4-23, 4-25, 4-27
Screw, Chz, M 5 X 0.8 X 55, 4.8, 2-115
Screw, Flat, M08-1.25X 20,10.9, 2-53
Screw, Flt, .25-20 X 1.00, Al, 2-31, 2-217
Screw, Flt, M5 X 0.8 X 16, 10.9, 2-169
Screw, Flt, M8 X 1.25 X 20, 10.9, 2-205
Screw, Hex, .25-20 X 0.50, 5, 2-39, 2-41, 2-43
Screw, Hex, .25-20 X 0.50, G5, 2-59, 2-75
Screw, Hex, .25-20 X 0.75, 5, 2-69
Screw, Hex, .25-20 X 0.75, G5, 2-59, 2-75
Screw, Hex, .25-20 X 0.75, Nl, 2-31
Screw, Hex, .25-20 X 1.00, 5, 2-173, 2-175, 2-177
Screw, Hex, .25-20 X 1.25, G5, 2-59, 2-75
Screw, Hex, .25-20 X 1.75, 5, 2-137, 2-139
Screw, Hex, .31-18 X 0.75, 5, 2-39, 2-41, 2-43, 2-123, 2-125
Screw, Hex, .31-18 X 1.00, 5, 2-47, 2-49, 2-115
Screw, Hex, .31-18 X 1.25, 5, 2-45, 2-51
Screw, Hex, .31-18 X 1.50, 5, 4-27
Screw, Hex, .31-24 X 0.75, 5, 2-45, 2-47, 2-49
Screw, Hex, .38-16 X 0.62, 5, 7-5
Screw, Hex, .38-16 X 0.75, 5, 2-47, 2-49
Screw, Hex, .38-16 X 0.75, G5, 2-127
Screw, Hex, .38-16 X 1.00, 5, 2-39, 2-41, 2-43, 2-47, 2-49
Screw, Hex, .38-16 X 1.25, 5, 2-81, 2-143
Screw, Hex, .38-16 X 1.75, 5, 2-81, 2-143
Screw, Hex, .38-16 X 2.00, Fl, 2-39, 2-41, 2-43
Screw, Hex, .38-16 X 2.25, 5, 2-45, 2-47, 2-49
Screw, Hex, .38-16 X 4.00, 5, 2-47, 2-49
Screw, Hex, .38-16 X 5.50, 5, 2-173, 2-175, 2-177
Screw, Hex, .50-13 X 1.25, 5, 2-143
Screw, Hex, .75-10 X 3.25, G5, 2-131
Screw, Hex, #10-24 X 0.50, Ss, 2-47, 2-49
Screw, Hex, M 6 X 1.0 X 20, Ss, 2-193, 2-195
Screw, Hex, M06 X 1.0 X 16, 8.8, 2-65
Screw, Hex, M06 X 1.0 X 20, 8.8, 2-65
Screw, Hex, M08 X 1.00 X 16, 10.9, 2-37
Screw, Hex, M08 X 1.25 X 25, 8.8, 2-39, 2-41, 2-43
Screw, Hex, M08 X 1.25 X 35, Ss, Nl, 2-179
Screw, Hex, M08 X 1.25 X 70, 8.8, 2-143
Screw, Hex, M10 X 1.25 X 35, 8.8, 2-21
Screw, Hex, M10 X 1.5 X 130, 8.8, 2-187
Screw, Hex, M10 X 1.5 X 20, Ss, 2-9, 2-11
Screw, Hex, M10 X 1.5 X 25, Ss, 2-9, 2-11
Screw, Hex, M10 X 1.5 X 30, 8.8, 2-127, 2-157, 2-159
Screw, Hex, M10 X 1.5 X 35, 8.8, 2-93
Screw, Hex, M10 X 1.5 X 40, 8.8, 2-93, 2-137, 2-139
Screw, Hex, M12 X 1.75 X 35, 8.8, 2-39, 2-41, 2-43
Screw, Hex, M12 X 1.75 X 60, 8.8, 2-39, 2-41, 2-43
Screw, Hex, M12 X 1.75 X 60, 10.9, 2-21
Screw, Hex, M12 X 1.75 X 80, 8.8, 2-169
Screw, Hex, M4 X 0.7 X 20, 8.8, 2-33
Screw, Hex, M5 X 0.8 X 12, Ss, 2-135
Screw, Hex, M5 X 0.8 X 16, 8.8, 3-11, 3-13, 3-15, 3-17
Screw, Hex, M5 X 0.8 X 20, 8.8, 2-203
Screw, Hex, M6 X 1.0 X 12, Ss, Nl, 2-205
Screw, Hex, M6 X 1.0 X 16, 8.8, 2-93, 2-127, 3-11, 3-13
Screw, Hex, M6 X 1.0 X 16, Ss, Nl, 2-203
Screw, Hex, M6 X 1.0 X 20, 8.8, Nl, 2-23
Screw, Hex, M6 X 1.0 X 20, 8.8, 2-91, 2-93, 2-117, 2-119, 3-15, 3-17
Screw, Hex, M6 X 1.0 X 20, Ss, Nl, 2-169

Screw, Hex, M6 X 1.0 X 25, Ss, 2-9, 2-11, 2-21
Screw, Hex, M6 X 1.0 X 30, 8.8, 2-211
Screw, Hex, M6 X 1.0 X 35, Ss, 2-169, 2-203
Screw, Hex, M6 X 1.0 X 45, 8.8, 2-59
Screw, Hex, M6 X 1.0 X 50, 8.8, 2-101
Screw, Hex, M8 X 1.25 X 100, 8.8, 2-187
Screw, Hex, M8 X 1.25 X 16, 8.8, 2-47, 2-49, 2-119
Screw, Hex, M8 X 1.25 X 16, Ss, 2-203
Screw, Hex, M8 X 1.25 X 20, 8.8, 2-41, 2-43, 2-93, 2-99, 2-101, 2-125, 2-127, 2-143, 2-217, 3-15, 3-17, 3-19
Screw, Hex, M8 X 1.25 X 20, Ss, Nl, 2-205
Screw, Hex, M8 X 1.25 X 25, 8.8, 2-83, 2-85, 2-119, 2-217
Screw, Hex, M8 X 1.25 X 25, Fmg, 2-9, 2-11
Screw, Hex, M8 X 1.25 X 25, Ss, 2-9, 2-11, 2-187, 2-205
Screw, Hex, M8 X 1.25 X 30, 8.8, 2-85, 2-93
Screw, Hex, M8 X 1.25 X 30, Ss, 2-173, 2-175, 2-177
Screw, Hex, M8 X 1.25 X 35, Ss, Fl, 2-133, 2-137, 2-139
Screw, Hex, M8 X 1.25 X 40, 8.8, 2-187
Screw, Hex, M8 X 1.25 X 50, 8.8, 2-127
Screw, Hex, M8 X 1.25 X 55, Ss, 2-133
Screw, Hex, M8 X 1.25 X 70, 8.8, 2-157, 2-159
Screw, Hex, M8 X 1.25 X 80, 8.8, 2-119, 2-135
Screw, M6 X 10mm, 2-59, 2-75
Screw, Pan, M4 X 0.7 X 35, Ss, 2-5
Screw, Pan, M5 X 0.8 X 16, 4.8, 2-197
Screw, Pan, M6 X 1.0 X 35, Ss, 2-4, 2-5
Screw, Soc, .38-16 X 1.00, Al, 2-59, 2-75
Screw, Soc, .38-16 X 2.25, G5, 2-41, 2-43
Screw, Soc, #12-24 X 1.50, 2-75
Screw, Soc, M06-1.0 X 20,12.9, 2-53
Screw, Soc, M10-1.5 X 25, Al, 2-35
Screw, Soc, M6 X 1.00 X 70, 2-75
Screw,Hex, #10-24 X 0.50, Ss, 2-45
Screw,M6X22.5mm, 5-7, 6-7
Screw-Chs M 5X0.8 60 4.8, 2-111, 2-113
Screw, 2-45, 2-67, 2-69, 2-189, 4-7, 4-9, 4-19, 7-9
Screws, 4-23, 4-25
Seal Kit, 4-7, 4-9
Seal Kit, Cart Cp, 4-33, 4-35
Seal Kit, Cart Cp, 4-33, 4-35
Seal Kit, Cart Cp, 4-29, 4-31
Seal Kit, Cart, 4-33, 4-35
Seal Kit, Coil Cp, 4-33, 4-35
Seal Kit, Coil Cp, 4-29, 4-31
Seal Kit, Coil, 4-33, 4-35
Seal Kit, Hyd Mtr Gear Bn, 4-12, 4-13
Seal Kit, Motor, 4-14
Seal Kit, One Cartridge, 4-14
Seal Kit, Pump Ce, 4-21
Seal Kit, Pump, 4-23, 4-25
Seal Kit, Rear, 4-3, 4-5
Seal Kit, Shaft Cl, 4-3
Seal Kit, Shaft, 4-5
Seal Kit, Stg Cl, 4-17
Seal Replmt Kit, 2-223, 4-11, 4-15
Seal, Bearing, 2-219
Seal, Boot, Steering Column, 2-219
Seal, Bulb 140.0 Lg, 2-25
Seal, Bulb, Sd-0106 36.10 Lg, 2-13
Seal, Bulb, Sd-0106 65.00 Lg, 2-13
Seal, Bulb, Sd-0168 25.00 Lg, 2-13
Seal, Bulb, Sd-0504 21.25 Lg, 2-17
Seal, Bulb, Sd-0504 27.12 Lg, 2-15
Seal, Bulb, Sd-0504 29.50 Lg, 2-17
Seal, Bulb, Sd-0504 40.25 Lg, 2-15
Seal, Door, Brush, 2-9, 2-11
Seal, Door, Dump, Side, 2-3, 2-21, 2-3
Seal, Door, Dump, 2-3, 2-21, 2-3
Seal, Door, Hopper, 2-21
Seal, Duct, 2-111, 2-113, 2-115
Seal, Foam Rbr .8 .8 2.8L, 2-191
Seal, Foam Rubber, 2-9, 2-11, 2-21
Seal, Foam, Door, 3-31
Seal, Hose, 2-201
Seal, Inlet, Vacfan, 2-31
Seal, Lip, 90, 1.3w . Grip 050.0l, 2-23
Seal, O-Ring, .069 X 3.06id, 4-27
Seal, Org, .139 X 03.109 Id, 2-51
Seal, Org, 2-57, 2-71, 4-19
Seal, Rbr, Clsd, 1.50d 40.3l, 2-3, 2-3
Seal, Rear Drive Grease Cavity, 2-131
Seal, Rear, 5-5, 6-5
Seal, Replmt Kit, 2-221
Seal, Seat, Inner, 2-13
Seal, Tube, Silicone, 2-199
Seal, Ure .50 X .75 X 2.5L, 2-13
Seal, Ure, 0.38, 0.75w 13.2l Adh, 2-31
Seal, Ure, 0.38, 0.75w 33.0l Adh, 2-31
Seal, Wire, 4-19
Seal,Foam Rbr, .38 .75W 18.2L, 2-117, 2-119
Seal,Org, Lpg, Mixer [Gm 2007], 2-75
Seal,Valve Stem, 5-5, 6-5
Seal, 5-9, 6-9, 7-11
Sealant, [Rtv], 03.35oz, 7-7
Sealant, [Rtv], 05.00oz, 7-7
Sealer, 7-3, 7-5
Seat Belt Kit 8400/8410, 3-24
Seat Belt, 3-24
Seat Kit, Grammer 8400/8410, 3-22
Seat, Grammer, 3-22
Seat, Michigan, 2-13
Seat, Spherical, 4-19
Seat, Spring, 4-19
Seat, Valve, Check, 4-19
Send Unit, Temperature, 2-35
Send-Unit, Fuel [800/810 2007], 2-101
Send-Unit, Fuel, 2-99
Send-unit, Water, Temperature, .38npt, 2-55, 2-67, 2-69
Sending Unit, Oil Pressure, 2-39
Sending Unit, 2-95, 2-97
Sensor [T Map], 2-59, 2-75
Sensor, [Tmap], 2-57, 2-71
Sensor, Exhaust, Tailpipe, 2-93
Sensor, Manifold Press, 4-45, 4-47, 4-49, 4-51
Sensor, Oxygen [Gm 1.6l/3.0l 2007], 2-93
Sensor, Oxygen, 2-91
Sensor, Speed, Timing Wheel [3.0l], 2-57, 2-71
Sensor, Temp, Coolant, 2-57, 2-59, 2-71
Sensor, Temp, 2-57, 2-59, 2-71, 2-75, 4-45, 4-47, 4-49, 4-51
Sensor, Water Temp, 2-55, 2-67, 2-69
Sensor,Crnksft, 5-7, 6-7
Separator, 5-3, 5-24, 6-3, 6-24
Service Manual Pkg 8410, 3-44
Service Manual, Lrg 423 Fd (2.3L Engine), 3-44
Service Manual, Lrg 425 Fd (2.5L Engine), 3-44
Shaft Idler, 2-169
Shaft S/A, 4-5
Shaft Wldt, Brake, 2-135
Shaft Wldt, Main Brush, 2-169
Shaft, Assy Cl, 4-3
Shaft, Drive Ce, 4-21
Shaft, Drive, 4-23, 4-25, 4-27
Shaft, Output, 4-11, 4-15
Shaft, Pump, Water, 4-41
Shaft, Pump, 4-39
Shaft, 2-133, 7-5
Sheave, Eng Crank, Fd W/Tg, 2-35
Sheave, Water Pump, 5-23, 6-23
Shft Asy,Output, 5-9, 6-9
Shield Wldt, Heat, Manifold, 2-127
Shield, Dust, 2-39, 2-41, 2-43
Shield, Fan, Gas/Lpg [8410 07], 2-119
Shield, Fan, 2-117
Shield, Heat, Alternator [2007], 2-49
Shield, Heat, Manifold, 2-59, 2-75
Shield, Heat, W/Label, 2-125
Shield, Heat, 2-91, 2-93, 4-45, 4-47, 4-49, 4-51
Shield, Hyd Solenoid, 2-179
Shield, Tube, Plstc, 2-187
Shield, Valve, Water (Replaced by 1021095), 2-191
Shield, Water Valve, 2-197
Shield, 7-3
Shim .020Th 0.88Odx0.506Id, 2-213, 2-215, 2-217
Shim .060Th 0.880Dxo.506Id, 2-213, 2-215, 2-217
Shock Absorber, 2-137, 2-139
Shoe Set, Brake [1 Set=1pkg=2 Shoes], 2-133
Shoe, Plastic-Squeegee 14IN, 3-28
Short Tube, 5-3, 6-3
Shroud Wldt, Fan, Radiator, W/ Label, 2-117, 2-119
Shroud Wldt, Station, Oprtr, W/Label, 2-13
Shroud, Duct, Air, 2-115
Side Squeegee Se Kit, 3-35
Signal Turn, 3-9

Skirt, Brush Door, Inner, 3-31
Skirt, Brush Door, Outer, 3-31
Skirt, Brushdoor, 2-9, 2-11
Skirt, Cover, Sbdc, 3-33
Skirt, Deflection, Vac Kit, 3-31
Skirt, Deflection, 2-9, 2-11
Skirt, Front, Sbdc, 3-33
Skirt, Hopper, Top, 3-31
Skirt, Lip, 2-3, 2-21, 2-3
Skirt, Neo, .12, 05.88w 34.32l, 07 H&S, 2-3, 2-3
Skirt, Neo, .12, 08.00w 40.76l, 05 Sl, 2-3, 2-3
Skirt, Neo, .18, 04.00w 40.76l, 05 Sl, 2-3, 2-3
Skirt, Neo, .25, 03.50w 03.50l, 02 Hole, 2-23
Skirt, Rbr, .12, 20.00w 24.00l, 09/ H&S, 2-101
Skirt, Recirculation, 2-115
Skirt, Sbdc, Rh, 3-33
Skirt, Seal Main Brush, 2-7
Skirt, Side, Sbdc,, 2-3, 2-21, 2-3
Skirt, Side, 2-99
Skirt, Wheel Pocket, Sbdc, 3-33
Skirt,Hoppertop, 2-7
Sleeve Gr, 4-37
Sleeve, .370B .50D .50 Butwcd, 2-111, 2-113, 2-115
Sleeve, .414B .74D .92 Stl, 2-185
Sleeve, .562B .88D .50 Znc, 2-29
Sleeve, Alternator, 2-45, 2-47, 2-49
Sleeve, Bearing .625Od X .515, 2-181, 2-183
Sleeve, Nyl 35.0L, 2-177
Sleeve, Nyl 45.0L, 2-173
Sleeve, Nyl 8.0L, 2-167
Sleeve, Nyl See60150 #33 14.0L, 2-191
Sleeve, Nyl, #27 08.0l, 2-31
Sleeve, Nyl, #33 14.0l, 2-193
Sleeve, Nyl, #37 16.0l, 2-193
Sleeve, Nyl, 2-131, 2-173, 2-177
Sleeve, Nyln, 2-29
Sleeve, Nylon 25.0L, 2-163
Sleeve, Nylon, 2-171
Sleeve, Pump, Water, 4-41
Sleeve, Roller, 2-187
Sleeve, Throttle [Bosch], Plstc, 2-71
Sleeve,1.12B 1.38D1.00 Rubber, 2-25
Sleeve,1.12B 1.62D1.50 Rubber, 2-25
Sleeve-Nyln #38 25.0L, 2-169
Sleeve, 2-169, 2-173, 2-175, 2-177, 4-39
Solenoid, 5-9, 6-9
Spacer Rep.By222460, 2-133
Spacer Cl, 4-17
Spacer Hub, 2-173, 2-175, 2-177
Spacer Plate Cl, 4-11, 4-15
Spacer Plate, 4-7, 4-9
Spacer, .259Id 375Od .250Lg, 2-137, 2-139
Spacer, Carb F/Impco Ca-50, 2-61
Spacer, Coil Cp, 4-33, 4-35
Spacer, Pulley, 2-163, 2-167
Spacer, Sppt, Filter Lock Off, 2-71
Spacer, 2-37, 2-55, 2-67, 2-69, 4-19, 4-23, 4-25, 5-15, 6-15
Spark Plug Wires, 7-5
Spark Plug, 2-3, 2-3, 5-24, 6-24, 7-3
Spring Assy, Recirculation, 2-7
Spring Ce, 4-21
Spring Kit, Scu Cl, 4-17
Spring, Compression, 2-53
Spring, Conical Cp, 4-31, 4-33, 4-35
Spring, EXT, 3-28
Spring, Extension, 2-181, 2-183
Spring, Extention, 2-187
Spring, Gas 34 Lb 6.3 Stroke, 2-171
Spring, Gas 90Lb 5.98 Stroke, 3-20, 3-21, 3-28
Spring, Parking Brake, 2-135
Spring, Propel, Centering, 2-137, 2-139
Spring, Tens.750Dx.10Wirex4.5, 2-163
Spring, Tension, 2-21, 2-167, 2-173, 2-175, 2-177, 5-19, 6-19
Spring, Tors 0.75D 1.00L .060W, 2-135
Spring, Torsion, 2-135
Spring, Valve, Check, 4-19
Spring, Wir, 0.16d, Brush Retaining, 2-4, 2-5
Spring,Shaker, 2-25
Spring-Gas 90Lb 5.98Stroke, 2-15
Spring, 2-133, 4-3, 4-5, 4-19, 4-23, 4-25, 4-42, 7-3, 7-9
Sprng,Comp,0.62Idx.06Wire 2.3L, 2-219
Sprng,Comp,0.74Idx.11Wire 2.5L, 3-35
Sprng,Tens,0.87Odx.13Wire 9.0L, 2-185
Sprng,Tens,1.12Odx.14Wire 4.8L, 2-165
Squeegee Assy, Lh 8410, 2-183
Squeegee Assy, Rh 8410, 2-181
Squeegee Kit, Replmt, 2-189
Squeegee Wand Kit 8410, 3-28
Starter, 12vdc, Ford 2.3 Fd, 2-35
Starter, 2-39, 2-41, 2-43
Statnry Gear, 5-9, 6-9
Std.Exh.Valve, 5-21, 6-21
Std.Int.Valve, 5-21, 6-21
Steer Control, Hyd#2 06.1 1000 (See Breakdowns), 2-219
Steer Control, NYD#2 06.1 1000, 4-17
Steering Wheel Insert, 2-219
Strainer, Hyd, 25 Gpm 100 Mesh, 2-3, 2-3
Strainer, Screen,Solution Tank, 2-197
Strainer, Soltn, 20 Mesh, Cyl 4.0d 8.0l, 3-5
Strainer-Hyd Suction 25-100-03, 2-157, 2-159
Strap Bracket, 2-3, 2-3
Strap Cap Retainer, 2-201
Strap Weldmt, Gas Tank, 2-95, 2-97
Strap Wldt, Tank, .06th X 1.0w, 37.7l, 2-99
Strap Wldt, Tank, 0.06 1.0w 37.7l, 2-101
Strap. Mounting, Actuator, 2-53, 2-61
Strap, Backing Hopper, 2-7
Strap, Deflector, Lh (Not Shown), 3-31
Strap, Deflector, Rh, 3-31
Strap, Deflector, 2-9, 2-11
Strap, Door, Dump, Side, 2-3, 2-21, 2-3
Strap, Door, Dump, 2-3, 2-21, 2-3
Strap, Hinge - Lp Tank Mtg, 2-103, 2-105
Strap, Main Lip, 2-3, 2-21, 2-3
Strap, Motor, Shaker, 2-25
Strap, Mtg.- Lp Tank, 2-103, 2-105
Strap, Mtg, Tank, Lpg, Hinge, 2-107, 2-109
Strap, Mtg, Tank, Lpg, 2-107, 2-109
Strap, Tank Retainer - Lp, 2-103, 2-105
Strap, 2-3, 2-9, 2-11, 2-21, 2-3, 3-31
Strip Retainer Bearing, 2-169
Strip Wldt, Front Retainer, 2-189
Strip Wldt, Rear Retainer, 2-189
Strip, .12 .8w3 .3l2 .38dia 2.25ctr, 2-137, 2-139
Strip, Mtg, Gusset, 2-23
Strip, Mtg, 2-23
Strip, Nonslip, 2-189
Strip, Rbr, 0.06 01.00w 04.0l, 2-97, 2-99, 2-101
Strip, Retainer, Seal, 2-7
Strip, Retainer, Skirt, 2-9, 2-11
Strip, Retainer, 2-9, 2-11, 3-31
Stud M12, 5-3, 6-3
Stud, .003" O.S., 7-3
Stud, .013" O.S., 7-3
Stud, .38-16 X 1.2l, 2-57, 2-59, 2-75
Stud, Ball, .39d .31-16, Gasspring, 2-23
Stud, Ball, Gas Spring, 2-15, 2-171, 3-20, 3-21, 3-28
Stud, Wheel .50-20X1.50 pLTD, 2-131
Stud,M6X61.8mm, 5-7, 6-7
Stud,M8X51.0mm, 5-7, 6-7
Stud, 2-55, 2-57, 2-69, 2-71, 2-72, 5-15, 5-23, 6-15, 6-23, 7-11
Switch Assy, 4-42
Switch Ignition, 2-221
Switch, Hyd Flow Sensor (See Breakdowns), 2-141
Switch, Hyd Flow Sensor, 4-42
Switch, Press, 10psi, Spst, 2-203
Switch, Press, 12vdc 08a Spst Nc 0070psi, 2-105, 2-107, 2-109
Switch, Pressure Oil, 2-35
Switch, Pressure, 7psi, Spdt, 2-41, 2-43
Switch, Pressure, Lpg Nc 70Psi, 2-63
Switch, Pressure, 2-33
Switch, Progressive, 2-191, 2-193, 2-195
Switch, Pushmom, Spst100A 12V, 2-219
Switch, Rocker, 36vdc 05a Dpst On/N/On, 2-211
Switch, Rocker, 36vdc 05a Progressive, 2-211
Switch, Roller, 2-19, 3-9
Switch, Snap Actn, 250vdc 20a Dpdt, 3-3
Switch, Snap Actn, 250vdc 25a Spdt, 2-199
Switch, 2-65, 2-143

T

Tab,Fuelline, 2-95
Taillight Assy, W/Quick Disc, 2-111, 2-113, 2-115
Taillight Assy, 2-13
Tank Kit, Lpg, 43# 8400/8410, 3-38
Tank Recovery, 2-199
Tank, De-Mister, 2-199
Tank, Detergent, 3-7
Tank, Fuel W/Label, 2-95, 2-97
Tank, Fuel, 09.4gal, W/ Label, 2-101
Tank, Fuel, 9.4 Gal, W/ Label, 2-99
Tank, Lpg, 33lb, W/ Gauge [Empty] [Liq], 2-107, 2-109
Tank, Radiator Fill, 2-111, 2-113, 2-115
Tank, Solution, W/Label, 2-197
Tank-Lp,33@,Liq,Both,Fill Ga L, 2-103, 2-105
Tap.Assy-Valve, 5-21, 6-21
Tape, Video, Operator, 8410, 3-44
Temperature sensor, 5-23, 6-23
Tensioner, Arm, 5-19, 6-19
Term.Cover, 5-9, 6-9
Terminal, Bullet, Mal, .157d, 12ga, 3-11, 3-13, 3-15, 3-17
Terminal, Ring, .25stud 16-14ga, Ins, 3-11, 3-13, 3-15, 3-17
Therm 190 W/Gsk, 5-23, 6-23
Thermostat Assembly,140 Deg, 2-25
Thermostat, 7-3
Thr.Brg,.002 Upper, 5-13
Thr.Brg,.010 Upper, 5-13
Thr.Brg,.030 Upper, 5-13
Thr.Brg,Stdblue, 5-13
Thr.Brg,Stdred, 5-13
Thrust Bearing, 4-11, 4-15
Tie, Cable 1.75d Max 7.50lg, 2-191, 2-197
Tie, Cable 1.75D Max 7.50Lg, 2-137, 2-139, 2-179, 3-9, 3-19
Tie, Cable, Nyl, 07.3l .19w 1.8 Max D, 2-99, 2-101, 2-115, 2-193, 2-199, 3-7, 3-11, 3-13
Tie, Cable, Nyl, 11.4l .19w 3.0 Max D, 2-221
Tie, Cable, 2-63, 2-177
Tie, Wire 11-1/2x.19 Ny (not shown), 2-69
Timer, 9-41vdc, Recycling, 2-211
Timer, Backflush, 4-39
Timing Belt, 5-19, 6-19
Tire & Wheel Assy, Solid Non Marking Turf 18X7, 3-42
Tire & Wheel Assy, Solid Nonmark, 3-43
Tire & Wheel Assy, Solid Turf 18X7, 3-41
Tire & Wheel Assy, 2-131
Tire Assy, Solid, 18.0x5.0 1.56b, 2-133
Tire, Solid 18X5X12.12 Nonmark, 3-43
Tire, Solid 18X7X12.12 Turf, Non Marking, 3-42
Tire, Solid 18X7X12.12 Turf, 3-41
Tire, Solid, 18.0 X 5.0 X 12.1 [No Rim], 2-133
Tire, Solid, 18X6X12.125, 2-131
Touch Panel Replmt Kit F/84069, 2-221
Tower Wldt, Corner, 2-113, 2-115
Tray Wldt, Drip, Gas [3.0l], 2-57
Tray, Battery, 2-129
Tray, Detergent, 2-103, 2-105
Tray, Detgt, 2-107, 2-109
Tray, Filter Carrier, 2-25
Tray, Fuel, 2-95, 2-97
Tray, Mtg, Tank, Fuel, 2-99, 2-101
Tread, Floor, Non-Skid, 2-13
Tube Wldt, Leg, Ohg, Lh, 3-21
Tube Wldt, Exhaust, 2.0d[Gm3.0l 8410 07], 2-93
Tube Wldt, Intake, 2.0d .38npt, 2-81
Tube Wldt, Leg, Ohg, 3-21
Tube Wldt, Tee, 2-83, 2-85
Tube Wldt, 3-35
Tube, 0.62d 0.41b 0.6l, Ss, Cham, 2-181, 2-183
Tube, 01.00d 00.50b 01.0l Stl Pnt, 2-45, 2-47, 2-49
Tube, Air Bleed, 2-63, 2-65
Tube, Coolant, 1.5d Upper, Gas/Lpg, 2-123, 2-125
Tube, Coolant, 1.5d W/.25npt Low,Gas/Lpg, 2-123, 2-125
Tube, Coolant, Gas/Lpg [8410 2007], 2-127
Tube, Ds, 7-7
Tube, Exhaust, 2.0d [Gm3.0] [8410], 2-89
Tube, Exhaust, 2.0d [Gm3.0l 8410], 2-91
Tube, Exhaust, Tailpipe [Gm3.0l 8410], 2-93
Tube, Exhaust, 2-87
Tube, Hyd 06 Jf06/Jf06, 2-149
Tube, Hyd 08 Jf08/Jf08, 2-149
Tube, Hyd 10, 2-149
Tube, Hyd 12 Jf12/Jm12, 2-151, 2-155
Tube, Hyd 16 Jf16/Jf16, 2-149, 2-153
Tube, Hyd, Tank [8410], 2-153
Tube, Leg, Ohg, Lh, 3-20
Tube, Leg, Ohg, Rh, 3-20
Tube, Pvc, Shc80, Clr, 4.0l, 2-207
Tube, Radiator, Lower, Gas/Lpg, 2-121
Tube, Radiator, Upper [8410/Lpg/Gas], 2-127
Tube, Radiator, Upper, Gas/Lpg, 2-121
Tube, Retainer, Spring, 2-167
Tube, Vinyl, Pump, Water, 4-41
Tube,Spacer,.41Dx.32Bx1.Ol, 2-21
Tube, 2-173, 2-177
Tubing Connctr.Kit, Pmp, 4-43
Tubing, Vinyl, 4-37, 4-39
Turnbuckle, 2-185
Tvbe, Air Bleed, 2-53

V

Vac.Fitting, 5-15, 6-15
Vacuumized Skirt Kit, Main Bru, 3-31
Valve [Pcv], 2-59, 2-75
Valve Assembly, Solenoid, 4-14
Valve Assy, By-Pass, 4-27
Valve Cl, 4-3
Valve Guide Bushing, 5-21, 6-21
Valve Kit, Hyd, F/73094/84145, Replmt, 2-157
Valve Kit, Poppet, 4-43
Valve Rocker Arm Cover, 5-21, 6-21
Valve Rocker Arm, 5-21, 6-21
Valve Spring Key, 5-21, 6-21
Valve Spring Retainer, 5-21, 6-21
Valve Spring, 5-21, 6-21
Valve Stem 3W2P, 4-31, 4-33, 4-35
Valve Stem 4W2P, 4-29, 4-31
Valve Stem N.C. Cp, 4-31
Valve Stem N.O. Cp, 4-29
Valve Stem Seal, 5-21, 6-21
Valve Stem, 4-29, 4-31, 4-33, 4-35
Valve, [Pcv], 2-39, 2-57, 2-71
Valve, Body, Throttle, Lpg, 2-71
Valve, Check, 2gpm 2psi Bm04/Bm04, 2-205
Valve, Check, Pump, Water, 4-41
Valve, Check, 2-71, 2-197, 4-37, 4-39
Valve, Dump, 4-23, 4-25
Valve, Exhaust, 7-3
Valve, Fuelock, Lpg, W/ Wire Connector, 2-71
Valve, Hyd [Priority Ds16g1000], 2-157, 2-159
Valve, Hyd Cntrl Sol (See Breakdowns), 2-29
Valve, Hyd Cntrl Sol, 4-29
Valve, Hyd Control Sol (See Breakdowns), 2-161, 2-179
Valve, Hyd Control Sol, 4-31, 4-33
Valve, Hyd, Solenoid, 12vdc 0280psi (See Breakdowns), 2-179
Valve, Hyd, Solenoid, 12vdc 0280psi, 4-35
Valve, Intake, 7-3
Valve, Lock Off, 2-75
Valve, Lpg [Mixer], 2-75
Valve, Lpg, Press Relief, [Rego], 2-107, 2-109
Valve, Press Relief, Lpg Rego, 2-103, 2-105
Valve, Relief, 4000 Psi, 4-27
Valve, Solenoid, 12V Dc, 3-3
Valve, Solenoid, Water Flow, 12vdc, 2-193, 2-195
Valve, Trim, Fuel, Normal Flow, E90, 2-71
Valve, Trim, Fuel, Normal Flow, 2-71
Valve, Water, 12vdc, 6.0mm, 04pf, 2-203
Valve, Water, Sol. 12VOC, 2-191, 2-193, 2-195
Valve, Water, Sol, 12vdc, 10bm/10bm, 4-39
Valve, 4-3, 4-5, 7-7, 7-9
Vaporizer Repair Kit, 2-63
Vaporizer, Lpg, 2-63
Vaporizer, 2-67, 2-69
Vr, Filter, Screen, 50 Mesh .59d .8l Ss, 2-203
Vr, Isolator, Box, Relay, 2-59, 2-75
Vr, Nut, Solenoid, 4-35

Vr, Plug, Orifice [Cp], 4-33
Vr, Plug, Orifice, 4-35
Vr, Seal Kit, Cartridge, 4-35
Vr, Solenoid, 12vdc, W/ Mp, 4-35
Vr, Valve, Stem, No, 4-35
Vr, Washer, Flat, 0.38, Hardened, 2-59, 2-75

W

Wand, Metal - 2PC, 3-28
Warning Label, Starter, 5-21, 6-21
Wash M15 1.53Od, 5-13, 6-13
Washer .380B 1.22D .06 Ss18-8, 2-185
Washer .400B 1.12D .12Cr Znc, 2-13, 2-29, 2-87, 2-89, 2-111, 2-113, 2-115, 2-117, 2-119, 2-135, 2-137, 2-139, 2-213, 2-215, 2-217
Washer , 7-9
Washer 2.156B 3.50 Od .156 Felt, 2-131
Washer Flat .31, 2-135
Washer Flat .75, 2-135
Washer Flt 10 Ss, 2-201
Washer Flt .25 Ss, 2-171, 2-201
Washer Flt .31 Ss, 2-137, 2-139, 2-171, 2-181, 2-183, 2-191, 2-193, 2-195, 2-197
Washer Flt .38 Ss, 2-181, 2-183, 2-185, 2-187
Washer Flt .50 Ss, 2-181, 2-185
Washer Flt .62 Hard, 2-185
Washer Flt .75 Hard, 2-171
Washer Flt .75 SAE, 2-29
Washer, .250b .88D .06Neopre, 2-137, 2-139
Washer, .391B .75D .06Nylon, 2-113, 2-115
Washer, .400B 1.12D .12Cr.Znc, 2-161
Washer, .530B 1.50D .19Hr, 3-33
Washer, .531B 1.75D .12Cr.Znc, 2-169
Washer, .562B 3.03D .25Hr.Znc, 2-21
Washer, .656B 1.25D .06, 2-181, 2-183
Washer, .812B 1.06D .06Cr., 2-137, 2-139
Washer, 0.53b 1.88d .12, Stl, Pl, 2-39, 2-41, 2-43
Washer, Belleville, .31, 2-47, 2-49
Washer, Belleville, .38, 2-37, 2-39, 2-41, 2-43
Washer, Flat, .20b .50d .06, Alm, Blind, 3-15, 3-17
Washer, Flat, .25 Sae, 2-39, 2-41, 2-43
Washer, Flat, .31 Std, 2-39, 2-41, 2-43, 2-45, 2-51, 2-123, 2-125, 2-143
Washer, Flat, .38 Sae, 2-45, 2-47
Washer, Flat, .38 Std, 2-39, 2-41, 2-43, 2-45, 2-47, 2-81
Washer, Flat, .50 Sae, 2-143
Washer, Flat, .50 Std, 2-39, 2-41, 2-43
Washer, Flat, #08, Ss, 2-5
Washer, Flat, #10, Ss, 2-135
Washer, Flat, #10, 2-119, 2-135, 2-203, 3-11, 3-13
Washer, Flat, #8, Ss, 2-205
Washer, Flat, 0.25 Fender, 2-91, 2-93
Washer, Flat, 0.25 Fendr, 2-31
Washer, Flat, 0.25 Sae, 2-91, 2-93, 2-117, 2-119, 2-137, 2-139
Washer, Flat, 0.25 Ss, 2-9, 2-11, 2-193, 2-195, 2-203, 2-211
Washer, Flat, 0.25 Std, 2-21, 2-23, 2-99, 2-115, 2-133
Washer, Flat, 0.25, Sae, 2-101, 2-127
Washer, Flat, 0.25, Ss, 2-4, 2-5, 2-169
Washer, Flat, 0.25, Std, 2-59, 2-75, 2-101, 2-127, 2-157, 2-159
Washer, Flat, 0.28b 1.00d .06, Stl, 2-69
Washer, Flat, 0.31 Sae, 2-133
Washer, Flat, 0.31 Ss, 2-9, 2-11, 2-137, 2-139, 2-187, 2-203, 2-205
Washer, Flat, 0.31 Std, 2-41, 2-43, 2-125, 2-205, 2-217
Washer, Flat, 0.31, Ss, 2-173, 2-175, 2-177
Washer, Flat, 0.31, Std, 2-85, 2-93, 2-101, 2-119, 2-127, 2-133, 3-15, 3-17, 3-19
Washer, Flat, 0.34b 0.75d .12, Viton, 2-203
Washer, Flat, 0.34b 0.75d .12 [Viton], 2-203
Washer, Flat, 0.38 Sae, 2-49, 2-143
Washer, Flat, 0.38 Std, 2-83, 2-85, 2-137, 2-139, 2-143
Washer, Flat, 0.38, Hardened, 2-59, 2-75
Washer, Flat, 0.38, Sae, 2-127
Washer, Flat, 0.38, Std, 2-93, 2-127, 2-157, 2-159
Washer, Flat, 0.40b 1.12d .12, Stl, Pl, 2-91, 2-93
Washer, Flat, 0.40b 1.12d .12, Stl, Pl, 2-31
Washer, Flat, 0.44b 1.00 .08, Ss, 2-9, 2-11
Washer, Flat, 0.44b 1.00d .08, Ss, 2-173, 2-177
Washer, Flat, 0.50 Std, 2-187
Washer, Flat, 0.56b 1.38d .11, Ss, 2-9, 2-11
Washer, Flat, 0.56b 1.38d .11, Ss, 2-177
Washer, Flat, 0.75, Sae, 2-131
Washer, Flat, 1.00 Sae, 2-133
Washer, Flat, Belleville, .31, 2-119
Washer, Flat, Belleville, .50, 2-169
Washer, Flat, 2-171
Washer, Flt, .25 Sae, 2-65
Washer, Flt, Pump, Hyd, 4-27
Washer, Loc, M5, 2-39, 2-41, 2-43
Washer, Lock, .25, 2-39, 2-41, 2-43
Washer, Lock, .31, 2-39, 2-41, 2-43, 2-45
Washer, Lock, .38, 2-39, 2-41, 2-43, 2-45
Washer, Lock, #10, 2-39, 2-41, 2-43
Washer, Lock, 0.38, 2-59, 2-75
Washer, Lock, Int / Ext, 0.38, 2-59, 2-75
Washer, Lock, Int, .25, 2-65
Washer, Lock, Int, #08, 2-99, 2-101
Washer, Lock, Int, #10, 2-49, 2-99, 2-101, 2-197
Washer, Lock, Int-ext, .38, 2-47, 2-49
Washer, Poly, 3-29, 3-30
Washer, Pump, Hyd En, 4-27
Washer, Rbr, .12 0.66b 1.00d, 3-3
Washer, Rbr, 4-41
Washer, Rubber, 4-37
Washer, Sealing, 2-157, 2-159
Washer, Thrust, 2-131, 2-185
Washer,Nyl,0.405Bx0.812X.060Th, 2-163, 2-167
Washer-Belleville .25 Pltd, 2-121
Washer-Belleville .3 Pltd, 2-137, 2-139
Washer-Belleville .31 Pltd, 2-13, 2-213, 2-215, 2-217
Washer-Belleville .31 Pltd, 2-111, 2-113, 2-115, 2-187
Washer-Belleville .38 Pltd, 2-185
Washer-Belleville .50 Pltd, 2-21
Washer-Bellville .38 Pltd, 2-141
Washer-Flat .44 Std Nylon, 2-173, 2-175, 2-177
Washer-Flt .75, 2-117, 2-119
Washer-Flt .25 Fender Pltd, 2-117, 2-119
Washer-Flt .31 Fender Pltd, 2-111, 2-113, 2-115
Washer-Loc int .31 Ss, 2-113, 2-115
Washer-Loc Int-Ext .25 Pltd, 2-95
Washer, 2-37, 2-53, 2-55, 2-57, 2-69, 2-71, 2-189, 4-21, 4-23, 4-25, 5-9, 5-11, 5-19, 6-9, 6-11, 6-19, 7-5, 7-9, 7-12
Water Outlet, 5-23, 6-23
Water Pump, 5-23, 6-23, 7-12
Weight, Eccentric, 2-25
Wheel, 3 Inch Dia, 2-189
Wheel, 3 Inch Dia., 2-189
Wheel, Steering, 14.0d, Taper Bore, 2-219
Wingnut, 3-39
Wire Assy, 2-37
Wire Asy,Spark Plug, 5-24, 6-24
Wire Harness, 5-24
Wire Kit, 2-63
Wire, 42.0 Lg, 2Ga, Neg, 2-129
Wire, Ground, 2-35, 2-45, 2-47, 2-49
Wire, 4-19, 7-5
Wireharness, Backflush, 4-39

Y

Yoke, End-Adjustable, 2-163
Yoke, Pivot, Machining, 2-27

We Need Your Help...

As part of Tennant's Zero Defects Program, we want to know about errors you have found or suggestions you may have regarding our machine manuals. If you find an error or have a suggestion, please complete this postage-paid form and mail it to us. Thank you for helping us make zero defects a way of life at Tennant.

Manual No. _____ Rev. No._____ Publish Date _____ Page _____

Machine _____ ❑ Report Error ❑ Suggestion

_____

_____

_____

_____

_____

_____

_____

_____

_____

_____

_____

_____

_____

Name _____ Date _____

Customer Number _____

Company _____

Address _____

City/State/Zip Code _____

Fold along dotted lines

Tape here

NO POSTAGE
NECESSARY
IF MAILED
IN THE
UNITED SATES

BUSINESS REPLY MAIL

FIRST CLASS MAIL PERMIT NO. 94 MINNEAPOLIS, MN

POSTAGE WILL BE PAID BY ADDRESSEE

TENNANT COMPANY
Technical Publications #15
701 North Lilac Drive
P.O. Box 1452
Minneapolis, MN 55440-9947

We Need Your Help...

As part of Tennant's Zero Defects Program, we want to know about errors you have found or suggestions you may have regarding our machine manuals. If you find an error or have a suggestion, please complete this postage-paid form and mail it to us. Thank you for helping us make zero defects a way of life at Tennant.

Manual No. _____ Rev. No._____ Publish Date _____ Page _____

Machine _____ ❑ Report Error ❑ Suggestion

_____

_____

_____

_____

_____

_____

_____

_____

_____

_____

_____

_____

_____

Name _____ Date _____

Customer Number _____

Company _____

Address _____

City/State/Zip Code _____

Fold along dotted lines

Tape here

NO POSTAGE
NECESSARY
IF MAILED
IN THE
UNITED SATES

BUSINESS REPLY MAIL

FIRST CLASS MAIL PERMIT NO. 94 MINNEAPOLIS, MN

POSTAGE WILL BE PAID BY ADDRESSEE

TENNANT COMPANY
Technical Publications #15
701 North Lilac Drive
P.O. Box 1452
Minneapolis, MN 55440-9947