PowerBoss®
The Power of Clean

Phoenix 30
Spare Parts Catalog

PowerBoss,Inc.
A Member Of The Hako Group

Rev. 01A08

TABLE OF CONTENTS

Description	Assembly Reference	Page
Chassis, Cpl. Part 1	99706234BT10	4 / 5
Chassis, Cpl. Part 2	99706234BT20	6 / 7
Traction Drive Amer Brake	01170350	8 / 9
Chassis, Cpl. Part 3 - Suction Unit Connection	99706234BT30	10 / 11
Water Supply Part 1	99706234BT30-11	12 / 13
Water Supply Part 2	99706234BT30-2	14 / 15
Suction Unit Connection Part 1	03008100BT10	16 / 17
Suction Unit Connection Part 2	03008100BT20	18 / 19
Battery Tray	99706234BT40	20 / 21
Hopper Cpl. Part 1 - Lifting Disc Brush Head	99706234BT50	22 / 23
Dirty Water Drain Hose Cpl.	99706234BT50-1	24 / 25
Lifting Disc Brush Head	99706234BT50-2	26 / 27
Hopper Cpl. Part 2	99706234BT60	28 / 29
Adapter Cylindrical Brush Head Lift	99706234BT70	30 / 31
Squeegee Cpl. Part 1	99706234BT80	32 / 33
Squeegee Cpl. Part 2	99706234BT90	34 / 35
Suction Vac Motor Assembly	99706234BT100	36 / 37

TABLE OF CONTENTS

Description	Assembly Reference	Page
Squeegee Operation	99706234BT110	38 / 39
Squeegee Lock	99706234BT120	40 / 41
Operation handle	97099998	42 / 43
Console	97093975	44 / 45
Electric Part 1	99706234BT140	46 / 47
Retainer, Cpl.	99706234BT140-1	48 / 49
Electric Part 2	99706234BT150	50 / 51
Battery Charger 24V 22A	99706234BT160	52 / 53
Decal	99706234BT170	54 / 55
Cylindrical Brush Drive Head 70cm (27.55”)	99706234BT180	56 / 57
Cylindrical Brush Drive Head Cpl., Part 1	99706234BT181-1	58 / 59
Debris Hopper Cpl.	99706234BT181-1A	60 / 61
Cylindrical Brush Drive Head Cpl., Part 2	99706234BT181-2	62 / 63
Carrier, Cpl	01072560	64 / 65
Cylindrical Brush Drive Head Cpl., Part 3	99706234BT181-3	66 / 67
Notes		68 / 69
PowerBoss Made Simple Industrial Limited Warranty		70 / 71

Phoenix 30 (99706234) Rev.00 18/01/08
99706234BT10 Chassis, Cpl. Part 1

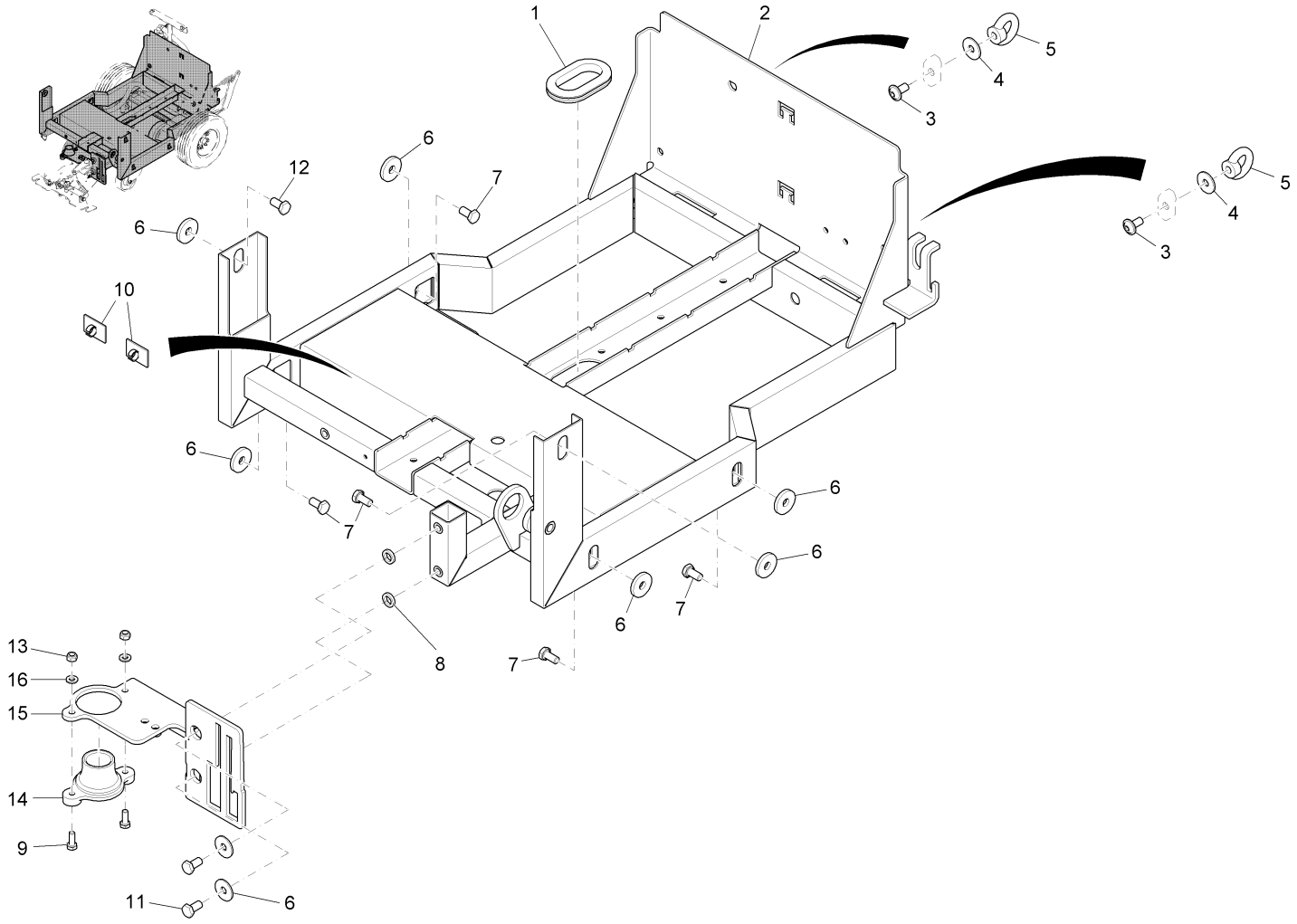

Phoenix 30 (99706234) Rev.00 18/01/08
99706234BT10 Chassis, Cpl. Part 1

Item	Spare part number	Description	Qty.	Remarks
1	01078440	Grommet	1	
2	03007640	Chassis	1	
3	01006820	Lens flange screw	2	
4	00042900	Washer	4	
5	01078450	Nut	2	
6	00047990	Disc wheel	10	
7	00053080	Hexagon screw	8	
8	01079670	Spacer sleeve	2	
9	00053020	Hexagon screw	2	
10	01143190	Cable clip	2	
11	00053100	Hexagon screw	2	
12	00553690	Hex.bolt	1	
13	00051520	Hexagon nut	2	
14	01077780	Bushing	1	
15	01079680	Sheet metal	1	
16	00053730	Washer	2	

Phoenix 30 (99706234) Rev.00 18/01/08
99706234BT20 Chassis, Cpl. Part 2

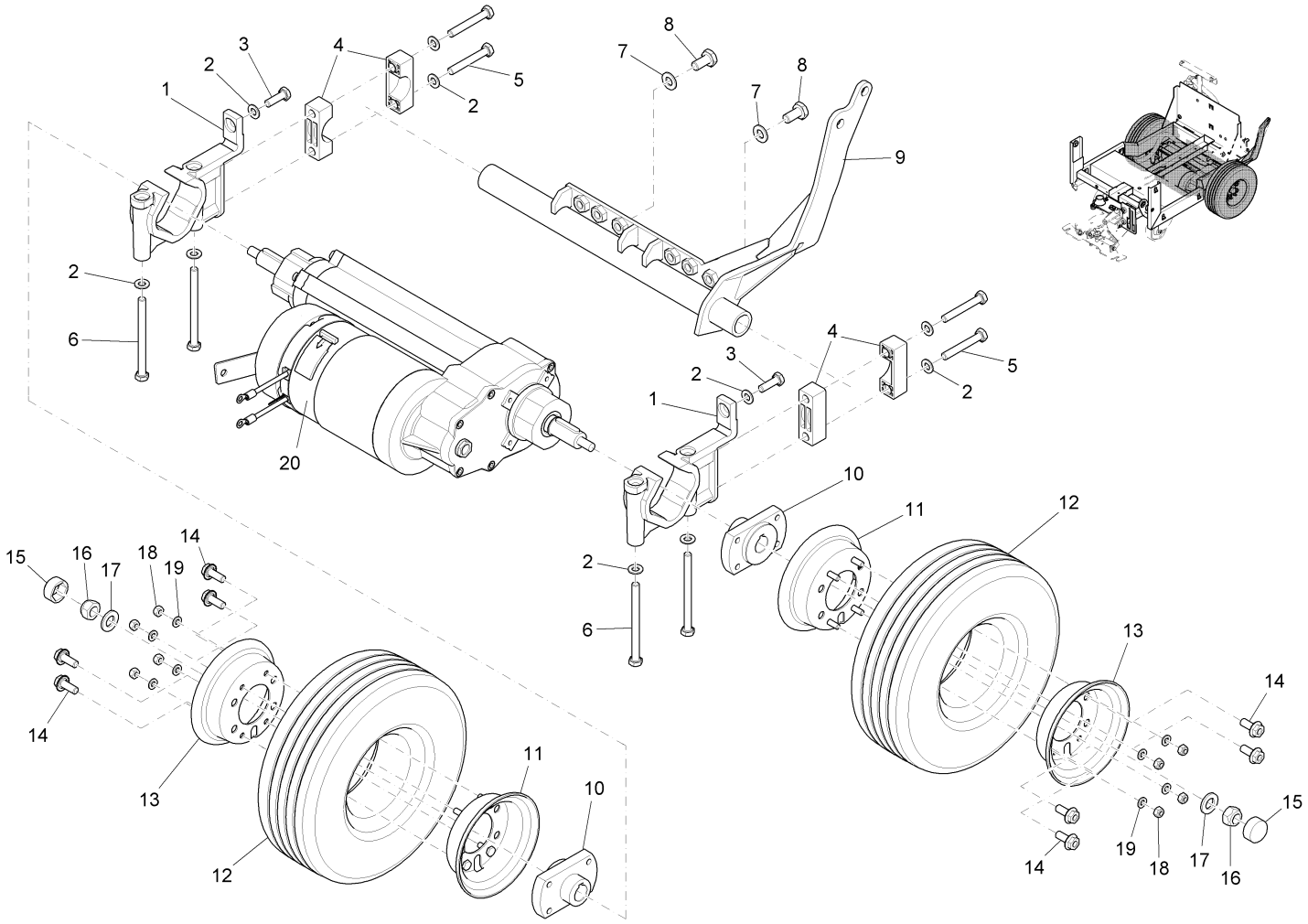

Phoenix 30 (99706234) Rev.00 18/01/08
99706234BT20 Chassis, Cpl. Part 2

Item	Spare part number	Description	Qty.	Remarks
1	01078480	Bearing AMER	2	
2	00053750	Washer	10	
3	00053100	Hexagon screw	1	
4	01078020	Block	4	
5	00053260	Hex.bolt	4	
6	00053140	Hex.bolt	4	
7	00053760	Washer	2	
8	00021130	Hex.bolt	2	
9	01078490	Lever	1	
10	01078010	Hub	2	
11	00621690	Rim half	2	
12	01056130	Tyre	2	Tire
13	00621710	Rim	2	
14	00959310	Hex.bolt	8	
15	01031540	protection cap	2	
16	00051490	Hexagon nut	2	
17	00053770	Washer	2	
18	00051520	Hexagon nut	8	
19	00053730	Washer	8	
20	01170350	Traction drive AMER Brake	1	

Phoenix 30 (99706234) Rev.00 18/01/08
01170350 Traction Drive Amer Brake

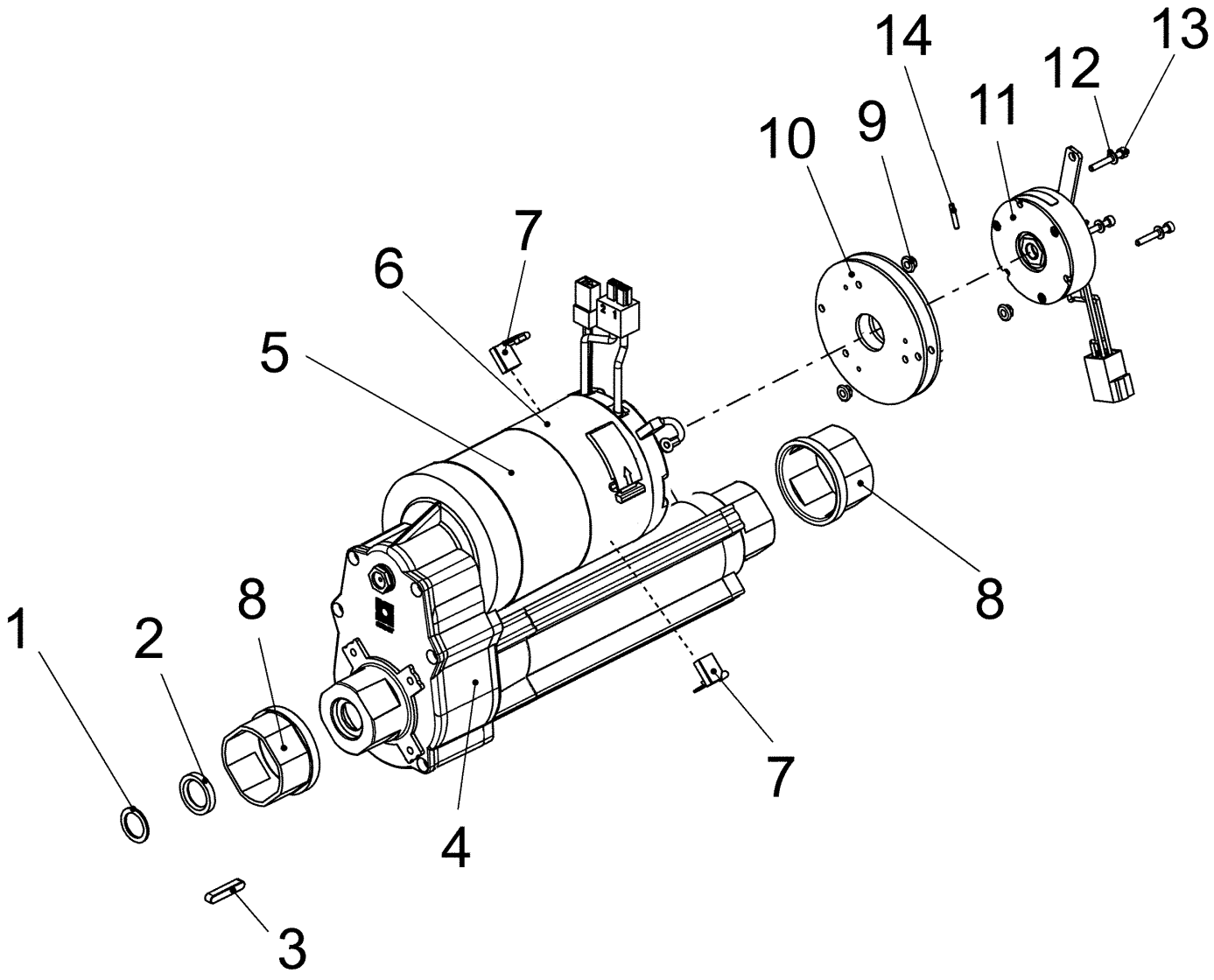

Phoenix 30 (99706234) Rev.00 18/01/08
01170350 Traction Drive Amer Brake

Item	Spare part number	Description	Qty.	Remarks
1	01077430	Washer	2	
2	01077420	Gasket	3	
3	01077410	Fitting key	2	woodruff key
4	01077390	Gear box with shaft	1	
5	01170920	Motor	1	
6	01077360	Covering	1	
7	01077350	Carbon brush	4	
8	01077400	Bushing	2	
9	01077380	Nut	4	
10	XXXXXXXX	Brake flange	2	PN Currently N/A
11	XXXXXXXX	Parking brake	1	PN Currently N/A
12	XXXXXXXX	Plain washer	3	PN Currently N/A
13	XXXXXXXX	Screw	3	PN Currently N/A
14	XXXXXXXX	Spring pin	1	PN Currently N/A

Phoenix 30 (99706234) Rev.00 18/01/08
99706234BT30 Chassis, Cpl. Part 3 - Suction Unit Connection

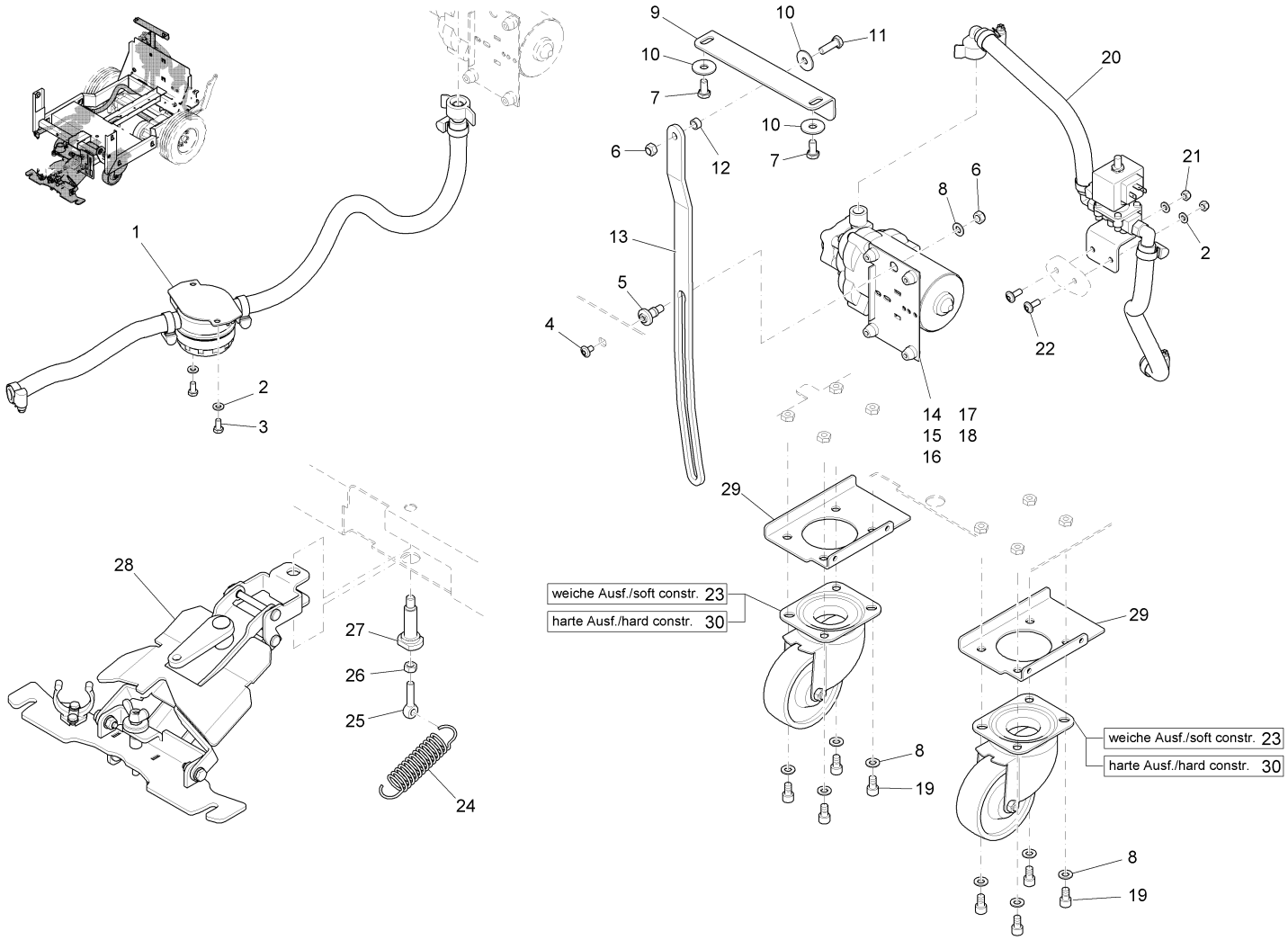

Phoenix 30 (99706234) Rev.00 18/01/08
99706234BT30 Chassis, Cpl. Part 3 - Suction Unit Connection

Item	Spare part number	Description	Qty.	Remarks
1	99706234BT30-1	Water supply	1	Do not order! See subassembly!
2	00053730	Washer	4	
3	00053010	Hex.bolt	2	
4	01072520	Lens flange screw	1	
5	01077820	Bushing	1	
6	00051510	Hexagon nut	2	
7	00053080	Hexagon screw	10	
8	00053750	Washer	9	
9	01077760	Retainer	1	
10	00042900	Washer	3	
11	00053100	Hexagon screw	2	
12	01077700	Bushing	1	
13	01170260	Sheet metal	1	
14	00543750	Pump	1	
15	00559670	Case	1	
16	00083640	Plastic cover	1	
17	00083650	Plastic cover	1	
18	00903190	Tab	1	
19	00103300	Socket head screw	8	
20	99706234BT30-2	Water supply	1	Do not order! See subassembly
21	00051520	Hexagon nut	2	
22	01017640	Lens flange screw	2	
23	01079660	Steering roller	2	Soft construction
24	01078150	Tension spring	1	
25	00735690	Eye bolt	1	
26	00046500	Hex. Nut	1	
27	01077830	Pivot	1	
28	03008100	Suction unit connection	1	Includes 03008100BT10 +03008100BT11
29	01170380	Sheet metal	2	
30	01079440	Steering roller	2	Hard construction

Phoenix 30 (99706234) Rev.00 18/01/08
99706234BT30-1 Water Supply Part 1

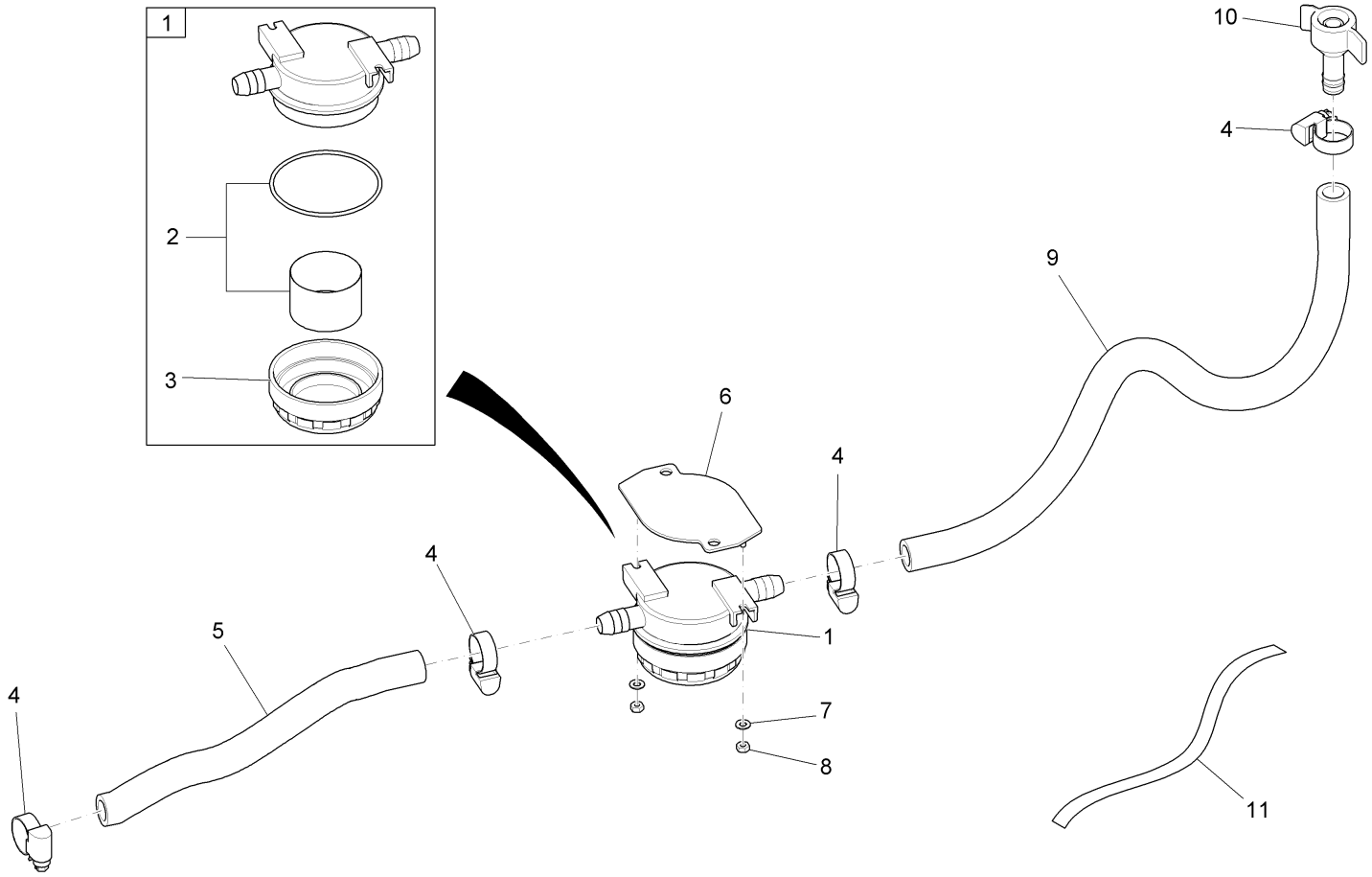

Phoenix 30 (99706234) Rev.00 18/01/08
99706234BT30-1 Water Supply Part 1

Item	Spare part number	Description	Qty.	Remarks
1	01077170	Water filter	1	
2	01079170	filter cartridge	1	cpl. with o-ring
3	XXXXXXXX	Filter cup	1	PN Currently N/A
4	01015350	Hose clamp	4	
5	00200170	PVC hose	300mm	11.81”
6	01078510	Sheet metal	1	
7	00053710	Washer	2	
8	00133830	Hex. Nut	2	
9	00200170	PVC hose	480mm	18.89”
10	01071450	Screwing	1	
11	03007630	Sealing band	1	

Phoenix 30 (99706234) Rev.00 18/01/08
99706234BT30-2 Water Supply

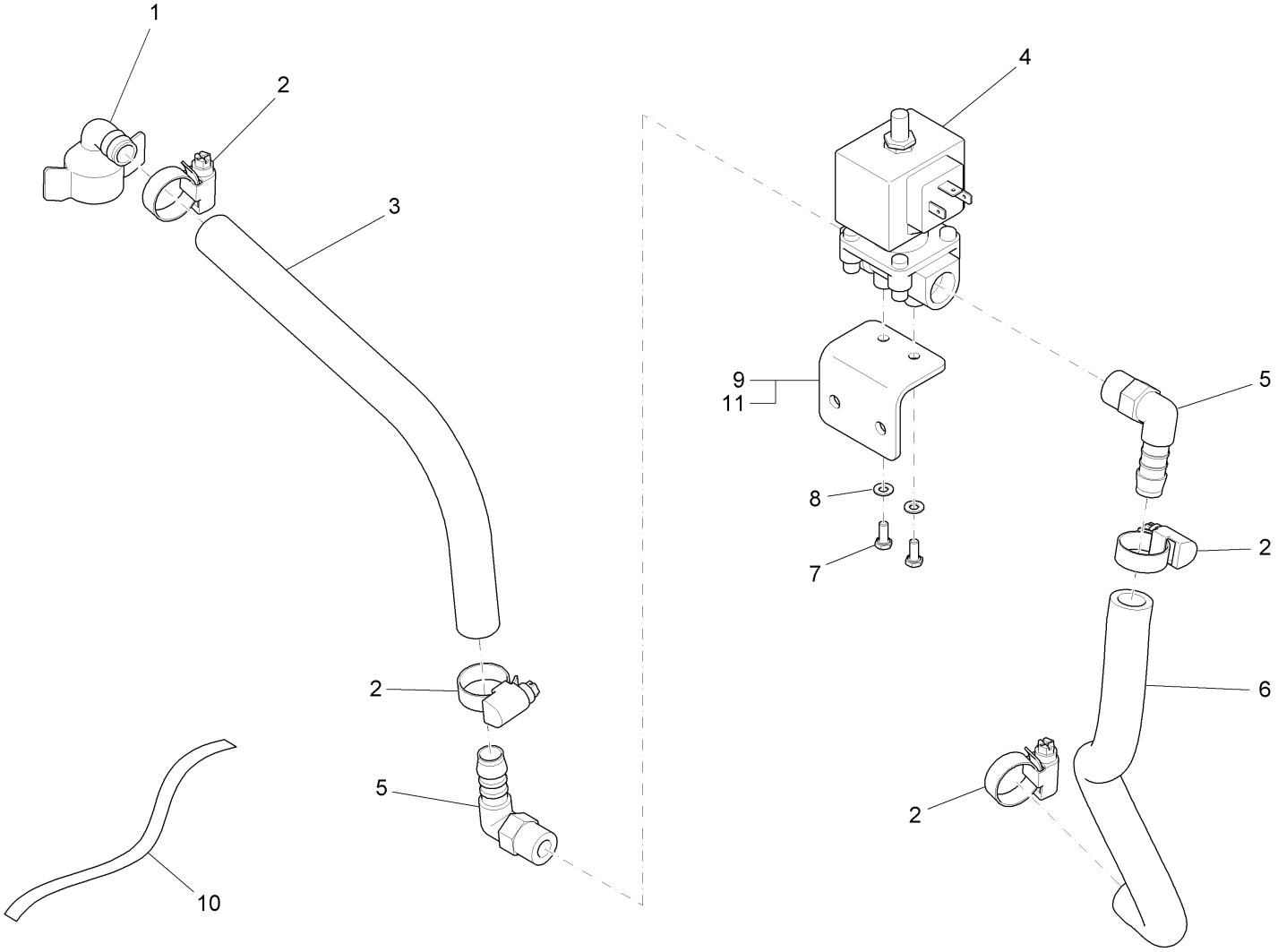

Phoenix 30 (99706234) Rev.00 18/01/08
99706234BT30-2 Water Supply

Item	Spare part number	Description	Qty.	Remarks
1	00154140	Screwed angle fitting	1	
2	01015350	Hose clamp	4	
3	00200170	PVC hose	1	
4	01071000	Electrovalve	1	
5	00020020	Angle socket	2	
6	00200170	PVC hose	1	
7	00058580	Hex.bolt	2	
8	00053710	Washer	2	
9	01170030	Retainer	1	
10	03007630	Sealing band	1	

Phoenix 30 (99706234) Rev.00 18/01/08
03008100BT10 Suction Unit Connection Part 1

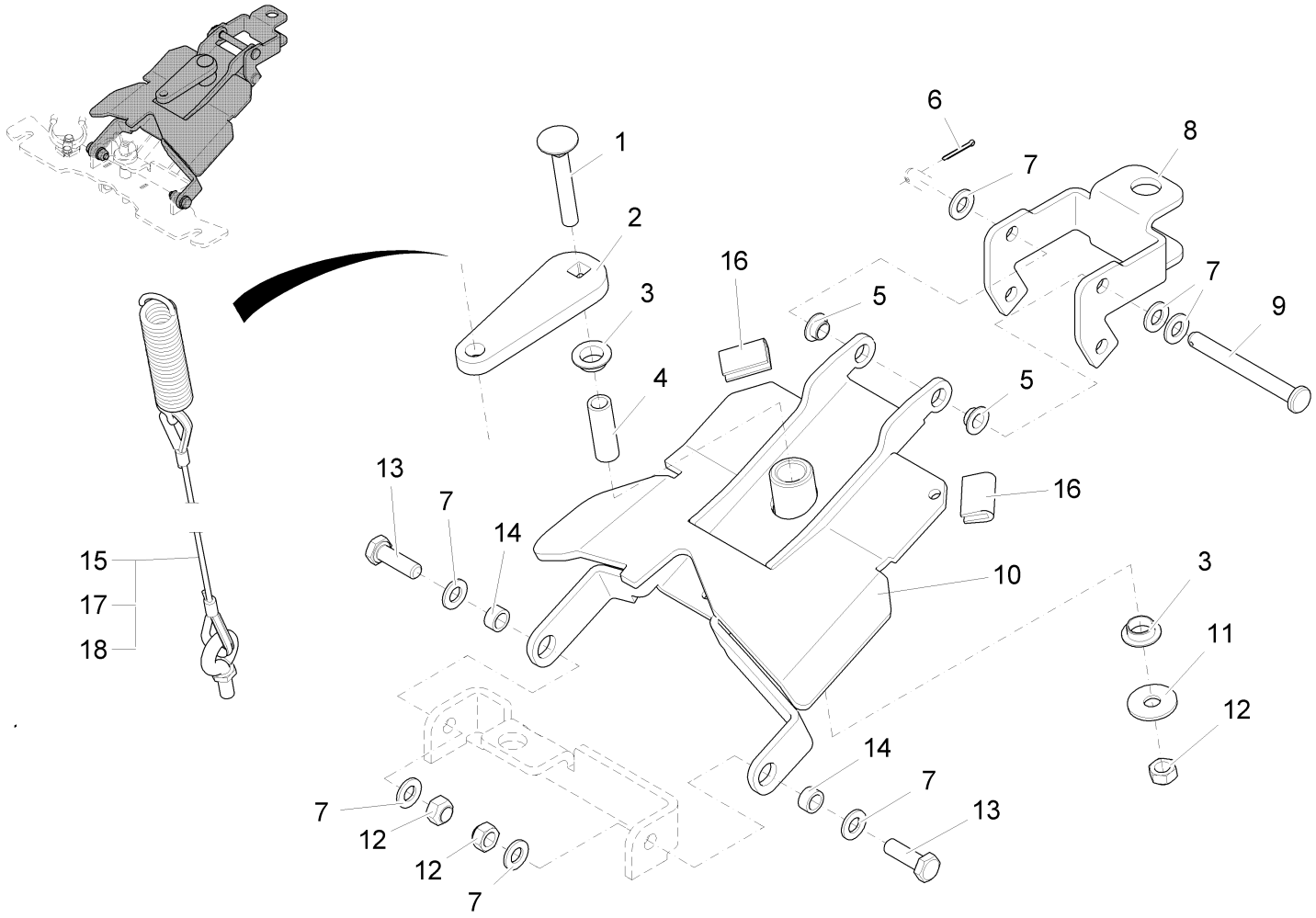

Phoenix 30 (99706234) Rev.00 18/01/08
03008100BT10 Suction Unit Connection Part 1

Item	Spare part number	Description	Qty.	Remarks
1	01130940	Cup head square neck bolt	1	
2	01170040	Sheet metal	1	
3	01077510	Slide bearing bush	2	
4	01170160	Pipe	1	
5	01078230	Slide bearing bush	2	
6	00054860	Cotter pin	1	
7	00053750	Washer	5	
8	01079280	Round part	1	
9	01078220	Bolt	1	
10	01079290	Sheet metal	1	
11	00042900	Washer	1	
12	00051510	Hexagon nut	3	
13	00053100	Hexagon screw	2	
14	01077700	Bushing	2	
15	01077980	Linkage	1	
16	00161240	Edge protection	1	
17	01170560	Linkage	1	
18	01170620	Linkage	1	with Phoenix 28 + 30

Phoenix 30 (99706234) Rev.00 18/01/08
03008100BT20 Suction Unit Connection Part 2

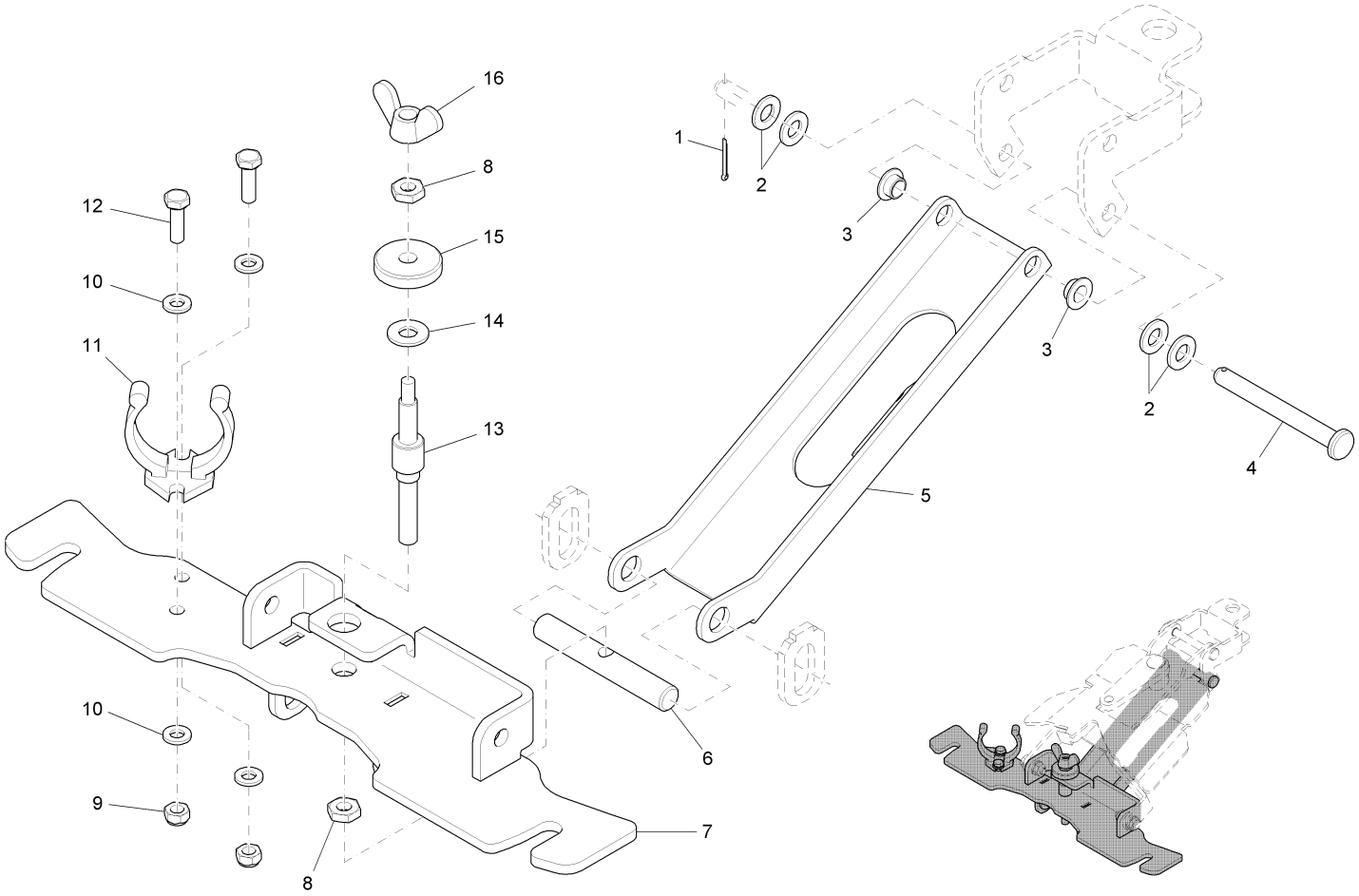

Phoenix 30 (99706234) Rev.00 18/01/08
03008100BT20 Suction Unit Connection Part 2

Item	Spare part number	Description	Qty.	Remarks
1	00054860	Cotter pin	1	
2	00053750	Washer	1	
3	01078230	Slide bearing bush	2	
4	01170050	Bolt	1	
5	01079320	Draft link	1	
6	01077680	Bolt	1	
7	01079330	Sheet metal	1	
8	00046500	Hex. Nut	2	
9	00051520	Hexagon nut	2	
10	00053730	Washer	4	
11	01078120	Hose support	1	
12	00053020	Hexagon screw	2	
13	01077850	Threaded pin	1	
14	00042900	Washer	1	
15	00051510	Hexagon nut	1	
16	00054020	Wing nut	1	
17	00053330	Hexagon nut	1	

Phoenix 30 (99706234) Rev.00 18/01/08
99706234BT40 Battery Tray

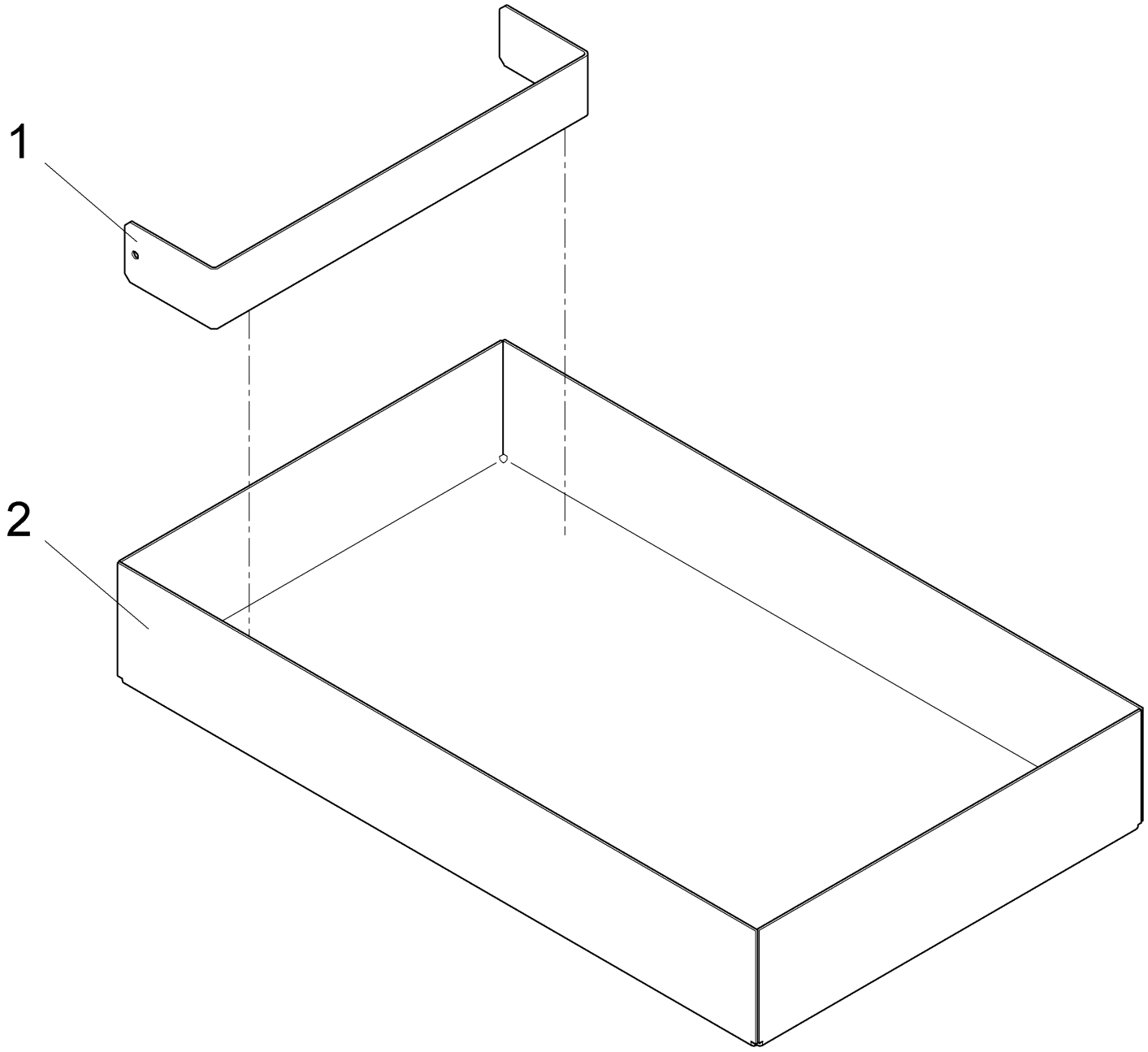

Phoenix 30 (99706234) Rev.00 18/01/08
99706234BT40 Battery Tray

Item	Spare part number	Description	Qty.	Remarks
1	01170760	Sheet metal	1	
2	03008190	Battery tray	1	

Phoenix 30 (99706234) Rev.00 18/01/08
99706234BT50 Hopper Cpl. Part1 - Lifting Disc Brush Hd.

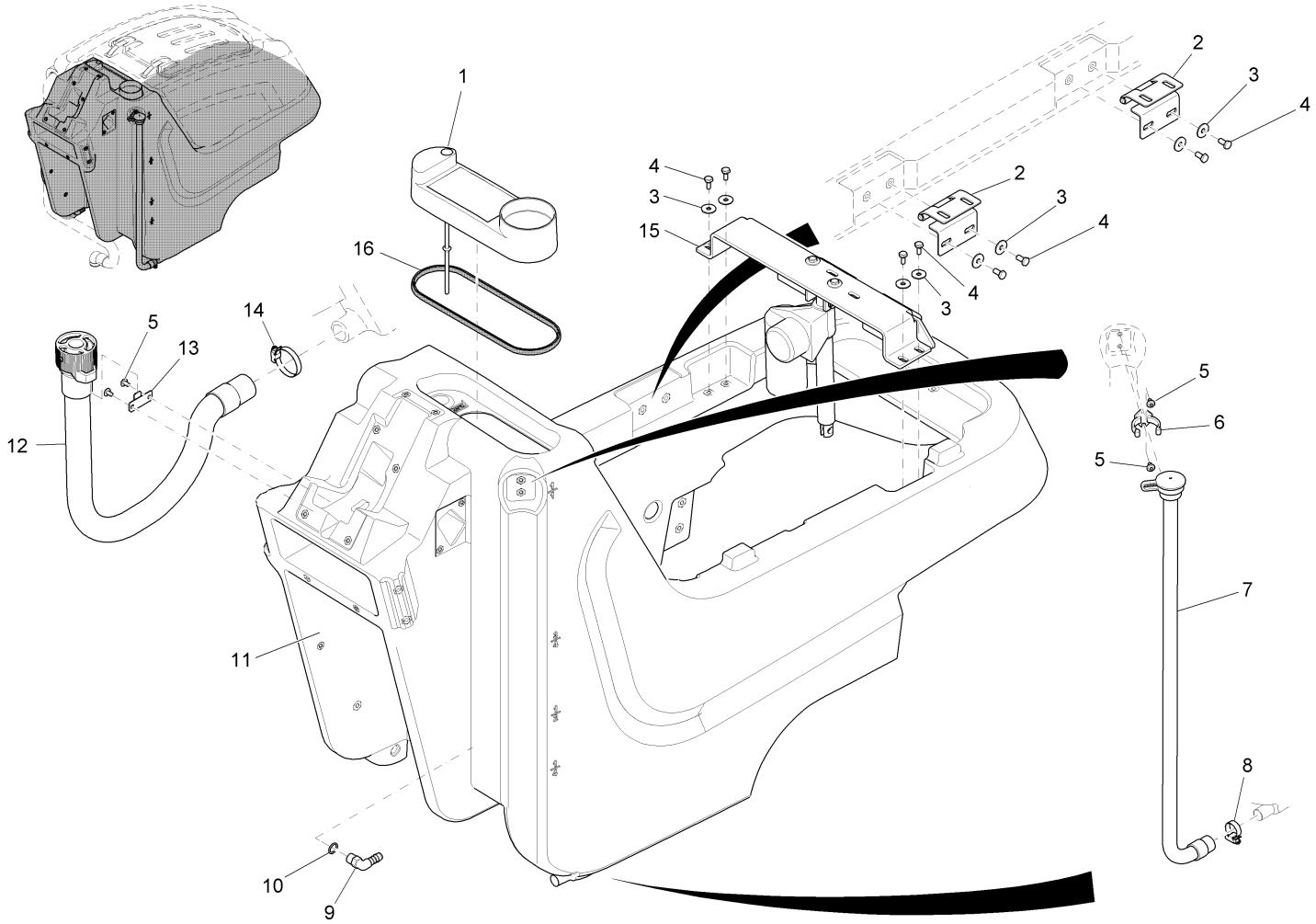

Phoenix 30 (99706234) Rev.00 18/01/08
99706234BT50 Hopper Cpl. Part1 - Lifting Disc Brush Hd.

Item	Spare part number	Description	Qty.	Remarks
1	01078100	Fresh water cap	1	
2	01078110	Hinge	2	
3	00047990	Disc wheel	4	
4	00053080	Hexagon screw	8	
5	01072520	Lens flange screw	4	
6	01078120	Hose support	1	
7	01170530	Hose	1	
8	01161690	Clamp	1	
9	00020020	Angle socket	1	
10	00057720	O-ring oil resistant	1	
11	01170360	Fresh water tank	1	
12	99706234BT50-1	Foul water hose cpl.	1	Do not order! see subassembly!
13	01077860	Hook	1	
14	00751160	Hose clamp	1	
15	99706234BT50-2	Lifting disc brush head	1	Do not order!see subassembly!
16	00721090	Edge protection	710mm	27.95”

Phoenix 30 (99706234) Rev.00 18/01/08
99706234BT50-1 Dirty Water Drain Hose Cpl..

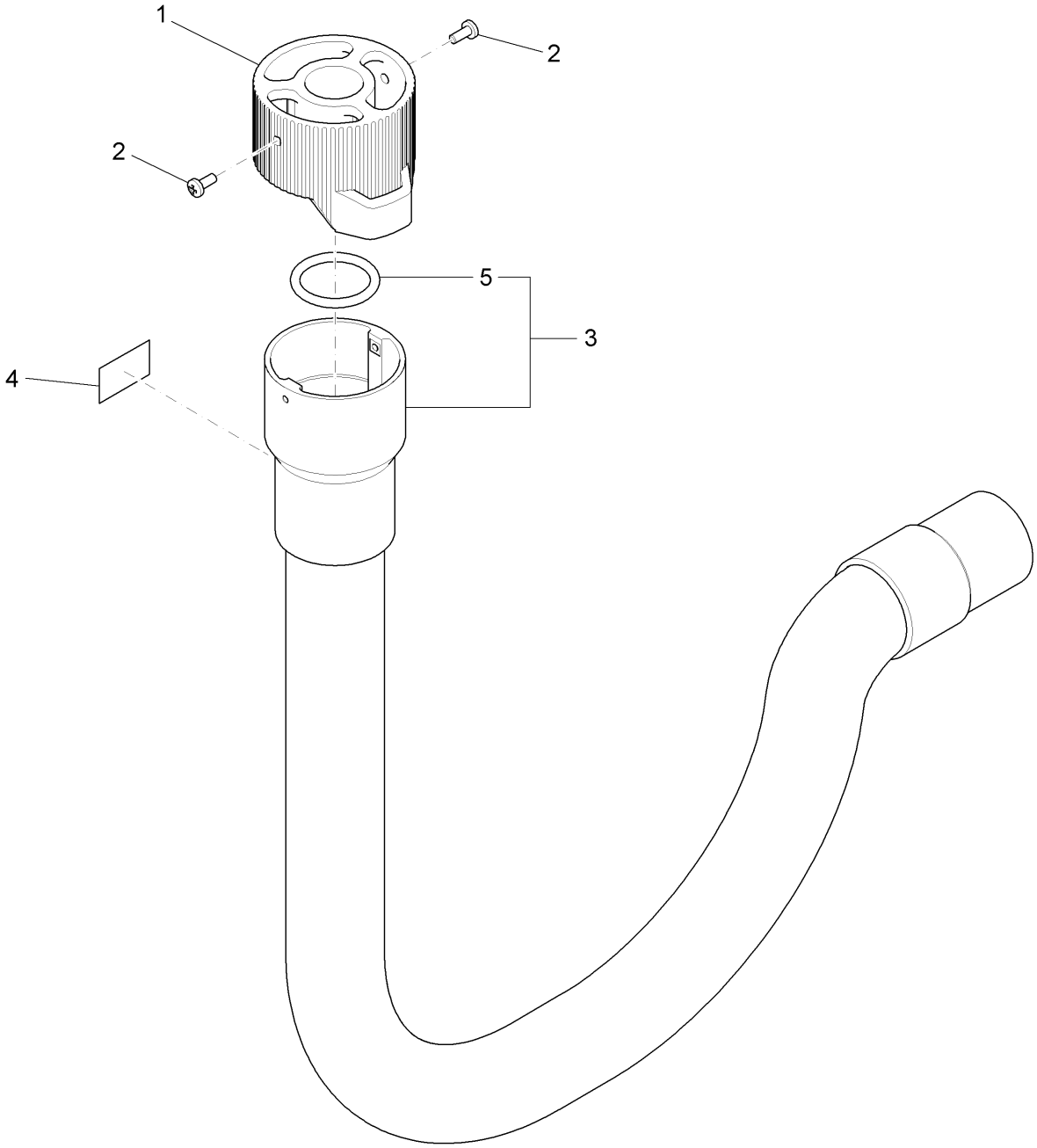

Phoenix 30 (99706234) Rev.00 18/01/08
99706234BT50-1 Dirty Water Drain Hose Cpl.

Item	Spare part number	Description	Qty.	Remarks
1	00906110	Cover	1	
2	00906100	Fillister-head screw	2	Phillips Screw
3	01077960	Dirty water drain hose	1	
4	01170060	Decal FOUL WATER	1	Dirty water decal
5	01079300	O-Ring	1	

Phoenix 30 (99706234) Rev.00 18/01/08
99706234BT50-2 Lifting Disc Brush Head

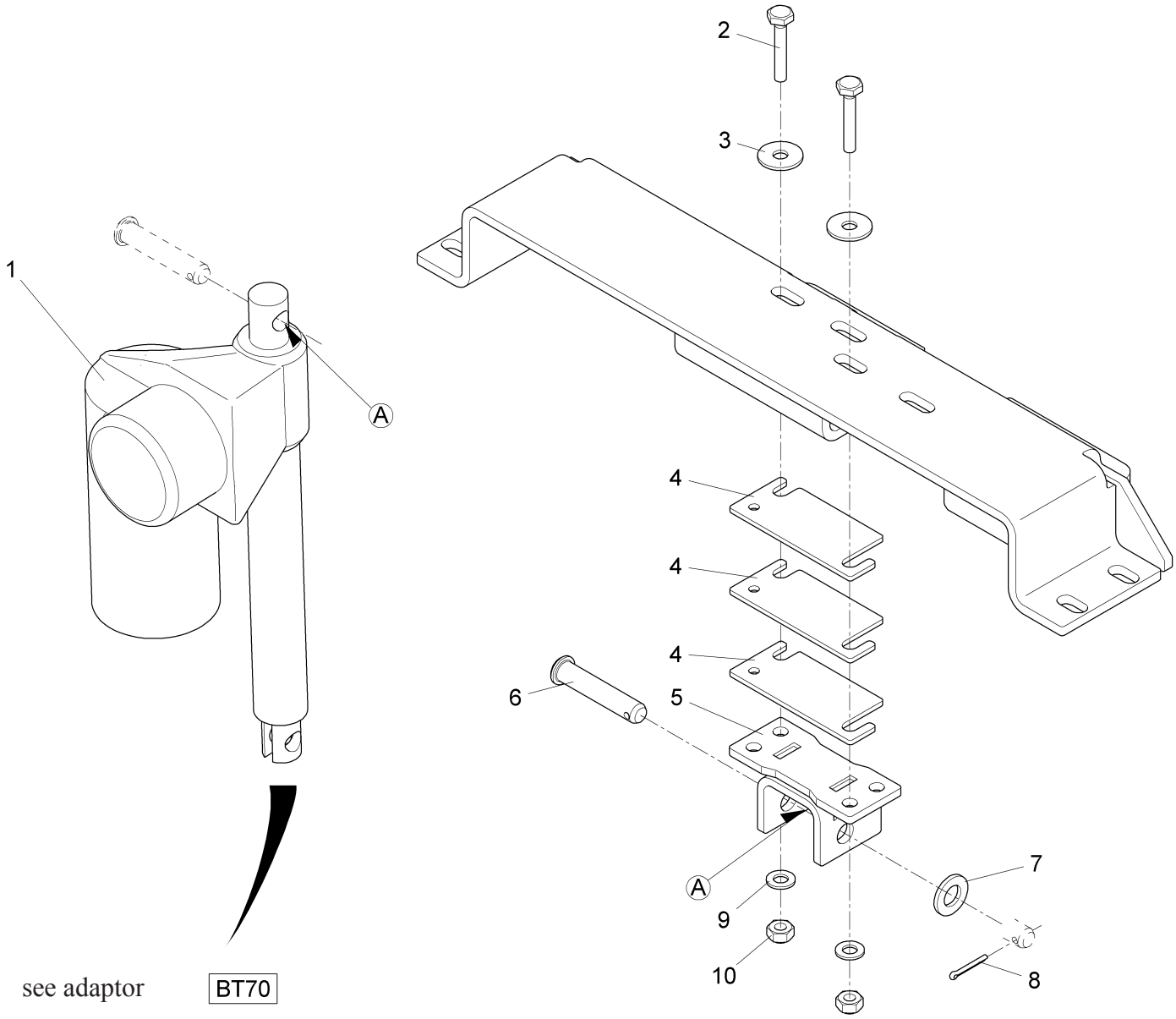

Phoenix 30 (99706234) Rev.00 18/01/08
99706234BT50-2 Lifting Disc Brush Head

Item	Spare part number	Description	Qty.	Remarks
1	01170430	Regulating motor	1	
2	00133700	Hexagon screw	2	
3	00042900	Washer	6	
4	01170710	Distance plate	3	
5	01170720	Attachment	1	
6	00872290	Bolt	1	
7	00053770	Washer	1	
8	00553580	Cotter pin	1	
9	00053750	Washer	2	
10	00051510	Hexagon nut	2	

Phoenix 30 (99706234) Rev.00 18/01/08
99706234BT60 Hopper Cpl. Part2

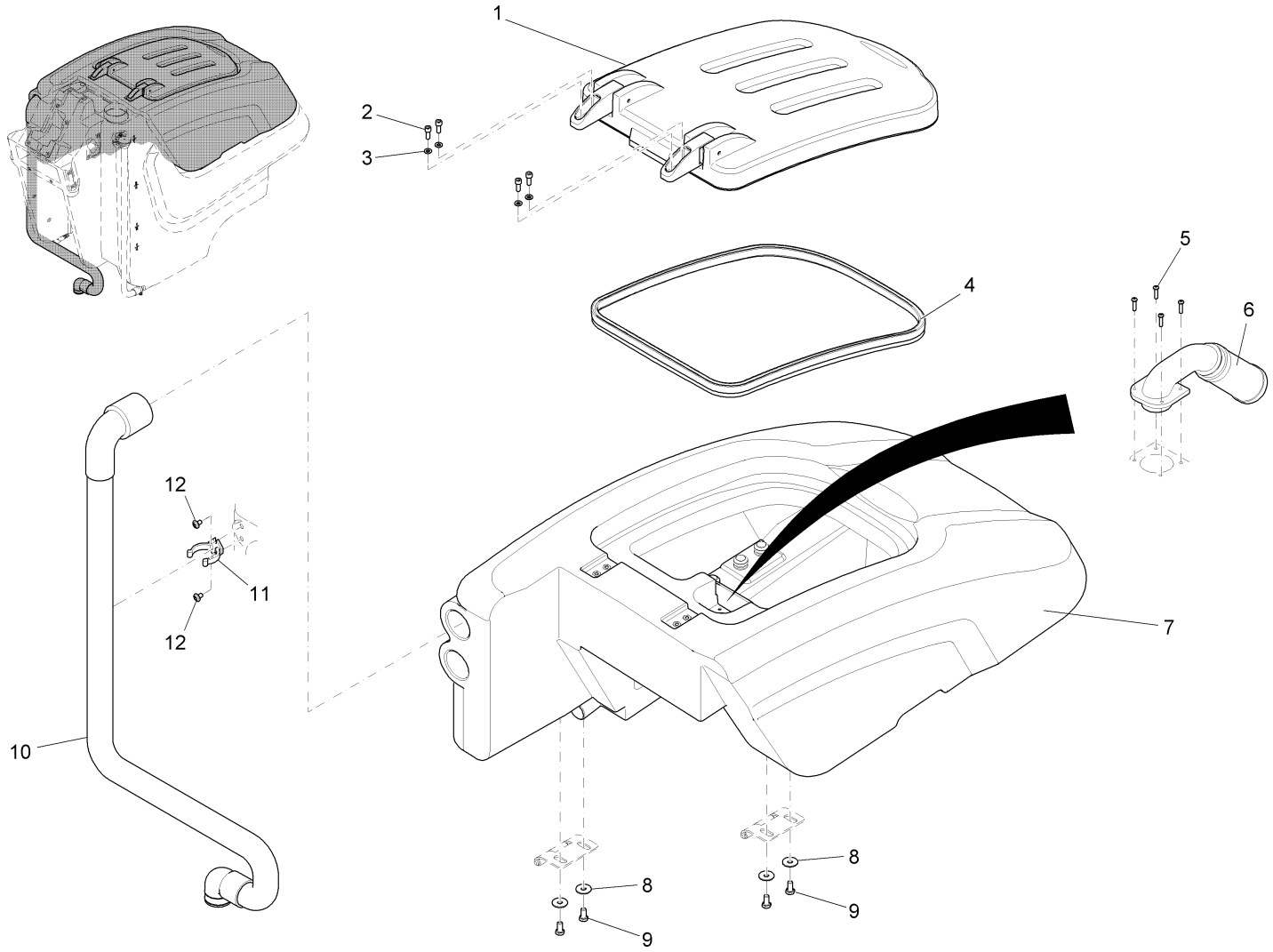

Phoenix 30 (99706234) Rev.00 18/01/08
99706234BT60 Hopper Cpl. Part2

Item	Spare part number	Description	Qty.	Remarks
1	01077990	Cover	1	
2	00136910	Cylinder head screw	4	
3	00053730	Washer	4	
4	01071770	Sealing profile	1	
5	01078160	Screw	4	
6	01078250	Filter unit	1	
7	01170370	Dirt container	1	Recovery tank
8	00047990	Disc wheel	4	
9	00053080	Hexagon screw	4	
10	01077920	Suction hose	1	
11	01078120	Hose support	1	
12	01072520	Lens flange screw	2	

Phoenix 30 (99706234) Rev.00 18/01/08
99706234BT70 Adapter Cylindrical Brush Head Lift

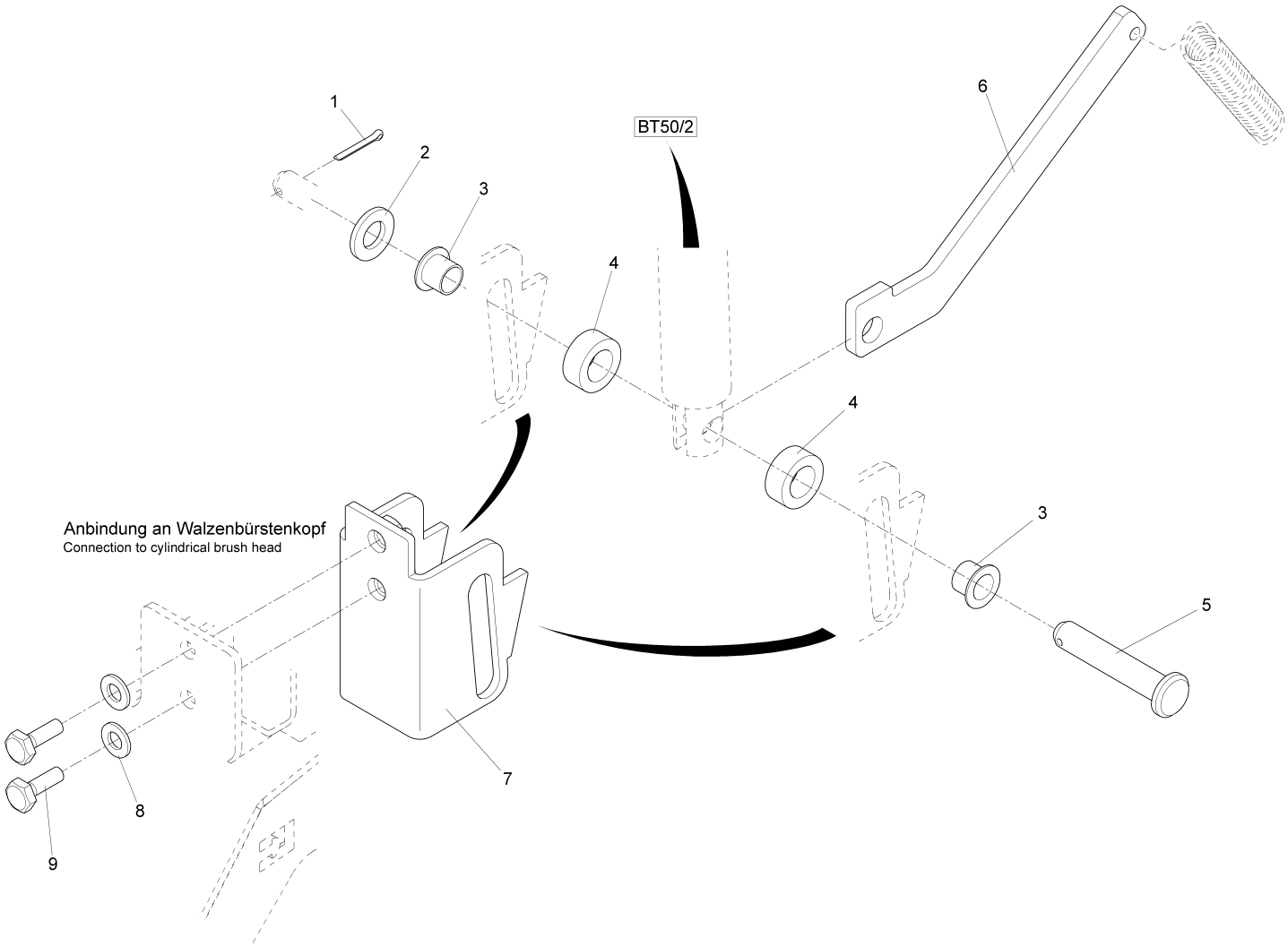

Phoenix 30 (99706234) Rev.00 18/01/08
99706234BT70 Adapter Cylindrical Brush Head Lift

Item	Spare part number	Description	Qty.	Remarks
1	00553580	Cotter pin	1	
2	00053770	Washer	1	
3	01071440	Plain bearing bush	2	
4	01170240	Bushing	2	
5	00851560	Bolt	1	
6	01170440	Lever	1	
7	01170590	Retainer	1	
8	00053750	Washer	2	
9	00053090	Hexagon screw	2	

Phoenix 30 (99706234) Rev.00 18/01/08
99706234BT80 Squeegee 110cm (43.30”) Part 1

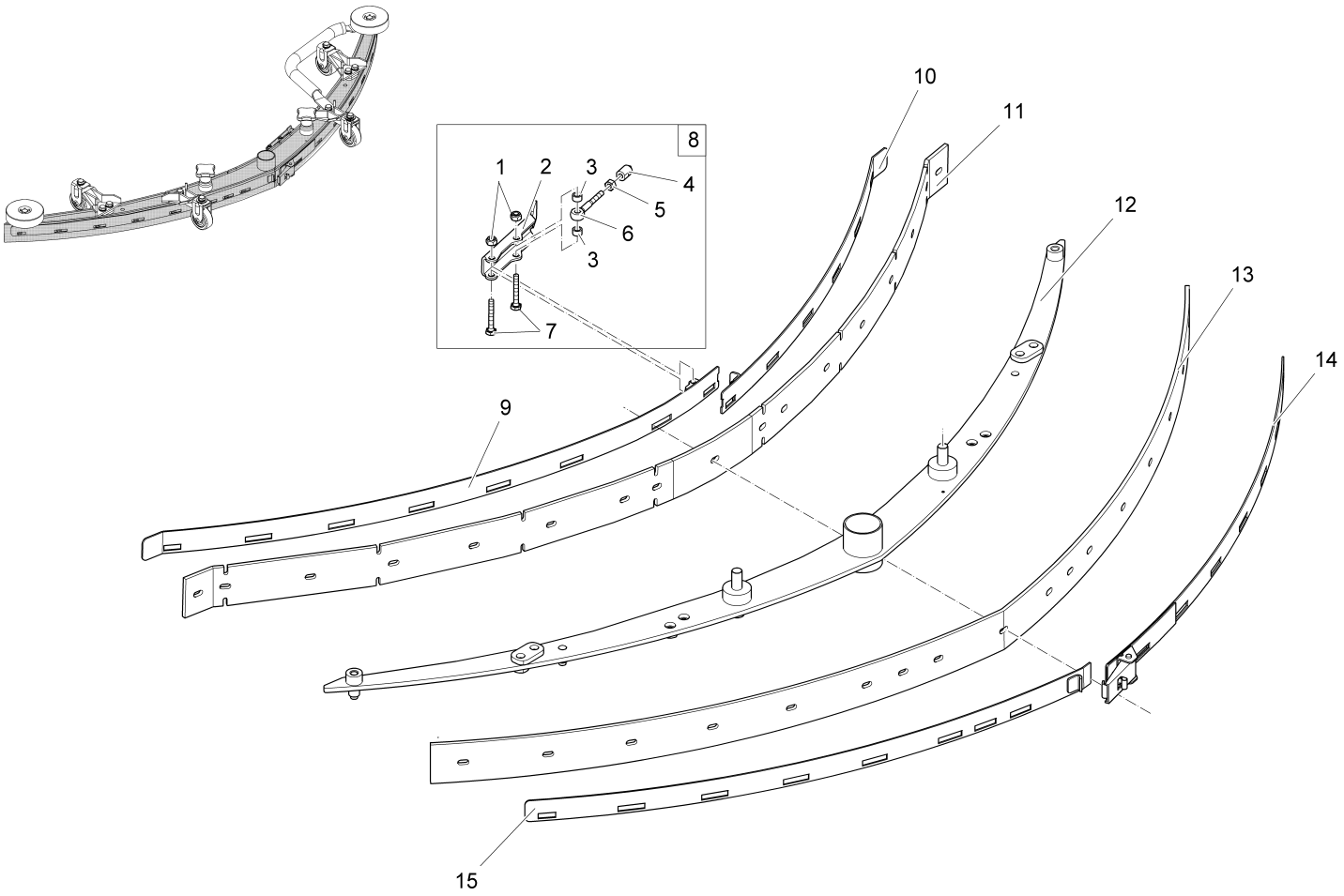

Phoenix 30 (99706234) Rev.00 18/01/08
99706234BT80 Squeegee 110cm (43.30”) Part 1

Item	Spare part number	Description	Qty.	Remarks
1	01017660	Hex. Nut	2	
2	01077580	Lever	1	
3	01077590	Bushing	2	
4	01078090	Pressure piece	1	
5	00902250	Hex. Nut	1	
6	01077500	Eye bolt	1	
7	01079890	Hexagon screw	2	
8	00009010	Lock suction unit	1	
9	01079880	Front tension band	1	
10	01079870	Front tension band	1	
11	01079790	Slot strip	1	Front blade
12	01079900	Suction unit 1110mm	1	
13	01079780	Sealing strip	1	Rear blade
14	01079910	Rear tension band	1	
15	01079920	Rear tension band	1	

Phoenix 30 (99706234) Rev.00 18/01/08
99706234BT90 Squeegee Cpl. Part 2

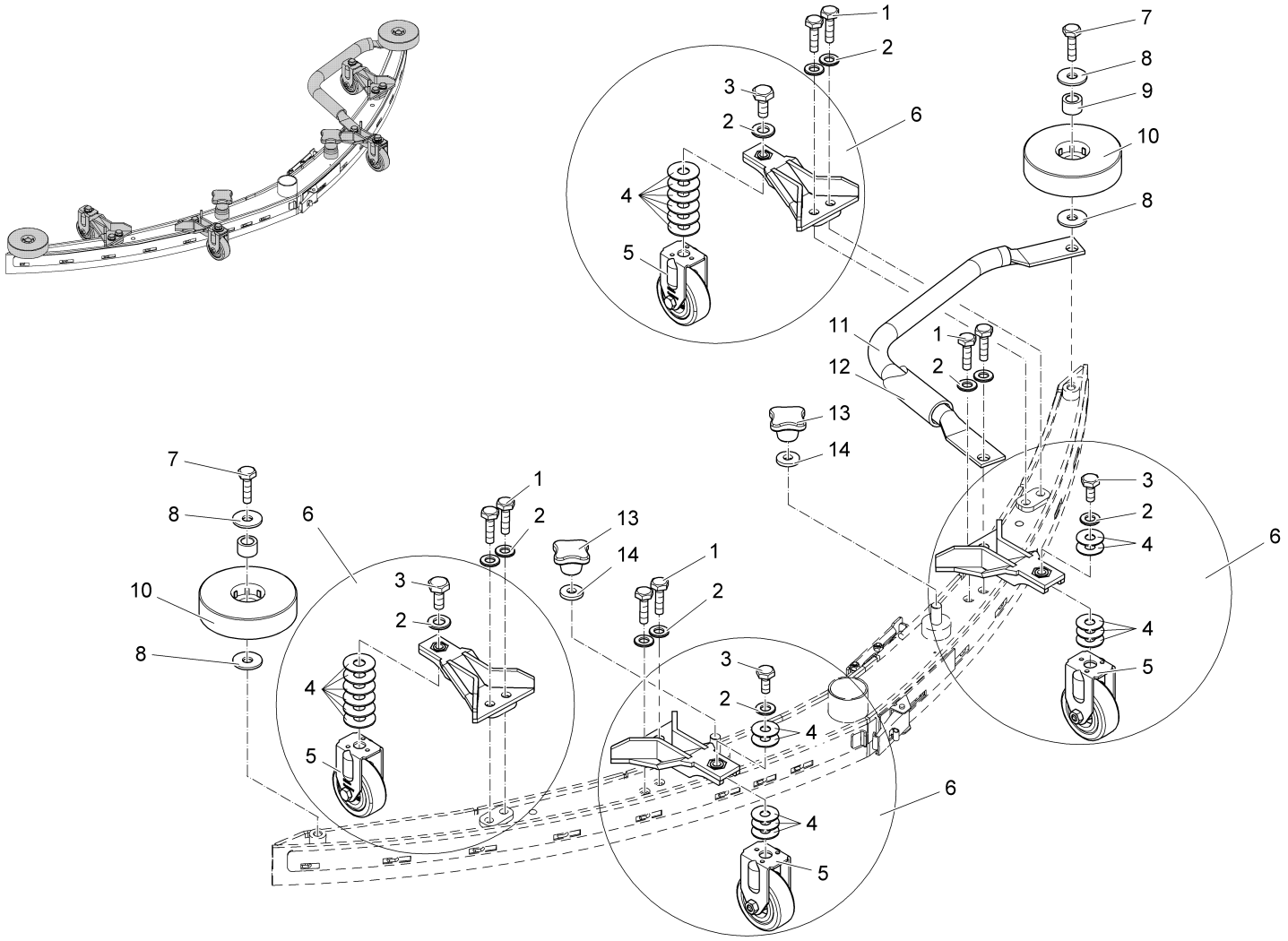

Phoenix 30 (99706234) Rev.00 18/01/08
99706234BT90 Squeegee Cpl. Part 2

Item	Spare part number	Description	Qty.	Remarks
1	01078690	Hexagon screw	4	
2	00101550	Washer	12	
3	01071740	Hex.bolt	4	
4	01079080	Spacer	22	
5	01077810	Fixed castor	4	
6	XXXXXXXX	97099121 Fixed castor	2	PN Currently N/A
7	01059530	Hexagon screw	2	
8	00902280	Washer	4	
9	00879030	Pipe	2	
10	00924810	Deflector roller	2	
11	01079930	Bracket	1	
12	00911270	Hose	305 mm	12.00”
13	00866720	Star handle	2	
14	00972060	Disc wheel	2	
15	01079070	Fixed castor	2	

Phoenix 30 (99706234) Rev.00 18/01/08
99706234BT100 Suction Vac Motor Assembly

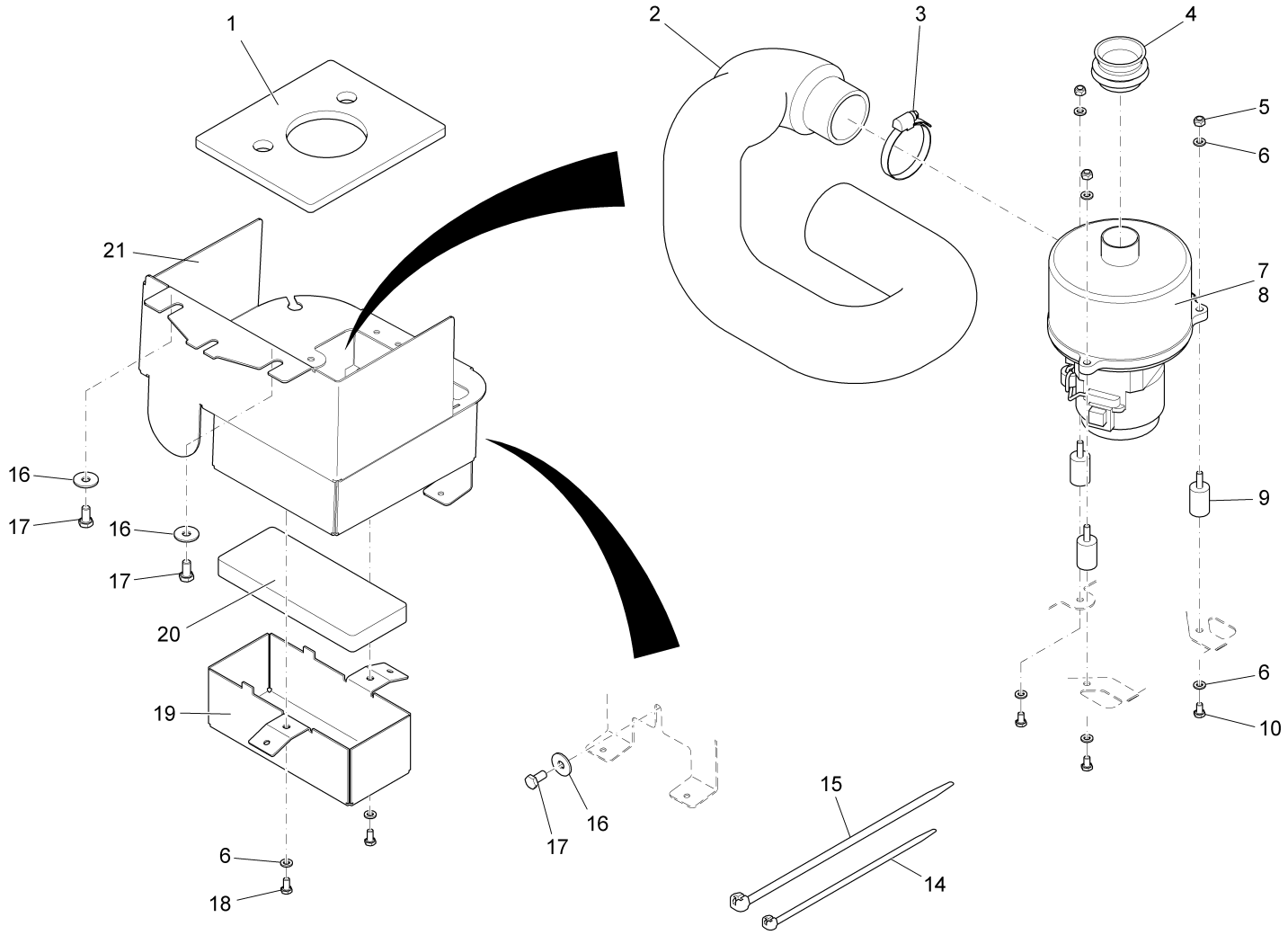

Phoenix 30 (99706234) Rev.00 18/01/08
99706234BT100 Suction Vac Motor Assembly

Item	Spare part number	Description	Qty.	Remarks
1	01079740	Insulation mat	1	
2	01077900	Hose	1	
3	00732130	Hose clamp	1	
4	01078180	Connection	1	
5	00051520	Hexagon nut	3	
6	00053730	Washer	8	
7	01079350	Suction motor	1	
8	01074610	Carbon brush	4	
9	01078190	Buffer	3	
10	00025260	Hexagon screw	3	
14	00121150	Cable tie	1	
15	00967760	Cable tie	4	
16	00042900	Washer	3	
17	00053080	Hexagon screw	3	
18	00104500	Hexagon screw	2	
19	01079750	Cover	1	
20	01079730	Insulation mat	1	
21	03007810	Sheet metal	1	

Phoenix 30 (99706234) Rev.00 18/01/08
99706234BT110 Squeegee Operation

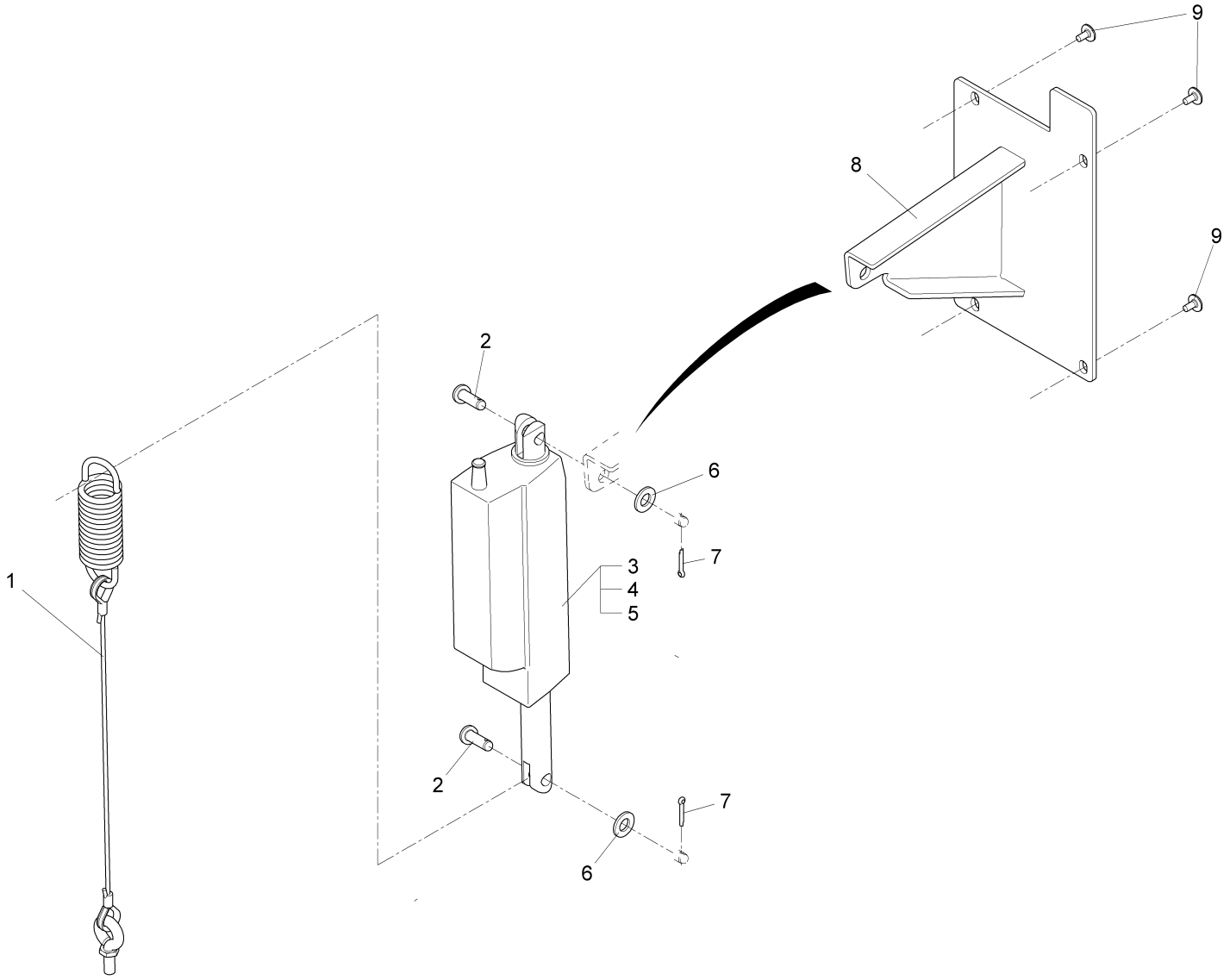

Phoenix 30 (99706234) Rev.00 18/01/08
99706234BT110 Squeegee Operation

Item	Spare part number	Description	Qty.	Remarks
1	01170620	Linkage	1	
2	00539260	Bolt	2	
3	00712430	Lifting element	1	
4	00903190	Tab	2	
5	00903180	Plastic cover	1	
6	00053760	Washer	2	
7	00551410	Cotter pin	2	
8	01170610	Support plate	1	
9	01072520	Lens flange screw	4	

Phoenix 30 (99706234) Rev.00 18/01/08
99706234BT120 Squeegee Lock

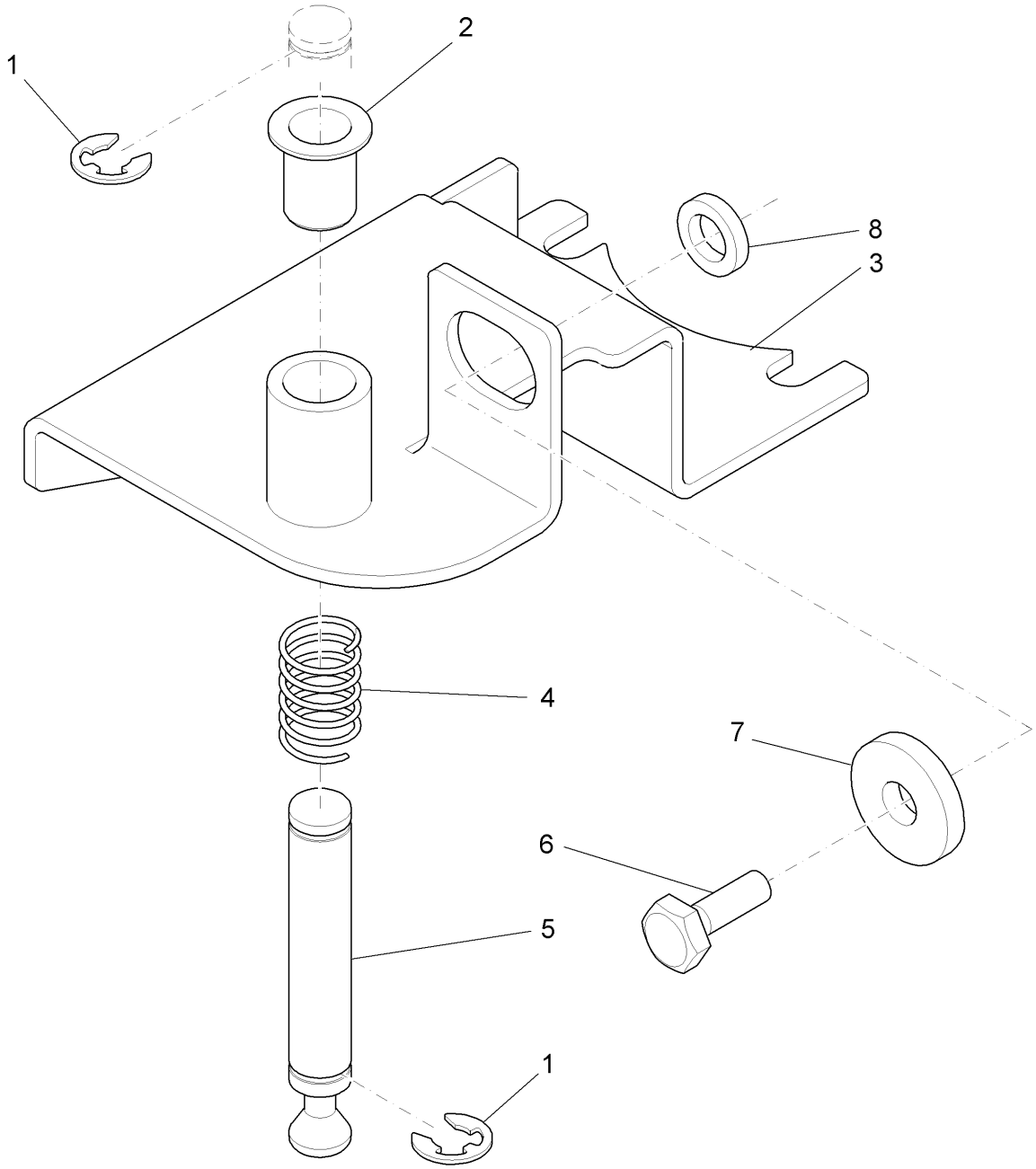

Phoenix 30 (99706234) Rev.00 18/01/08
99706234BT120 Squeegee Lock

Item	Spare part number	Description	Qty.	Remarks
1	00046280	Thrust washer	2	
2	00041400	Plain bearing bush	1	
3	01170730	Folding plate	1	
4	01170280	Cyl.compression spring	1	
5	01170270	Pin	1	
6	00053090	Hexagon screw	1	
7	00047990	Disk wheel	1	
8	01079670	Spacer sleeve	1	

Phoenix 28 (7062.33) + Phoenix 30 (7062.34) Rev.01 3/07/08
97099998 Operation Handle

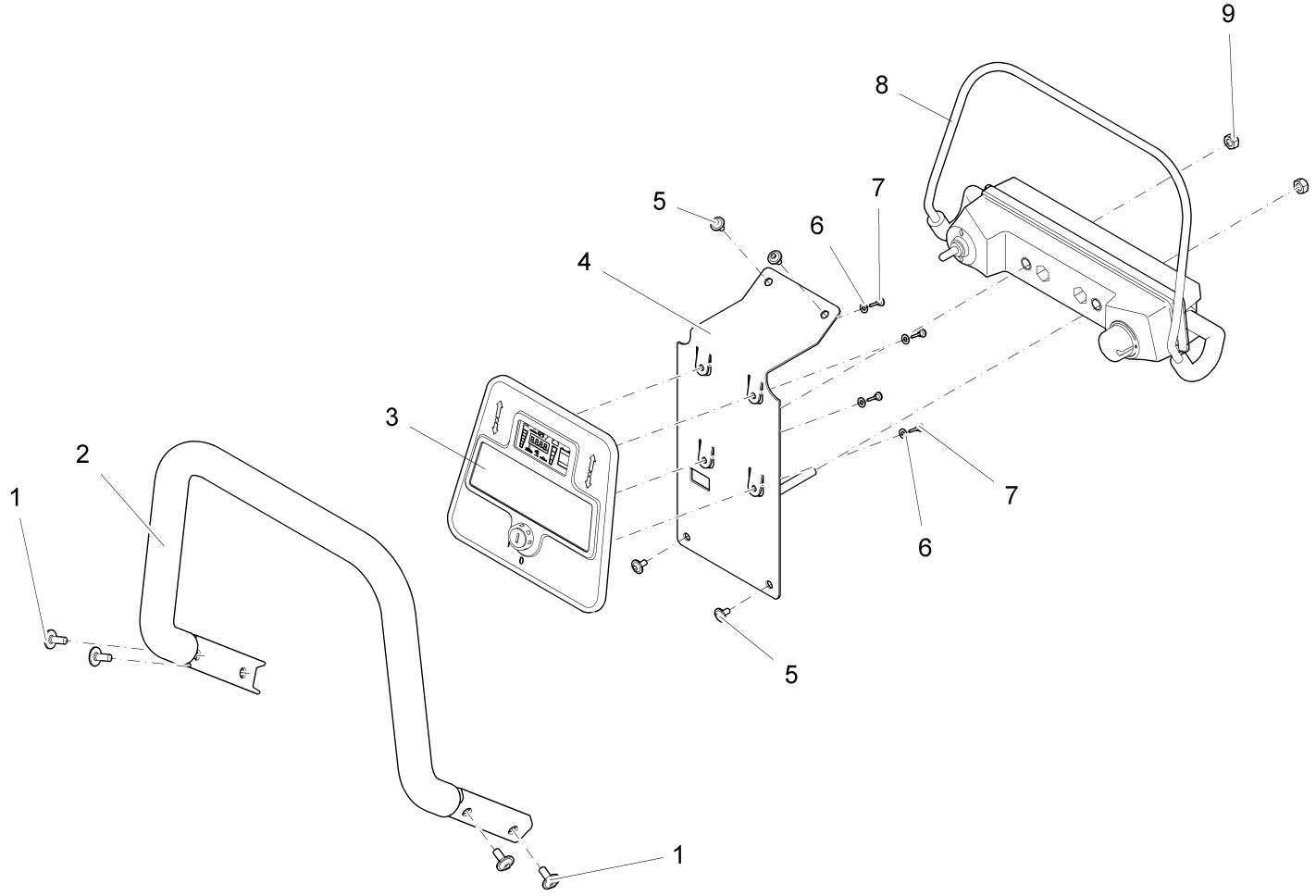

Phoenix 28 (7062.33) + Phoenix 30 (7062.34) Rev.01 3/07/08
97099998 Operation Handle

Item	Spare part number	Description	Qty.	Remarks
1	01074320	Lens flange screw	4	
2	01079760	Handle bar	1	
3	97093975	Console cpl.	1	Do not order! see .subassembly
4	01079770	Sheet metal	1	
5	01072520	Lens flange screw	4	
6	00874720	Washer	4	
7	00961490	Self tapping screw	4	
8	01079950	Bail system	1	
9	00051510	Hexagon nut	2	

Phoenix 28 (7062.33) + Phoenix 30 (7062.34) Rev.01 3/07/08
97093975 Console

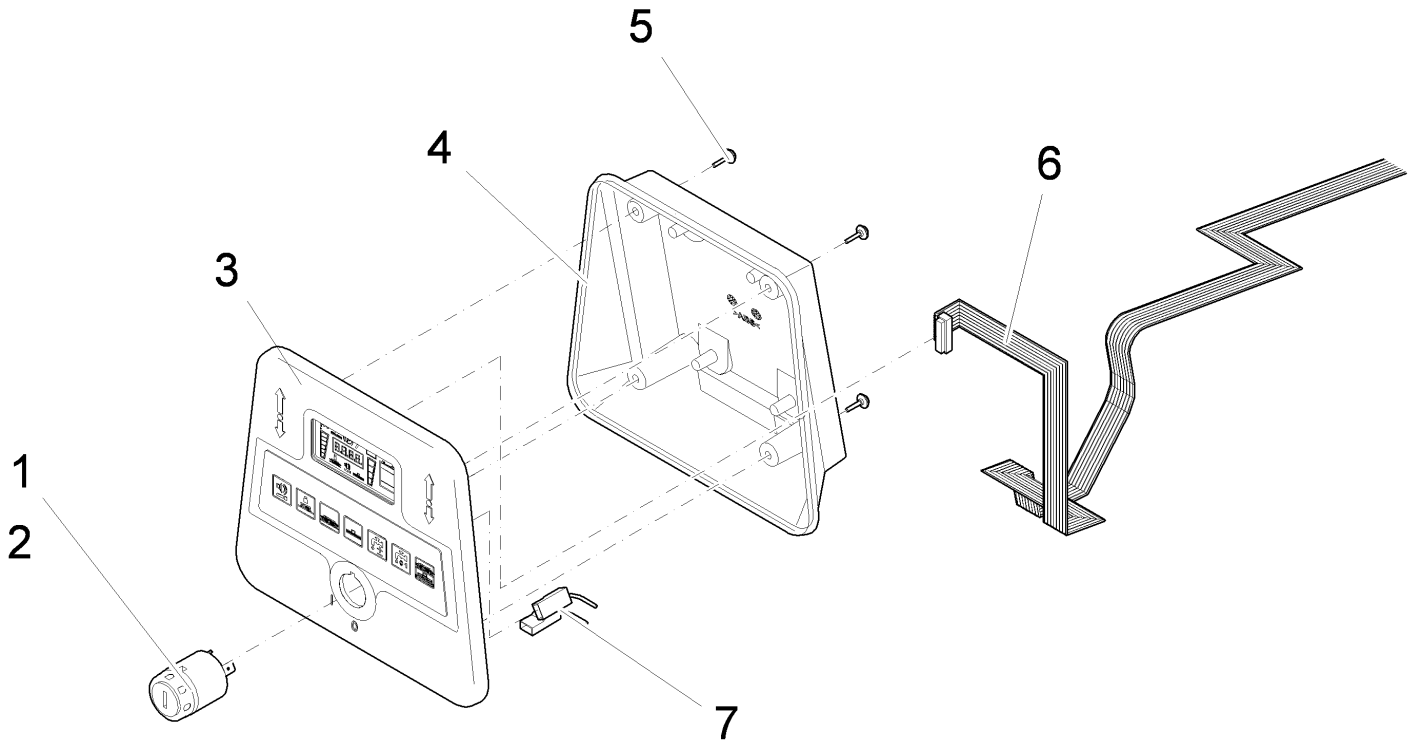

Phoenix 28 (7062.33) + Phoenix 30 (7062.34) Rev.01 3/07/08
97093975 Console

Item	Spare part number	Description	Qty.	Remarks
1	00021710	Key switch	1	
2	00745890	Set (2pc.) key	1	
3	01079230	Console	1	
4	01078940	Console	1	
5	01078860	Screw	4	
6	01078930	Ribbon cable	1	
7	01078950	Cable key switch	1	

Phoenix 30 (99706234) Rev.00 18/01/08
99706234BT140 Electric part 1

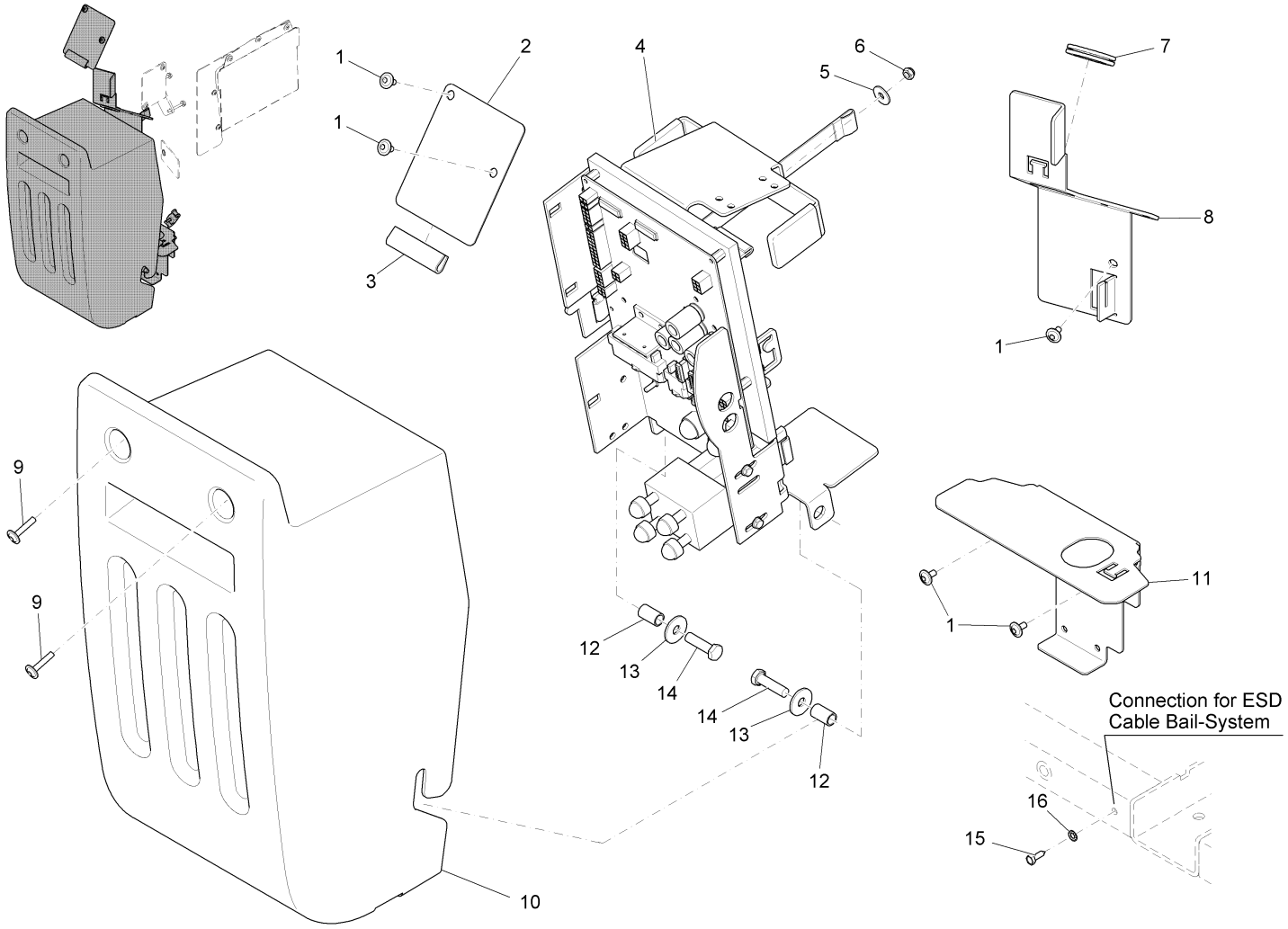

Phoenix 30 (99706234) Rev.00 18/01/08
99706234BT140 Electric part 1

Item	Spare part number	Description	Qty.	Remarks
1	01072520	Lens flange screw	5	
2	01078570	Sheet metal	1	
3	00161240	Edge protection	60mm	2.36”
4	99706234BT140-1	Retainer cpl.	1	Do not order! see subassembly
5	00153200	Washer	1	
6	00051520	Hexagon nut	1	
7	01079690	Bushing	1	
8	01078580	Sheet metal	1	
9	01082530	Lens flange screw	2	
10	01078270	Covering	1	
11	01078590	Clamping plate	1	
12	01078260	Bushing	2	
13	00042900	Washer	2	
14	00053110	Hexagon screw	2	
15	01073850	Tapping screw	1	
16	00857150	Lock washer	1	

Phoenix 30 (99706234) Rev.00 18/01/08
99706234BT140-1 Retainer, Cpl.

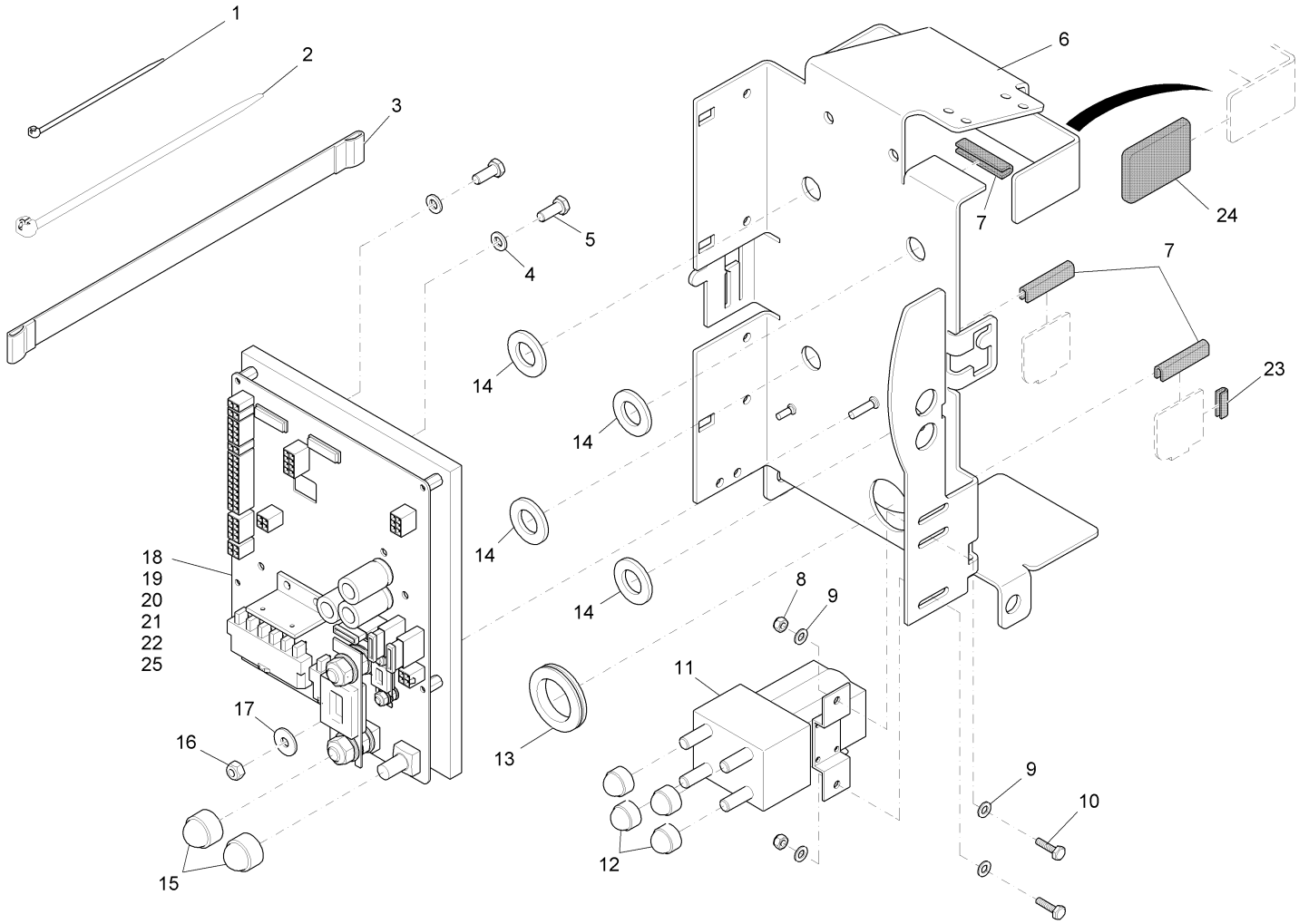

Phoenix 30 (99706234) Rev.00 18/01/08
99706234BT140-1 Retainer, Cpl.

Item	Spare part number	Description	Qty.	Remarks
1	00967760	Cable tie	2	
2	00121150	Cable tie	10	
3	01077880	Webbing	1	
4	00053730	Washer	2	
5	00053010	Hex.bolt	2	
6	01078640	Retainer	1	
7	00721090	Edge protection	120mm	4.72”
8	00051340	Hexagon nut	2	
9	00053720	Washer	4	
10	00054410	Hex.bolt	2	
11	01170460	Contactor	1	
12	00131610	Lens cap	4	
13	01079690	Bushing	1	
14	01078240	Washer	4	
15	00747210	Lens cap	2	
16	00051520	Hexagon nut	1	
17	00135120	Washer	1	
18	01079220	Controller	1	
19	00059580	Fuse	1	
20	00902440	Strip fuse	1	
21	00733630	Fuse	1	
22	00972430	Fuse	1	
23	00721090	Edge protection	30mm	1.18”
24	01074240	Cap	2	
25	00906120	Fuse	1	

Phoenix 30 (99706234) Rev.00 18/01/08
99706234BT150 Electric Part 2

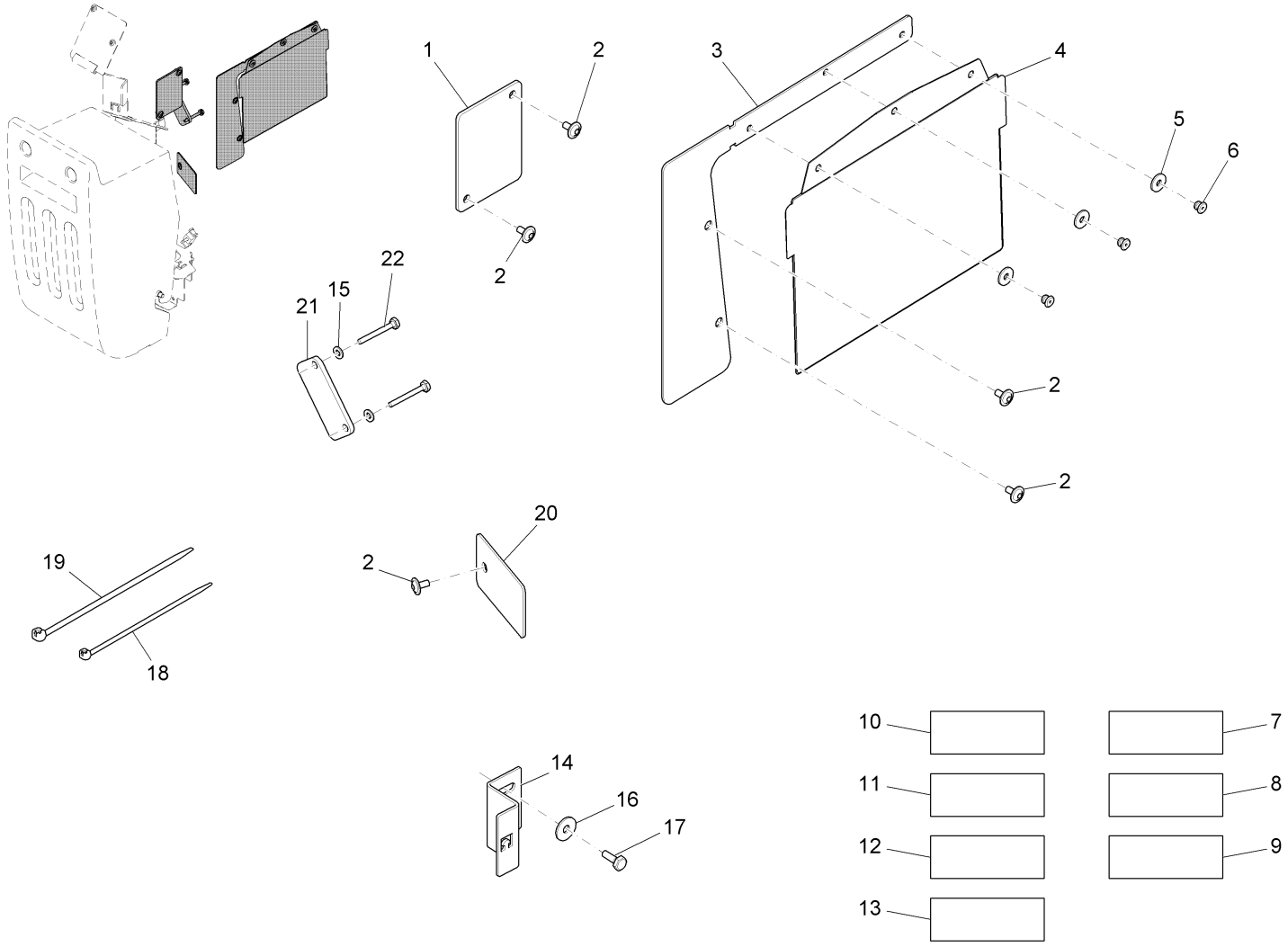

Phoenix 30 (99706234) Rev.00 18/01/08
99706234BT150 Electric Part 2

Item	Spare part number	Description	Qty.	Remarks
1	01078600	Covering	1	
2	01072520	Lens flange screw	7	
3	01078610	Sheet metal	1	
4	01078280	Bag	1	
5	00555520	Washer	3	
6	01078290	Blind rivet	3	
7	03008120	Wiring harness W1	1	
8	03008130	Wiring harness W2	1	
9	03008530	Wiring harness W3	1	
10	03008150	Wiring harness W9	1	
11	03008160	Wiring harness W11	1	
12	03008170	Cable loom	1	
13	03008180	Cable loom	1	
14	01170450	Clamping plate	1	
15	00053730	Washer	2	
16	00042900	Washer	1	
17	00053090	Hexagon screw	1	
18	00121150	Cable tie	13	
19	00967760	Cable tie	14	
20	01078630	Sheet metal	1	
21	01170500	Distance plate	1	
22	00535110	Hex.bolt	2	

Phoenix 30 (99706234) Rev.00 18/01/08
99706234BT160 Battery Charger 24V 22A

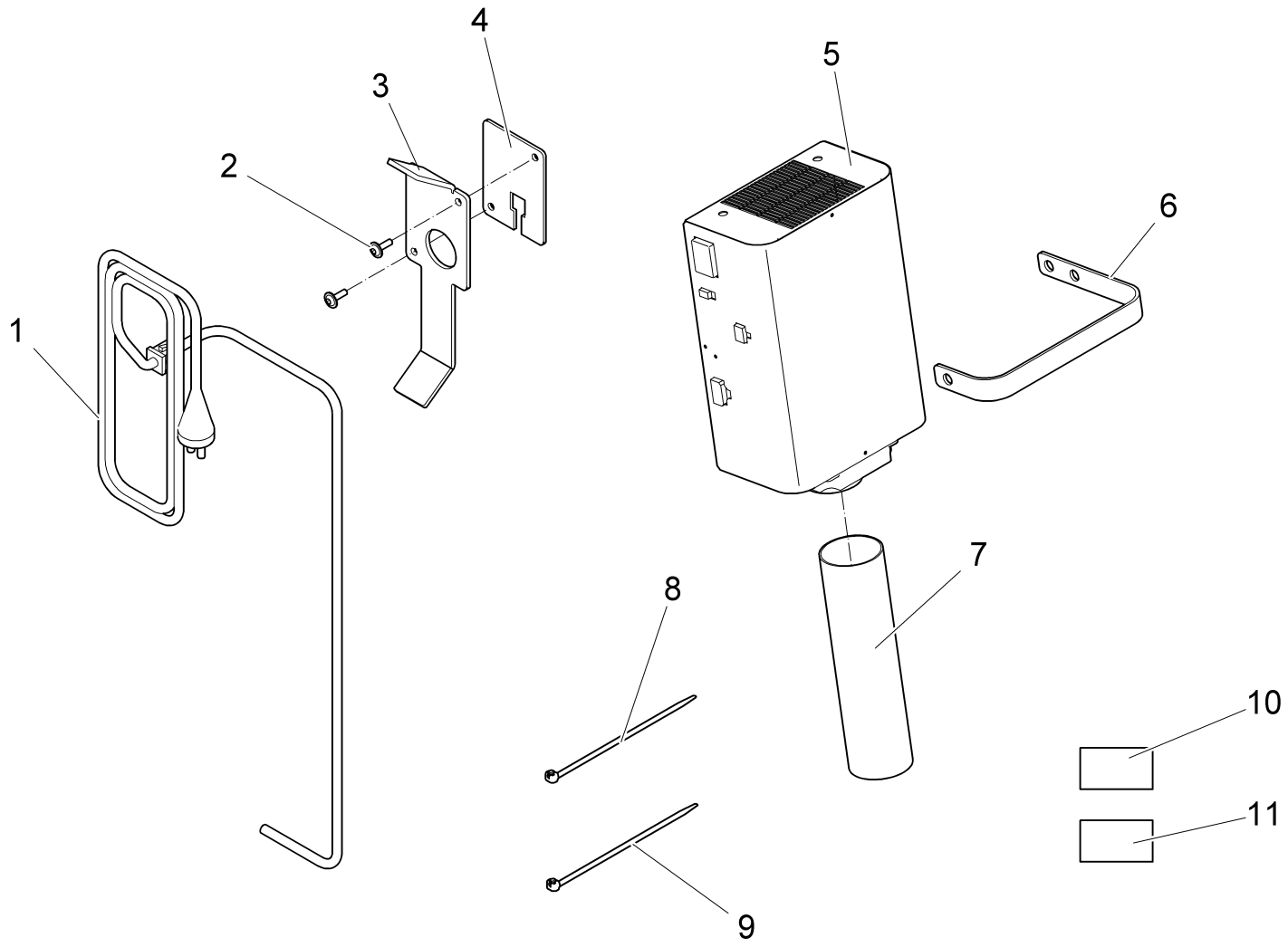

Phoenix 30 (99706234) Rev.00 18/01/08
99706234BT160 Battery Charger 24V 22A

Item	Spare part number	Description	Qty.	Remarks
1	01079380	Power cable	1	
2	01017640	Lens flange screw	2	
3	01074240	Cap	2	Apply Loctite on pos.12!
4	01079360	Covering	1	
5	01079370	On-board charger	1	
6	01077870	Tension band	1	
7	01078320	Hose	3	
8	00121150	Cable tie	8	
9	00967760	Cable tie	1	
10	03006770	Wire harness W6	1	
11	03006840	Wiring harness W8	1	
12	01079390	Cable retainer	1	

Phoenix 30 (99706234) Rev.00 18/01/08
99706234BT170 Decals

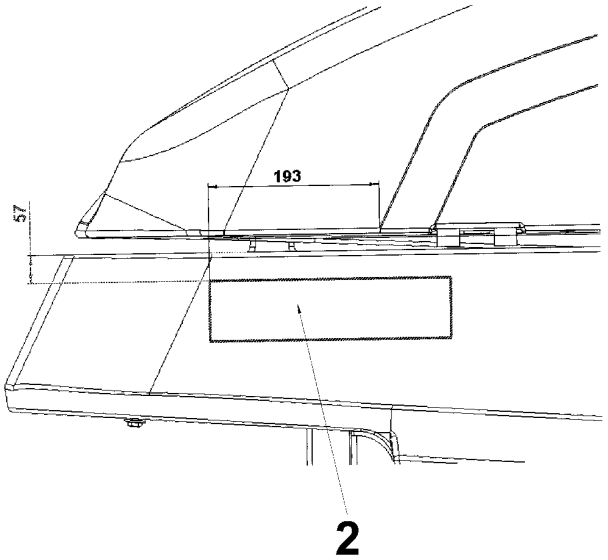

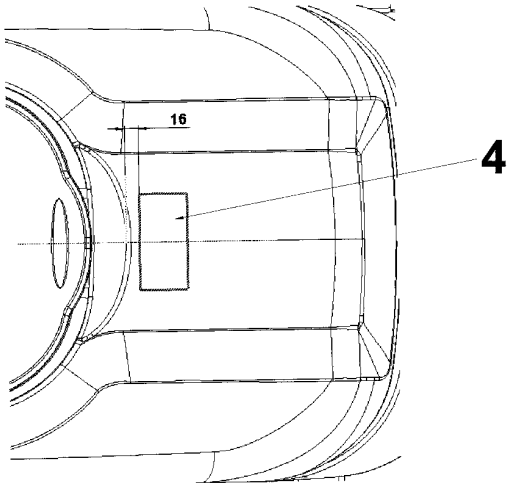

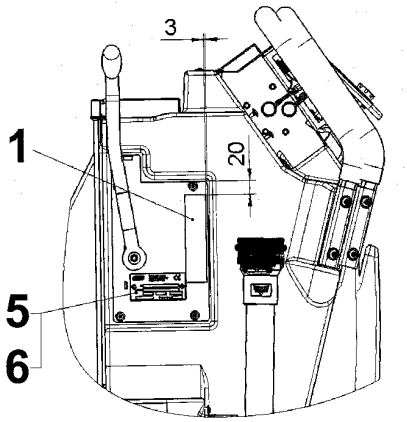

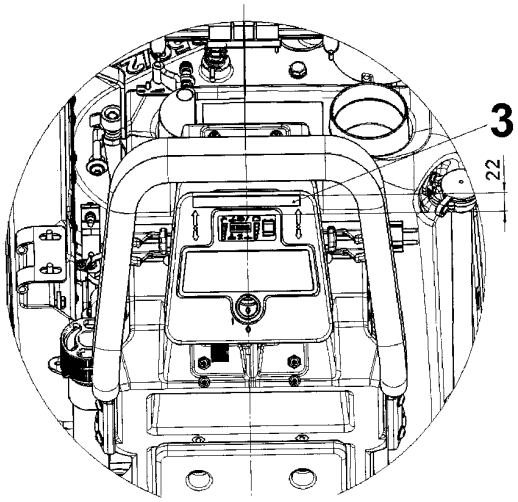

Phoenix 30 (99706234) Rev.00 18/01/08
99706234BT170 Decals

Item	Spare part number	Description	Qty.	Remarks
1	01170740	Decal	1	
2	03008520	Decal PHOENIX 30	2	
3	03008500	Decal PHOENIX SERIES	1	
4	03008510	Decal POWER BOSS	1	
5	03008410	Type plate POWERBOSS	1	
6	00504370	Blind rivet	2	

Phoenix 30 (99706234) Rev.00 18/01/08
99706234BT180 Cylindrical Brush Drive Head 70cm (27.55”)

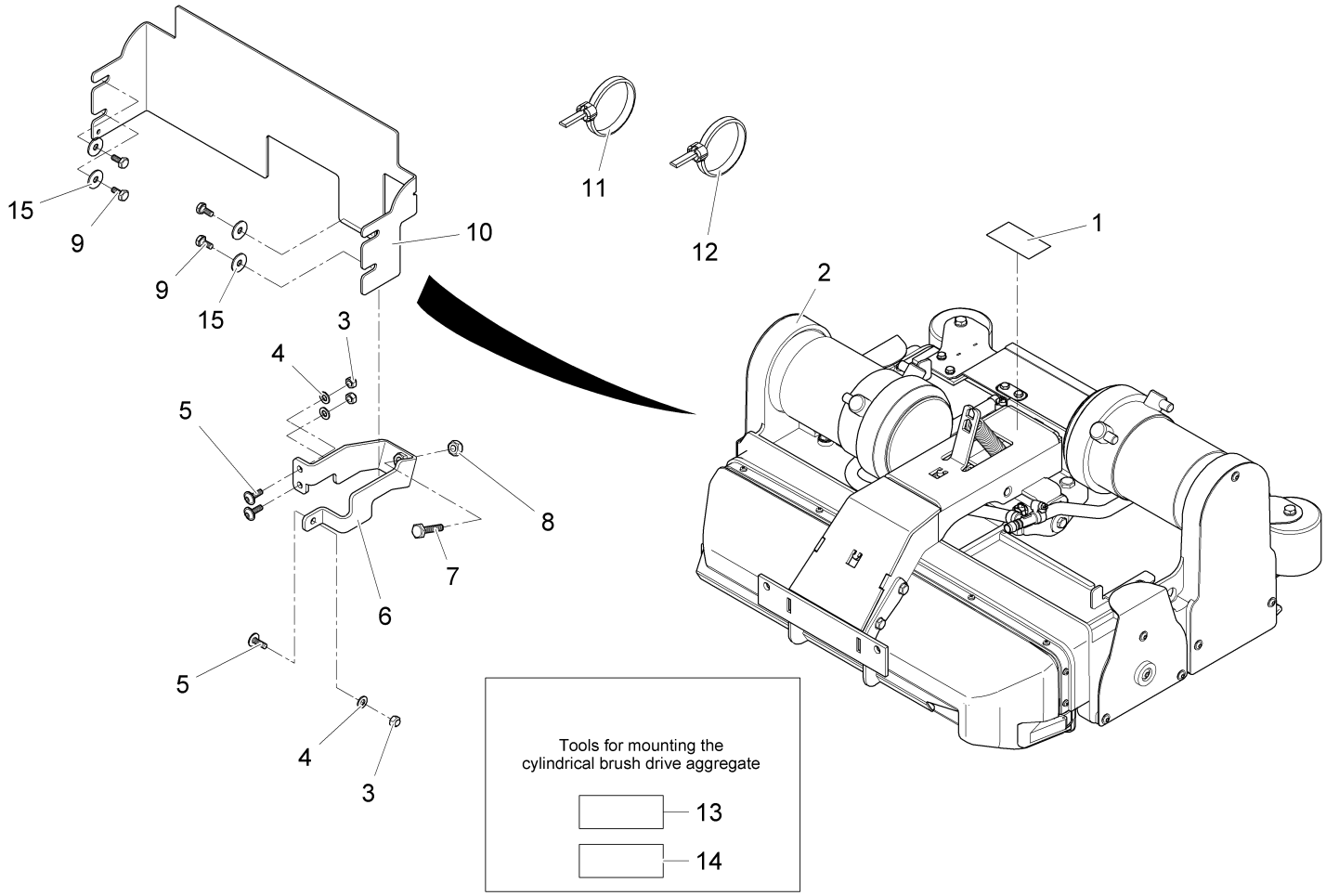

Phoenix 30 (99706234) Rev.00 18/01/08
99706234BT180 Cylindrical Brush Drive Head 70cm (27.55”)

Item	Spare part number	Description	Qty.	Remarks
1	01073530	Transparency	1	
2	99706234BT181	Cylindrical brush drive head cpl.	1	Do not order! see. sub-assemblies! BT181-1; BT181-2; BT181-3
3	00051510	Hexagon nut	2	
4	00053750	Washer	3	
5	01000670	Lens flange screw	3	
6	01170070	Retainer	1	
7	00053170	Hexagon screw	1	
8	00051500	Hexagon nut	1	
9	00053080	Hexagon screw	4	
10	01170080	Sheet metal	1	
11	00121150	Cable tie	6	
12	00967760	Cable tie	4	
13	03006790	Error reset tool	1	Not shown
14	03007950	Brush Adjusting kit	1	Not shown
15	00042900	Washer	4	

Phoenix 30 (99706234) Rev.00 18/01/08
99706234BT181-1 Cylindrical Brush Drive Head Cpl., Part 1

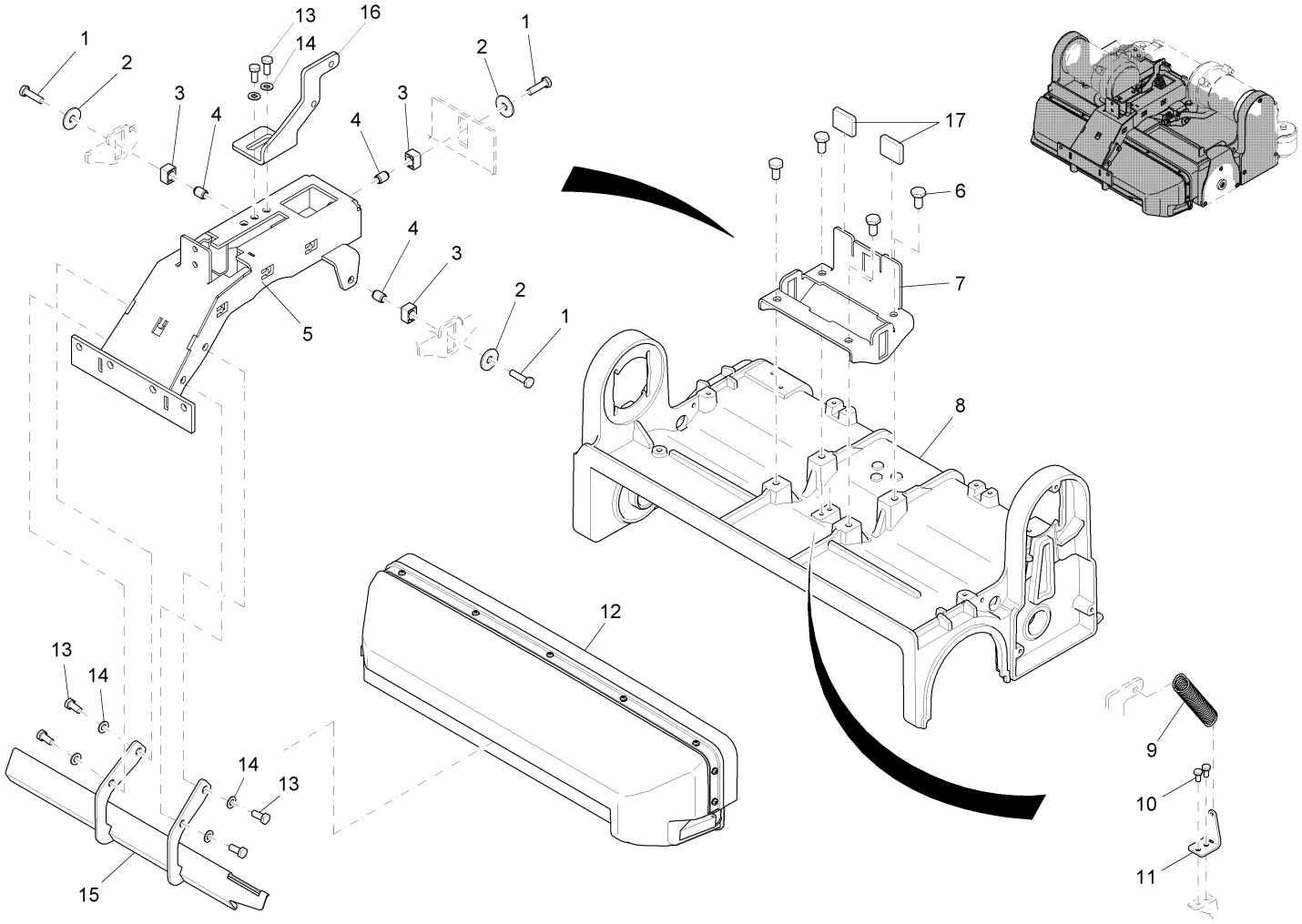

Phoenix 30 (99706234) Rev.00 18/01/08
99706234BT181-1 Cylindrical Brush Drive Head Cpl., Part 1

Item	Spare part number	Description	Qty.	Remarks
1	01078690	Hexagon screw	3	
2	01161070	Washer	3	
3	01078700	Slide block	3	
4	01077730	Bushing	3	
5	03007970	Rocker cylindrical brush	1	
6	01078720	Hexagon screw	4	
7	01170090	Retainer	1	
8	01170780	Housing	1	
9	01072680	Tension spring	1	
10	01071750	Hexagon screw	2	
11	01077890	Angle	1	
12	99706234BT181-1A	Debris hopper cpl.	1	Do not order! see sub-assembly!
13	00553690	Hex.bolt	6	
14	00053750	Washer	6	
15	01170540	Guide bar	1	
16	01170100	Spring holder	1	
17	01074240	Cap	2	

Phoenix 30 (99706234) Rev.00 18/01/08
99706234BT181-1A Debris Hopper Cpl.

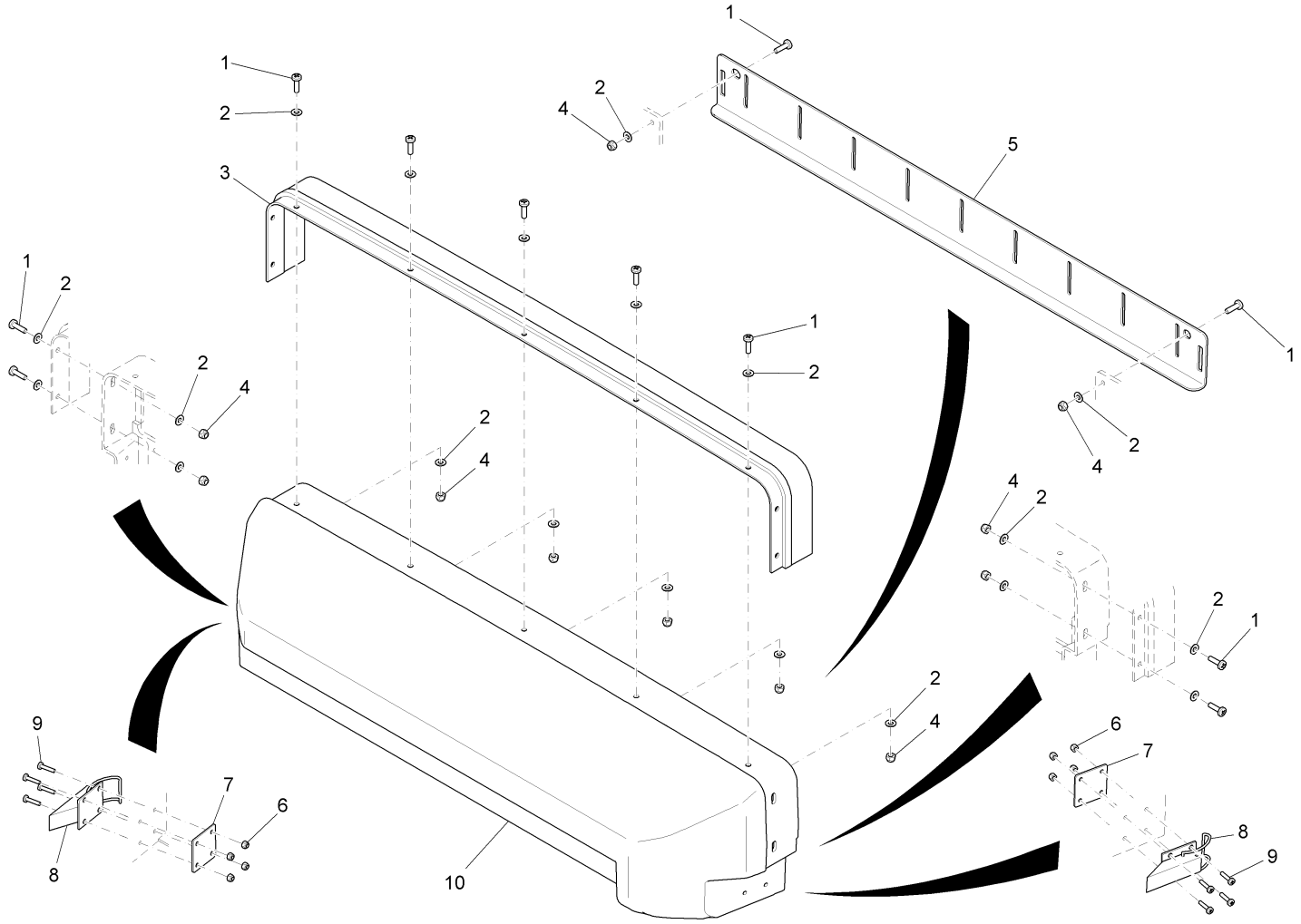

Phoenix 30 (99706234) Rev.00 18/01/08
99706234BT181-1A Debris Hopper Cpl.

Item	Spare part number	Description	Qty.	Remarks
1	01072260	Fillister-head screw	11	Phillips
2	00874720	Washer	20	
3	01072240	Brush rails	1	
4	00970190	Hexagon nut	11	
5	01072250	Panel apron	1	
6	01072270	Hex. Nut	8	
7	01076250	Plate	2	
8	01072220	Lock	2	
9	01072230	Fillister-head screw	8	Phillips
10	01072210	Debris hopper, cpl.	1	

Phoenix 30 (99706234) Rev.00 18/01/08
99706234BT181-2 Cylindrical Brush Drive Head Cpl., Part 2

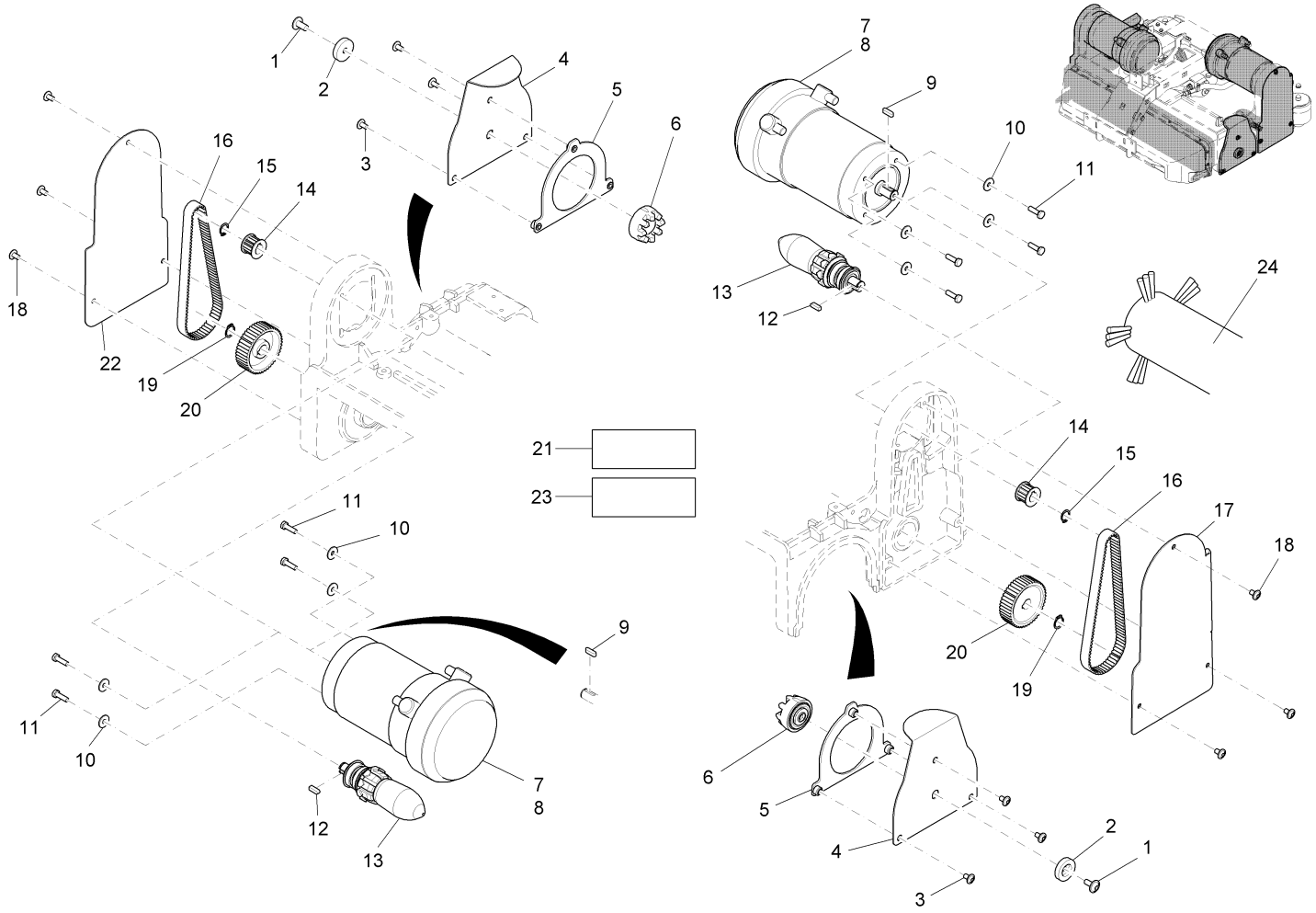

Phoenix 30 (99706234) Rev.00 18/01/08
99706234BT181-2 Cylindrical Brush Drive Head Cpl., Part 2

Item	Spare part number	Description	Qty.	Remarks
1	01074320	Lens flange screw	2	
2	01074330	Washer	2	
3	01072520	Lens flange screw	6	
4	01078760	Side cover	2	
5	01078770	Centering bend	2	
6	01074340	Bearing	2	
7	01072450	Motor	2	
8	00553060	Set (4pc.) carbon brush	4	
9	00022430	Feather key	2	
10	00135120	Washer	8	
11	00053020	Hexagon screw	8	
12	01072580	Feather key	2	
13	01072560	Carrier, cpl.	1	
14	01072460	Toothed belt pulley	2	
15	00022440	Retaining ring	2	
16	01072540	Toothed belt	2	
17	01170510	Sheet metal R.H.	1	
18	01072520	Lens flange screw	6	
19	00022340	Retaining ring	2	
20	01072570	Toothed belt pulley	2	
21	03007980	Wiring harness W13	1	
22	01078790	Sheet metal L.H.	1	
23	03007990	Wiring harness W14	1	
24	99709900	Set, cyl brush 150 Sic PA 6.12 K 500	1	Use on medium to heavy soiled flooring, SIC PA 6. 12, Kom 500

Phoenix 30 (99706234) Rev.00 18/01/08
01072560 Carrier, Cpl.

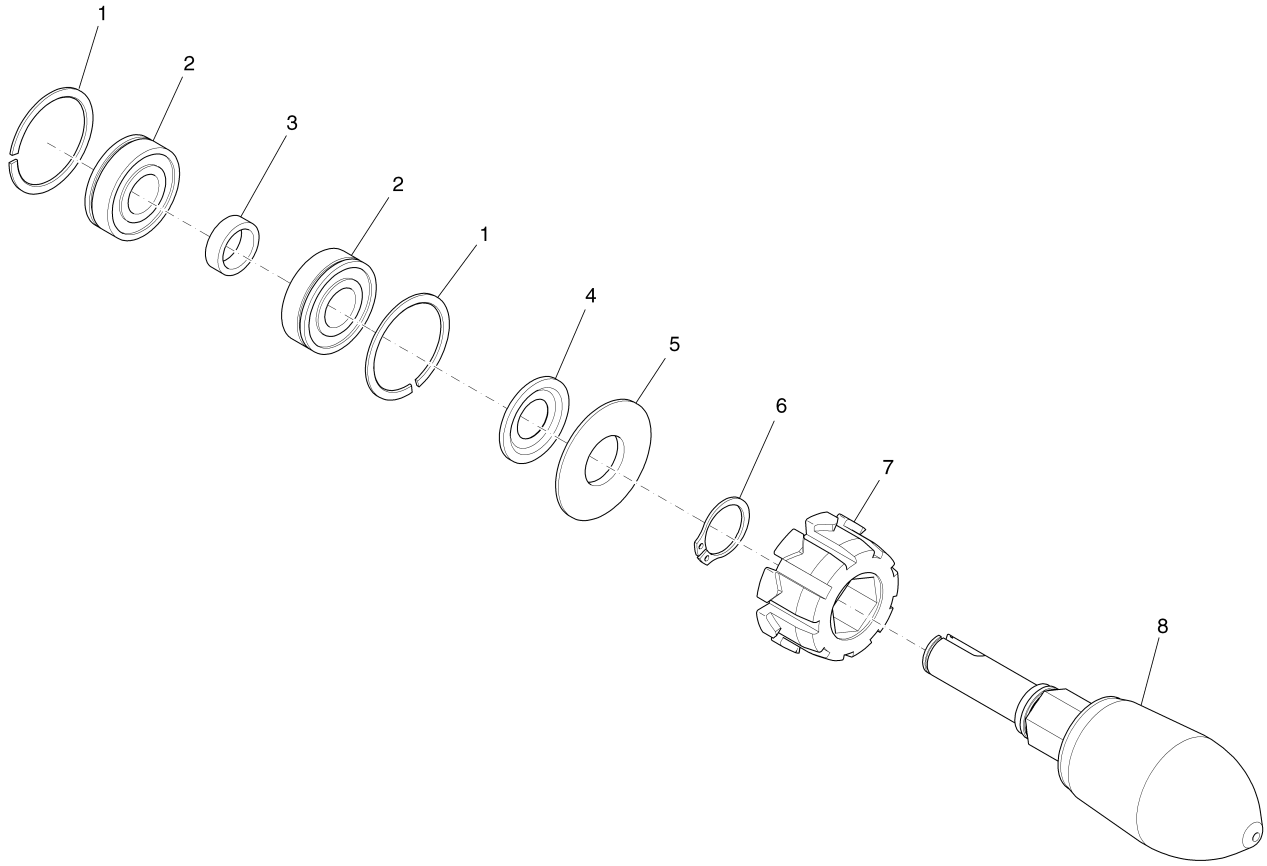

Phoenix 30 (99706234) Rev.00 18/01/08
01072560 Carrier, Cpl.

Item	Spare part number	Description	Qty.	Remarks
1	01078820	Circlip	2	
2	01076560	Grooved ball bearing	2	
3	01077520	Bushing	1	
4	00124220	Ring	1	
5	01077550	Bushing	1	
6	00054310	Retaining ring	1	
7	01077540	Bushing	1	
8	01077530	Retainer	1	

Phoenix 30 (99706234) Rev.00 18/01/08
99706234BT181-3 Cylindrical Brush Drive Head Cpl., Part 3

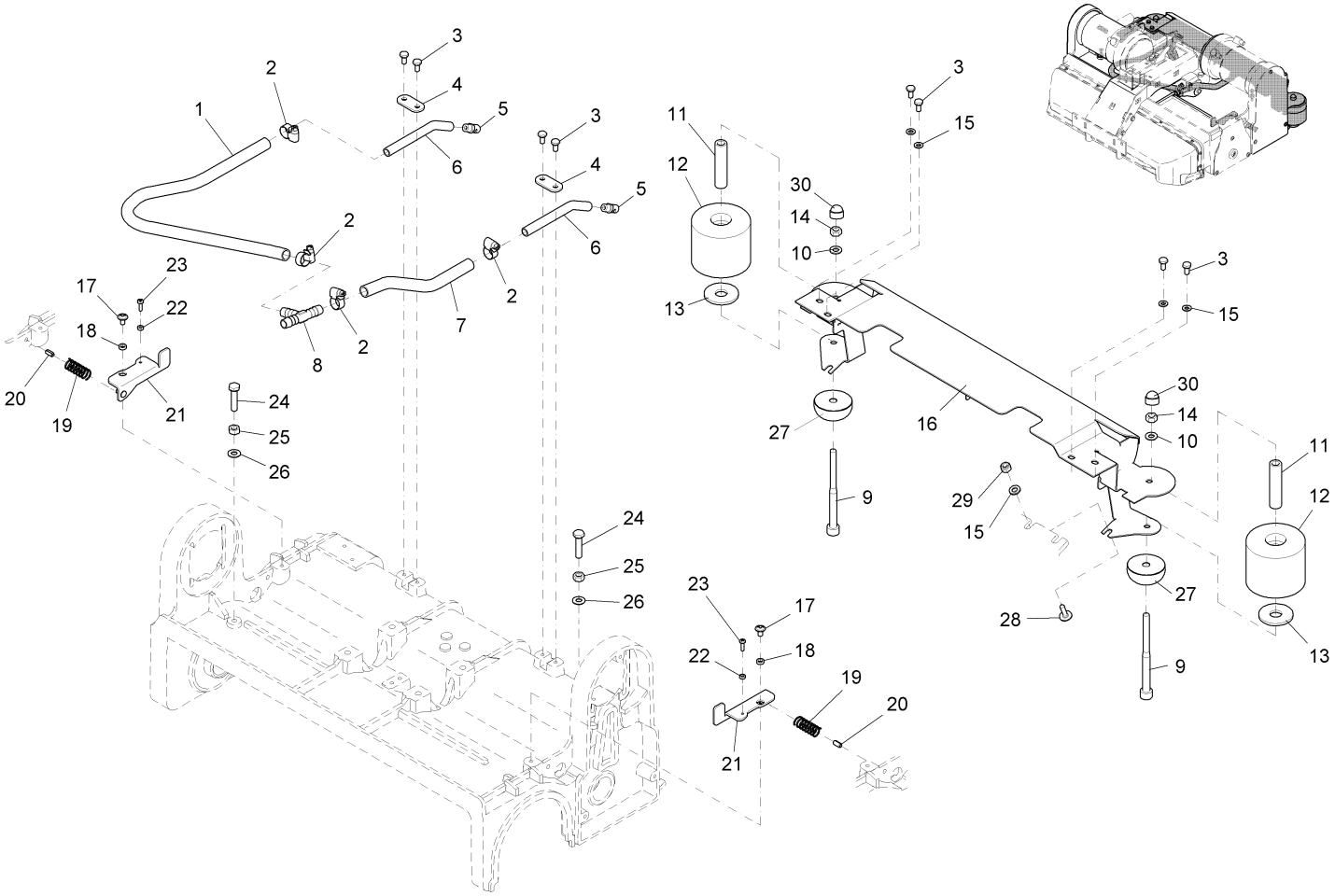

Phoenix 30 (99706234) Rev.00 18/01/08
99706234BT181-3 Cylindrical Brush Drive Head Cpl., Part 3

Item	Spare part number	Description	Qty.	Remarks
1	00171030	Hose	520mm	20.47”
2	00074300	Hose clamp	4	
3	01071750	Hexagon screw	8	
4	01072500	Clamping sheet metal	2	
5	01072640	Jet	2	
6	01072630	Pipe	2	
7	00171030	Hose	240mm	9.44”
8	00976160	T-piece	1	
9	01170110	Socket head screw	2	
10	00053750	Washer	4	
11	01078800	Pipe	2	
12	00976590	Roller	2	
13	00132610	Washer	2	
14	00051510	Hexagon nut	2	
15	00102150	Washer	6	
16	01170600	Cross beam	1	
17	01072520	Lens flange screw	2	
18	01073360	Bushing	2	
19	00550870	Pressure spring	2	
20	00107140	Dowel pin	2	
21	01072620	Lever, cpl.	2	
22	01072510	Hex. Nut	2	
23	01072260	Fillister-head screw	2	Phillips
24	00523810	Hex.bolt	2	
25	00971400	Hexagon nut	2	
26	00101550	Washer	2	
27	01170120	Stop	2	
28	01015340	Lens flange screw	2	
29	00051520	Hexagon nut	2	
30	00131610	Lens cap	2	

NOTES

NOTES

Revision D
Effective June 1, 2007
PowerBoss Made Simple Industrial Limited Warranty

PowerBoss warrants to the original purchaser/user that the product is free from defects in workmanship and materials under normal use. PowerBoss will, at its option, repair or replace without charge, parts that fail under normal use and service when operated and maintained in accordance with the applicable operation and instruction manuals. All warranty claims must be submitted through and approved by factory authorized repair stations.

This warranty does not apply to normal wear, or to items whose life is dependent on their use and care. Parts not manufactured by PowerBoss are covered by and subject to the warranties and/or guarantees of their manufacturers. Please contact PowerBoss for procedures in warranty claims against these manufacturers.

Special warning to purchaser -- Use of replacement parts not manufactured by PowerBoss or its designated licensees, will void all warranties expressed or implied. A potential health hazard exits without original equipment replacement.

All warranted items become the sole property of PowerBoss or its original manufacturer, whichever the case may be.

PowerBoss disclaims any implied warranty, including the warranty of merchantability and the warranty of fitness for a particular purpose. PowerBoss assumes no responsibility for any special, incidental or consequential damages.

This limited warranty is applicable only in the U.S.A. and Canada, and is extended only to the original user/purchaser of this product. Customers outside the U.S.A. and Canada should contact their local distributor for export warranty policies. PowerBoss is not responsible for costs or repairs performed by persons other than those specifically authorized by PowerBoss. This warranty does not apply to damage from transportation, alterations by unauthorized persons, misuse or abuse of the equipment, use of non-compatible chemicals, or damage to property, or loss of income due to malfunctions of the product. If a difficulty develops with this machine, you should contact the dealer from whom it was purchased.

This warranty gives you specific legal rights, and you may have other rights, which vary from state to state. Some states do not allow the exclusion or limitation of special, incidental or consequential damages, or limitations on how long an implied warranty lasts, so the above exclusions and limitations may not apply to you.

Warranty Information

	Travel*	Labor	Parts	Engine
Walk Behinds				
Battery sweepers	Ninety days	One year	One year	N/A
IC sweepers	Ninety days	One year	One year	Through manufacturer
Battery scrubbers	Ninety days	Two years	Three years	N/A
Riders				
Battery scrubbers	Ninety days	Two years	Three years/2000 hrs	N/A
IC sweeper/ scrubbers	Ninety days	Six months	Two years/2000 hrs	Two years/3000 hrs
IC sweepers	Ninety days	Six months	Four years/3000 hrs	Five years/3000 hrs
Exceptions				
Apex series sweepers	Ninety days	One year	One year/1000 hrs	One year/1000 hrs
6X sweeper	Ninety days	Six months	Two years/2000 hrs	Two years/2000 hours

Tank Bladders	Eight years/ no additional labor
Polypropylene Plastic Tanks	Ten years/ no additional labor
Batteries	0-3 months full replacement 4-12 prorated credit
Chargers	One-year replacement
Replacement Parts	Ninety days
Travel Time	*Two-hour cap

****Extended Warranties Available****

All above labor and travel reimbursed at 65% of the published shop rate.

PowerBoss®
The Power of Clean

“The Power of Clean”

PowerBoss Is A Full Line Manufacturer Of Sweepers and Scrubbers For Industrial Facilities.

PowerBoss,Inc 175 Anderson Street P.O. Box 1227- Aberdeen North Carolina 28315

Phone: 800-982-7141 - Fax: 1-800-277-7141 Local: 910-944-2105 Fax: 910-944-7409 e-mail:techsupport@powerboss.com

A Member Of The Hako Group